ENGLISH

SIMPLE MANUAL

HIGH POWER SPEAKER SYSTEM

Please read this manual carefully before operating your set and retain it for future reference.
To view the instructions of advanced features, visit http://www.lg.com and then download Owner's Manual. Some of the content in this manual may differ from your unit.

MODEL

RN7

MFL71690731
2004_Rev02

www.lg.com

Copyright © 2022 LG Electronics Inc. All Rights Reserved.



Top panel

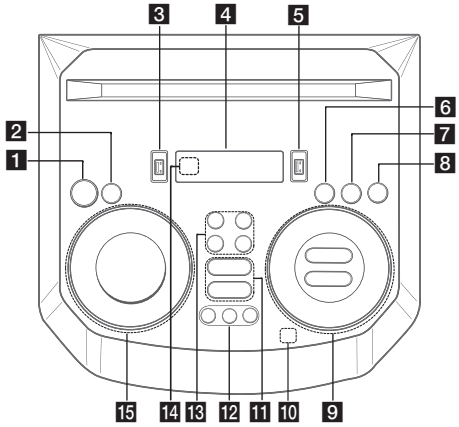

1 ⏻ (Standby)
Turns the power on or off.

2 **USB REC / DEMO**
- Records to USB.
- Stops recording.
- In power off status, if you press **USB REC / DEMO**, show demo mode.

3 USB 1 Port
You can play sound files by connecting the USB device.

4 Display window

5 USB 2 Port
You can play sound files by connecting the USB device.

6 **F** (Function)
Selects the function and input source.

7 **LIGHTING**
Selects the lighting mode.

8 **TWIN**
Connects two units for TWIN mode in WIRELESS PARTY LINK.

9 ⏮/⏭ (Skip/Search)
- Skips backward or forward.
- Searches for a section within a file.
- Selects the radio stations.

⏯ (Play/Pause)
- Starts or pauses playback.
- Selects stereo/mono.
- **Bluetooth** connection lock (BT LOCK): Select the **Bluetooth** function by pressing **F** repeatedly. And long press ⏯ to limit **Bluetooth** connection to only BT and LG TV.

AUTO DJ
Selects the AUTO DJ mode.

VOL (Volume) **-/+**
Adjusts speaker volume.

MIC (Microphone) **/ GUITAR -/+**
Adjusts Microphone volume or Guitar volume.

10 (Auto Music Play)
Plays the audio currently playing by tagging the mobile (with "LG XBOOM" App) to this unit. (Android Only)

11 **VOICE CANCELLER**
You can reduce the vocal tones during music playback from various input sources.

EQ
Chooses sound impressions.

12 **CLUB, DRUM, USER** (DJ PAD)
Selects CLUB, DRUM or USER sound effect to mix.
(If you want to use USER, you have to register a source with "LG XBOOM" app. (Android Only))

1, 2, 3 (DJ PAD)
Press a desired sound pad.

13 **MIC** (Microphone) **ECHO**
Selects ECHO mode.

VOCAL EFFECTS
Selects various vocal effects mode.

KEY CHANGER (♭/♯)
Changes the key to suit your vocal range.

14 Remote sensor

15 **SPECIAL EQ / BASS BLAST** (or **BASS BLAST+**)
- Chooses special equalizer.
- Press and hold to select BASS (or BASS+) effect directly.

SEARCH
Moves to folder or file in selection mode.

OK
Selects a folder when searching a file.

USER EQ
Selects the equalizer created by your own.

Multi jog
- Searches a folder or a file.
- Turns clockwise or counterclockwise to control the USER EQ level.
- Chooses special equalizer.

Front panel / Rear panel

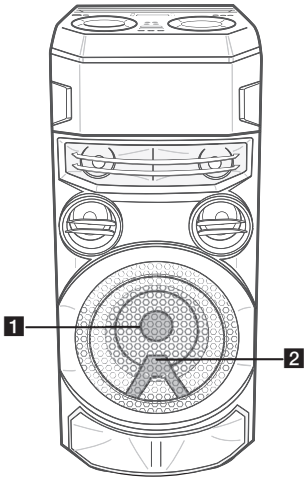

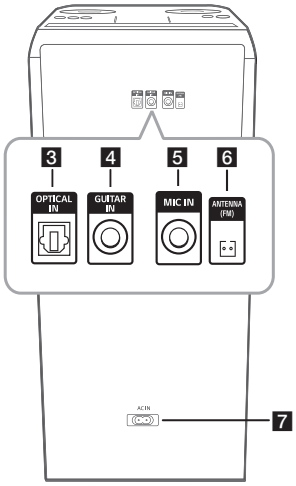

1 Lighting
2 Remote sensor

3 **OPTICAL IN**: Connect an optical device.
4 **GUITAR IN:** Connect a guitar.
5 **MIC** (Microphone) **IN:** Connect a microphone.
6 **ANTENNA** (FM)
7 **AC IN** socket

Make sure to properly align and connect the optical cable; improper alignment may cause damage to the jack.

Controller App

Android iOS

Download the **LG XBOOM** App to your device.

LG Sound Sync



For more information, download the online owner's manual. **http://www.lg.com**

Additional Information

Specifications

Power Requirements	Refer to the main label on the unit.
Power Consumption	Refer to the main label on the unit.
Dimensions (W x H x D)	Approx. 330.0 mm x 785.0 mm x 344.0 mm
Bus Power Supply (USB)	5 V ⎓ 500 mA

Design and specifications are subject to change without notice.

Caution

- Connect the power cord to wall outlet directly if possible. Or when you use an extension cable, it is highly recommended to use an extension cable of 110 V / 15 A or 230 V / 15 A, otherwise the unit may not operate properly because of the lack of power supply.
- Do not overload the extension cord with excessive electrical load.

Note

- Do not look directly at the light emitting part when the LIGHTING is turned on.
- If the illumination brightness is glaring, switch on the room lights or turn off the LIGHTING of the unit.

Replacement of battery

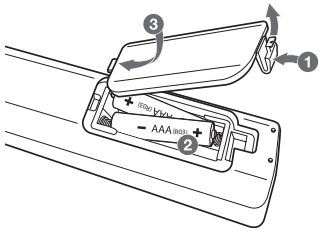

IMPORTANT SAFETY NOTICE

The cord grip for the plug fitted to this product is built into the existing power cord as supplied. If, for any reason you need to shorten the cord.

DO NOT RE-USE THE PLUG.

A new plug must be used to ensure your continued safety by securing the plug to the power cord in accordance with Plug & Socket Regulations 1994.



SAFETY PRECAUTION

THIS EQUIPMENT MUST BE DISCONNECTED FROM THE MAINS POWER SUPPLY WHEN IT IS NOT IN USE. DO NOT ALLOW THIS UNIT TO BE EXPOSED TO RAIN OR MOISTURE.

CAUTION

TO PREVENT ELECTRIC SHOCK, DO NOT REMOVE THE COVER. NO USER SERVICEABLE PARTS ARE INSIDE. REFER SERVICING TO QUALIFIED PERSONNEL.

PRECAUTIONS

Please read these precautions before you operate this unit.

- Avoid extreme heat, cold, moisture and dust.
- Avoid using near a magnetic field. (This will adversely affect the units performance.)
- Be careful when the surface of the case is wiped with a volatile agent such as benzene, alcohol, thinner, etc. or a chemically processed cloth, the surface finish may deteriorate or its coating may peel.
- Use the unit only in a horizontal position, and do not place anything heavy on it.
- Keep the unit away from flower vases, tubs, sinks, etc. If any liquids should spill into unit, serious damage could occur. In that case, please consult qualified service personnel.
- Do not obstruct the ventilation holes: they prevent overheating. Even soft materials such as paper and cloth may prevent proper ventilation of the unit.
- **There are no serviceable parts inside. For service, please contact your service centre.**