LG
Life's Good

ENGLISH
ITALIANO
ESPAÑOL
FRANÇAIS
DEUTSCH
ΕΛΛΗΝΙΚΆ
PORTUGUESE

INSTALLATION MANUAL

AIR CONDITIONER

- Please read this installation manual completely before installing the product.
- Installation work must be performed in accordance with the national wiring standards by authorized personnel only.
- Please retain this installation manual for future reference after reading it thoroughly.

TYPE : THERMA V™
(Air-to-Water Heat Pump)

MODEL : CH Series

P/NO : MFL62567801

www.lg.com

TABLE OF CONTENTS

REMARK : ALL CONTENTS OF THIS MANUAL ARE SUBJECT TO CHANGE WITHOUT NOTICE.
TO GET THE LATEST INFORMATION, PLEASE VISIT LG ELECTRONICS WEB SITE.
www.lgservice.com

1. Safety Precautions

To prevent injury to the user or other people and property damage, the following instructions must be followed.

■ Be sure to read before installing the unit.
■ Be sure to observe the cautions specified here as they include important items related to safety.
■ Incorrect operation due to ignoring instruction will cause harm or damage. The seriousness is classified by the following indications.

⚠WARNING	This symbol indicates the possibility of death or serious injury.
⚠CAUTION	This symbol indicates the possibility of injury or damage to properties only.

■ Meanings of symbols used in this manual are as shown below.

⃠	**Be sure not to do.**
❗	**Be sure to follow the instruction.**

⚠WARNING

■ Installation

Do not use a defective or underrated circuit breaker. Use this appliance on a dedicated circuit.

- There is risk of fire or electric shock.

For electrical work, contact the dealer, seller, a qualified electrician, or an Authorized Service Center.

- There is risk of fire or electric shock.

Always ground the unit.

- There is risk of fire or electric shock.

Install the panel and the cover of control box securely.

- There is risk of fire or electric shock.

Always install a dedicated circuit and breaker.

- Improper wiring or installation may cause fire or electric shock.

Use the correctly rated breaker or fuse.

- There is risk of fire or electric.

Do not modify or extend the power cable.

- There is risk of fire or electric shock.

Do not install, remove, or reinstall the unit by yourself (customer).

- There is risk of fire, electric shock, explosion, or injury.

Be cautious when unpacking and installing the unit.

- Sharp edges could cause injury. Especially careful on the unit edges and the fins on the heat exchanger.

For antifreeze, always contact the dealer or an authorized service center.

- Almost the antifreeze is a toxic product.

The refrigerant of this product is R407C.

- The installation tool such as manifold gauge should be complied with R407C.

For installation, always contact the dealer or an Authorized Service Center.

- There is risk of fire, electric shock, explosion, or injury.

Do not install the unit on a defective installation stand.

- It may cause injury, accident, or damage to the unit.

Be sure the installation area does not deteriorate with age.

- If the base collapses, the unit could fall with it, causing property damage, unit failure, and personal injury.

■ Operation

Do not let the unit run for a long time when the humidity is very high and a door or a window is left open.

- Moisture may be condensed and wet or damage furniture.

Take care to ensure that power cable could not be pulled out or damaged during operation.

- There is risk of fire or electric shock.

Do not place anything on the power cable.

- There is risk of fire or electric shock.

Do not plug or unplug the power supply plug during operation.

- There is risk of fire or electric shock.

Do not touch (operate) the unit with wet hands.

- There is risk of fire or electric shock.

Do not place a heater or other appliances near the power cable.

- There is risk of fire or electric shock.

Do not allow water to run into electric parts.

- There is risk of fire, failure of the unit, or electric shock.

Do not store or use flammable gas or combustibles near the unit.

- There is risk of fire or failure of unit.

Do not use the unit in a tightly closed space for a long time.

- Oxygen deficiency could occur.

When flammable gas leaks, turn off the gas and open a window for ventilation before turn the unit on.

- There is risk of explosion or fire.

If strange sounds, or small or smoke comes from unit, turn the breaker off or disconnect the power supply cable.

- There is risk of electric shock or fire.

Stop operation and close the window in storm or hurricane. If possible, remove the unit from the window before the hurricane arrives.

- There is risk of property damage, failure of unit, or electric shock.

Do not open the front cover of the unit while operation. (Do not touch the electrostatic filter, if the unit is so equipped.)

- There is risk of physical injury, electric shock, or unit failure.

When the unit is soaked (flooded or submerged), contact an Authorized Service Center.

- There is risk of fire or electric shock.

Be cautious that water could not be poured to the unit directly.

- There is risk of fire, electric shock, or unit damage.

Ventilate the unit from time to time when operating it together with a stove, etc.

- There is risk of fire or electric shock.

Turn the main power off when cleaning or maintaining the unit.

- There is risk of electric shock.

Take care to ensure that nobody could step on or fall onto the unit.

- This could result in personal injury and unit damage.

For installation, always contact the dealer or an Authorized Service Center.

- There is risk of fire, electric shock, explosion, or injury.

If the unit is not used for long time, we strongly recommend not to switch off the power supply to the unit.

- There is risk of water freezing.

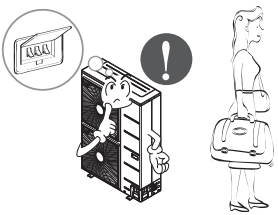

⚠ CAUTION

■ Installation

Always check for gas (refrigerant) leakage after installation or repair of unit.

- Low refrigerant levels may cause failure of unit.

Do not install the unit where it will be exposed to sea wind (salt spray) directly.

- It may cause corrosion on the unit. Corrosion, particularly on the condenser and evaporator fins, could cause unit malfunction or inefficient operation.

Keep level even when installing the unit.

- To avoid vibration or water leakage.

Do not install the unit where the noise or hot air from the unit could damage the neighborhoods.

- It may cause a problem for your neighbors.

Use two or more people to lift and transport the unit.

- Avoid personal injury.

■ Operation

Do not lay on the cooled floor for long time when the unit is in cooling operation.

- This could harm to your health.

Do not use the unit for special purposes, such as preserving foods, works of art, etc. It is a consumer unit, not a precision refrigeration system.

- There is risk of damage or loss of property.

Do not block the outlet of air flow.

- It may cause unit failure.

Use a soft cloth to clean. Do not use harsh detergents, solvents, etc.

- There is risk of fire, electric shock, or damage to the plastic parts of the unit.

Do not step on or put anything on the unit.

- There is risk of personal injury and failure of unit.

Do not insert hands or other objects into the unit while it is operating.

- There are sharp and moving parts that could cause personal injury.

Use a firm stool or ladder when cleaning or maintaining the unit.

- Be careful and avoid personal injury.

2. Installation Parts

Thank you for choosing LG Electronics Air-to-Water Heat Pump THERMAV.
Before starting installation, please make it sure that all parts are found inside the unit box.

Item	Image	Quantity
Installation Manual		1
Owner's Manual		1
Strainer	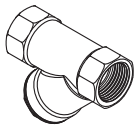	1
Shut-Off Valve	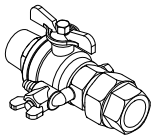	2
Remote Cotroller	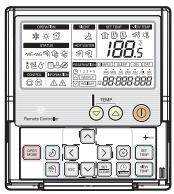	1
Cable		1

3. General Information

With advanced inverter technology, THERMAV™ is suitable for applications like under floor heating, under floor cooling, and hot water generation. By Interfacing to various accessories user can customize the range of the application.

In this chapter, general information of THERMAV™ is presented to identify the installation procedure. Before beginning installation, read this chapter carefully and find helpful information on installation.

Model Information

Model name and related information

Unit	Capacity		Power Source(unit)
	Heating(kW*1)	Cooling(kW*2)	
CHBW146A1	14	14	1~ 220-240 V 50 Hz
CHBW126A1	12	12	1~ 220-240 V 50 Hz
CHBW096A1	10	10	1~ 220-240 V 50 Hz

*1 : tested under Eurovent Heating condition (water temperature 30°C → 35°C at outdoor ambient temperature 7°C / 6°C)

*2 : tested under Eurovent Cooling condition (water temperature 23°C → 18°C at outdoor ambient temperature 35°C / 24°C)

Accessories

To extend the functionality of THERMAV , there are various external auxiliary apparatus called as "accessories."

They are classified by "accessories" and "3rd party accessories" according to the manufacturer. Accessories are presented LG Electronics, and 3rd party accessories are presented by related manufacturers.

Accessories supported by LG Electronics

Item	Purpose	Model
Sanitary Water Tank Install Kit	To operate with sanitary water tank	PHLTB
Remote Air Sensor	To control by air temperature	PQRSTA0
Dry Contact	To receive on & off external signal	PQDSA (Installed)
Sanitary Water Tank	To generate and store hot water	PHS02060310 : 200 liter, Single Heating Coil, 1~ 230 V 50 Hz 3 kW Electric Heater PHS02060320 : 200 liter, Double Heating Coil, 1~ 230 V 50 Hz 3 kW Electric Heater PHS03060310 : 300 liter, Single Heating Coil, 1~ 230 V 50 Hz 3 kW Electric Heater PHS03060320 : 300 liter, Double Heating Coil, 1~ 230 V 50 Hz 3 kW Electric Heater
Electric Heater (Air Vent)	To generate additional heat energy	AHEH0462A : 1~ 230 V 50 Hz 4 kW AHEH0662A : 1~ 230 V 50 Hz 6 kW

Accessories supported by 3rd party Companies

Item	Purpose	Specification
Thermostat	To control by air temperature	Heating-Only type (1~ 230 V or 1~ 24 V) Cooling/Heating type (1~ 230 V or 1~ 24 V AC with Mode selection switch)
3way valve and actuator	To control water flow for hot water heating or floor heating	3 wire, SPDT (Single Pole Double Throw) type, 1~ 230 V

Typical Installation Example

⚠ CAUTION

If is installed with pre-existing boiler, the boiler and THERMAV should not be operated together. If entering water temperature of THERMAV is above 65°C, the system will stop operation to prevent mechanical damage of the unit. For detailed electric wiring and water piping, please contact authorized installer.

Some installation scenes are presented for example. As these scenes are conceptual figures, installer should optimize the installation scene according to the installation conditions.

CASE 1: Connecting Heat Emitters for Heating and Cooling

(Under floor loop, Fan Coil Unit, and Radiator)

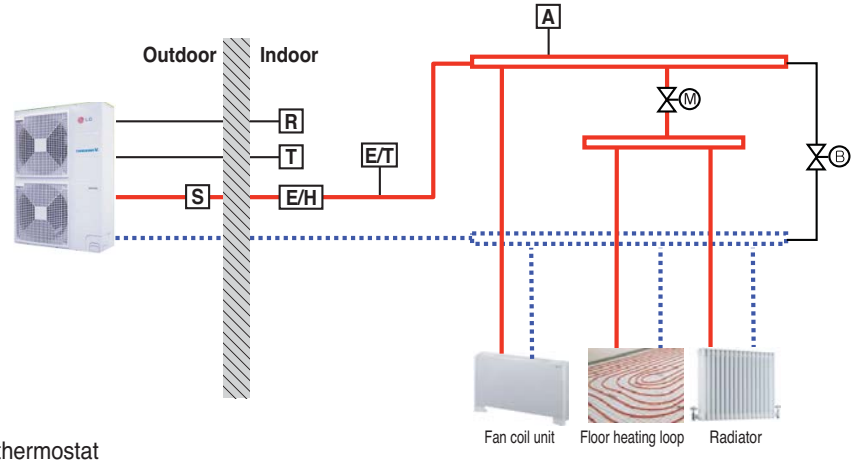

Note:

- Room thermostat
  - Type of thermostat and specification should be complied with chapter 6 of THERMAV installation manual.
- 2way valve
  - It is important to install 2way valve to prevent dew condensation on the floor and radiator while cooling mode.
  - Type of 2way valve and specification should be complied with chapter 6 of THERMAV installation manual.
  - 2way valve should be installed at the supply side of the collector.
- By-pass valve
  - To secure enough water flow rate, by-pass valve should be installed at the collector.
  - By-pass valve should guarantee minimum water flow rate in any case. Minimum water flow rate is described in water pump characteristics curve.

—	High Temperature	T	Room Thermostat(Field supply)	B	By-pass valve(Field supply)
·····	Low Temperature	M	2way valve (Field supply)	R	Remote Controller
E/T	Expansion Tank	S	Strainer(Mesh : 1mm*1mm)	A	Air Vent
E/H	Electric Heater				

CASE 2: Connecting Sanitary Water Tank

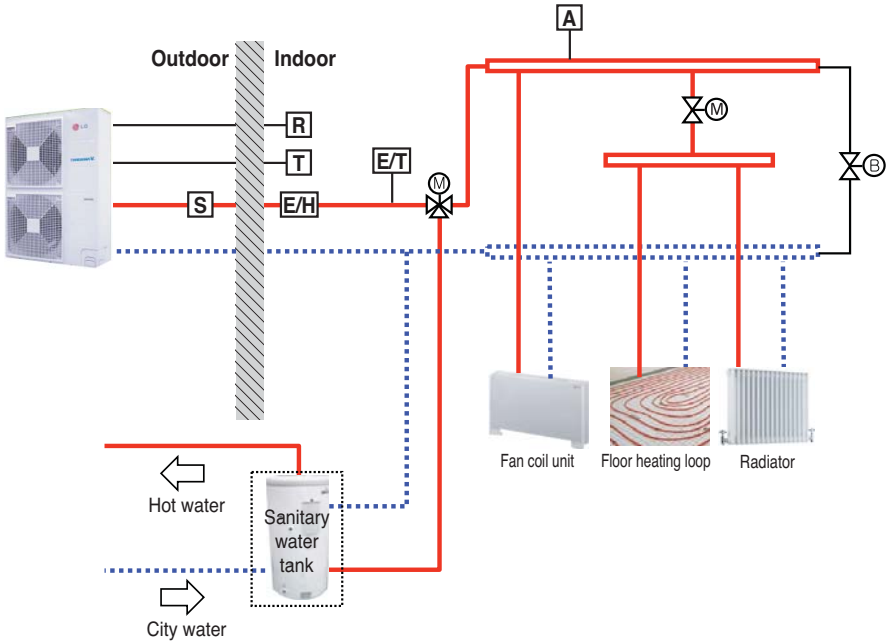

Note:

• Electric Heater
- Type of electric heater and specification should be complied with chapter 6 of THERMAV installation manual.

• Sanitary water tank
- It should be equipped with internal electric heater to generate sufficient heat energy in very cold season.

• 3way valve
- Type of 3way valve and specification should be complied with chapter 6 of THERMAV installation manual.

High Temperature		T	Room Thermostat(Field supply)	M	3way valve (Field supply)
Low Temperature		M	2way valve (Field supply)	R	Remote Controller
E/T	Expansion Tank	B	By-pass valve(Field supply)	S	Strainer(Mesh : 1mm*1mm)
A	Air Vent	E/H	Electric Heater		

Cycle Diagram

As THERMAV is Air-to-Water Heat Pump, there are two different fluids cycling inside the system : one is refrigerant, and the other is water. The refrigerant cycle and the water cycle are shown below.

Refrigerant Cycle

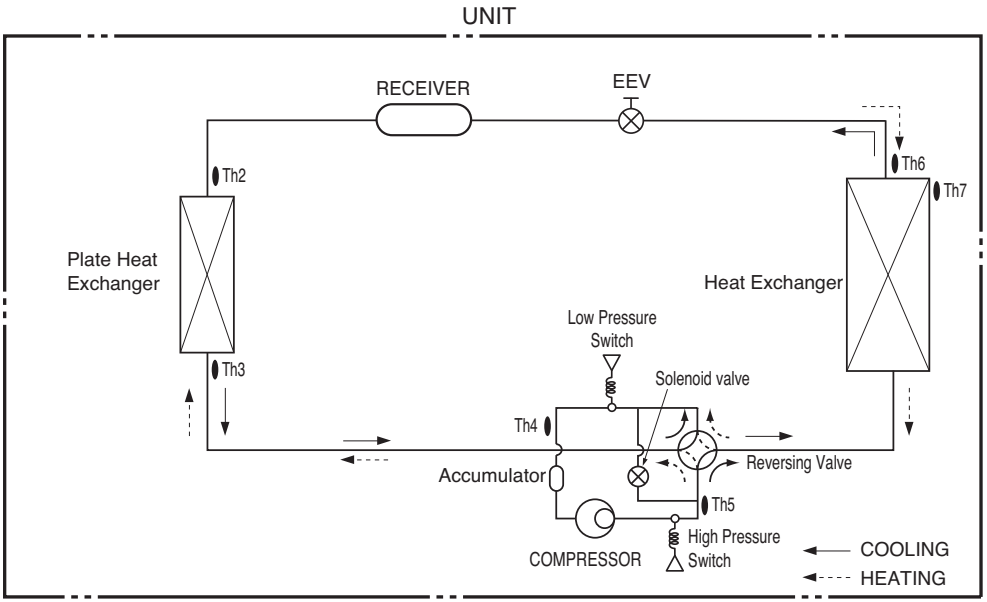

Description

Symbol	Meaning	PCB Connector	Remarks
Th1	Remote air temperature sensor	CN_ROOM	- Optional accessory (being sold separately) - Not shown in diagram
Th2	Inlet evaporator temperature sensor	CN_PIPE	- Meaning is expressed based on Cooling mode.
Th3	Outlet evaporator temperature sensor	CN_PIPE/O	
Th4	Compressor-suction pipe temperature sensor	CN_TH3	- Th4 and Th5 are connected at 4 pin type connector CN_TH3.
Th5	Compressor-discharge pipe temperature Sensor	CN_TH3	
Th6	Condenser temperature sensor	CN_TH2	- Description is expressed based on Cooling mode. - Th6 and Th7 are connected at 4 pin type connector CN_TH2
Th7	Air temperature sensor	CN_TH2	
EEV	Electronic Expansion Valve	CN_LEV1	-

Water cycle

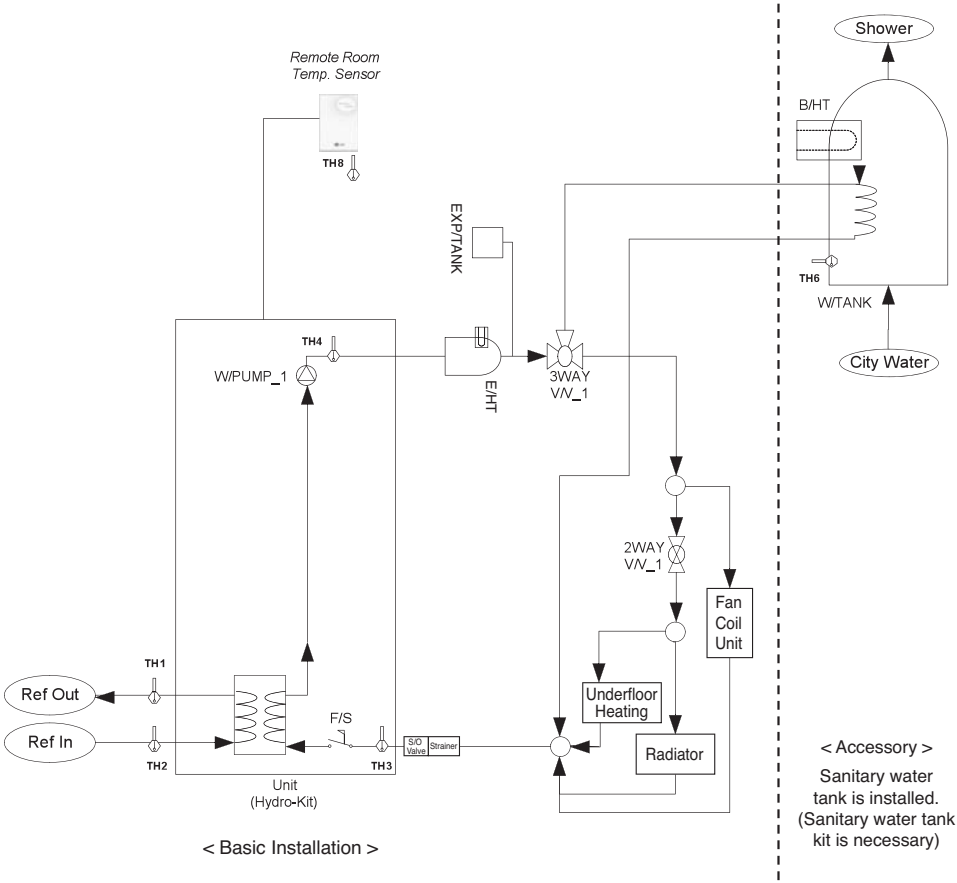

< Basic Installation >

Description

Category	Symbol	Meaning	PCB Connector	Remarks
Unit	TH1	Refrigerant temperature sensor. (Gas side)	CN_PIPE/OUT	- Meaning is expressed based on Cooling mode.
	TH2	Refrigerant temperature sensor. (Liquid side)	CN_PIPE	
	TH3	Entering Water temperature sensor.	CN_TH3	- TH3 and TH4 are connected at 6 pin type connector CN_TH3.
	TH4	Leaving water temperature sensor.		
	F/S	Flow Switch.	CN_FLOW1	
	W_PUMP1	Internal Water Pump.	CN_W/PUMP(A)	- Operating power(1~ 230V 50Hz) of internal water pump is supplied by the connector.
	TH8	Remote Air temperature sensor.	CN_ROOM	- Optional accessory. (sold separately) - Model : PQRSTA0.
	CTR/PNL	Remote Controller.	CN_REMO	
	S/O Valve	Shut-Off Valve.	(no connector)	To drain or to block water when pipe connecting.
	Strainer	Strainer.	(no connector)	Filtering and stacking particles inside circulating water.
Water Heating	W/TANK	Sanitary Water Tank.	(no connector)	- 3rd party accessory and Field installation. (sold separately) - Generating and storing sanitary hot water by AWHP or built-in electric heater.
	B/HT	Electric Heater.	CN_B/HEAT(A)	- 3rd party accessory and Field installation. (usually built-in at W/TANK) - Supplying additional water heating capacity.
	3WAY V/V_1	- Flow control for water which is leaving from unit. - Flow direction switching between under-floor and water tank.	CN_3WAY(A)	- 3rd party accessory and Field installation. (sold separately) - SPDT type 3way valve is supported.
	CITY WATER	Water to be heated by unit and B/HT of W/TANK.	(no connector)	- Field installation.
	SHOWER	Water supplied to end-user.	(no connector)	- Field installation.
	TH6	W/TANK water temperature sensor.	CN_TH4	- TH6 is a part of sanitary water tank kit. (Model:PHLTA)

Parts and Dimensions

Model : CHBW146A1
CHBW126A1
CHBW096A1

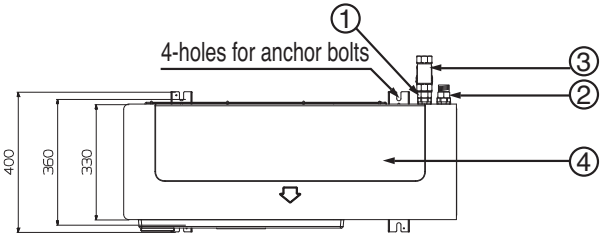

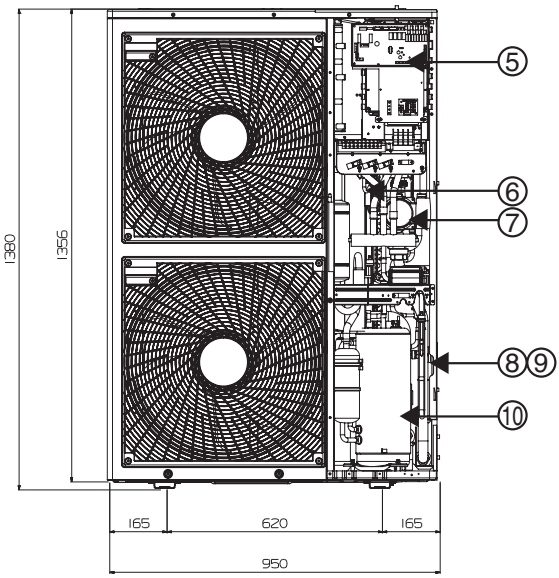

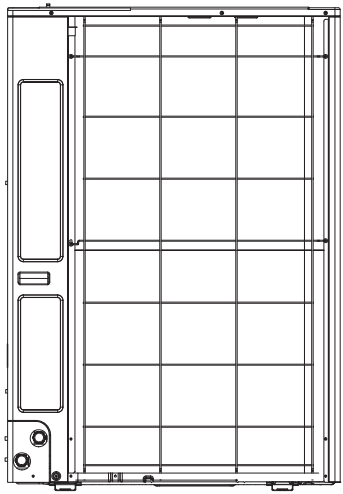

Description

No	Name	Remarks
1	Entering Water Pipe	Male PT 1 inch
2	Leaving Water Pipe	Male PT 1 inch
3	Strainer	Filtering and stacking particles inside circulating water
4	Top Cover	-
5	Control Box	PCB and terminal blocks
6	Plate Heat Exchanger	Heat exchange between refrigerant and water
7	Water Pump	-
8	Pressure Gage	Indicates circulating water pressure
9	Safety Valve	Open at water pressure 3 bar
10	Compressor	-

Control Parts

Control Box

Model : CHBW146A1
CHBW126A1
CHBW096A1

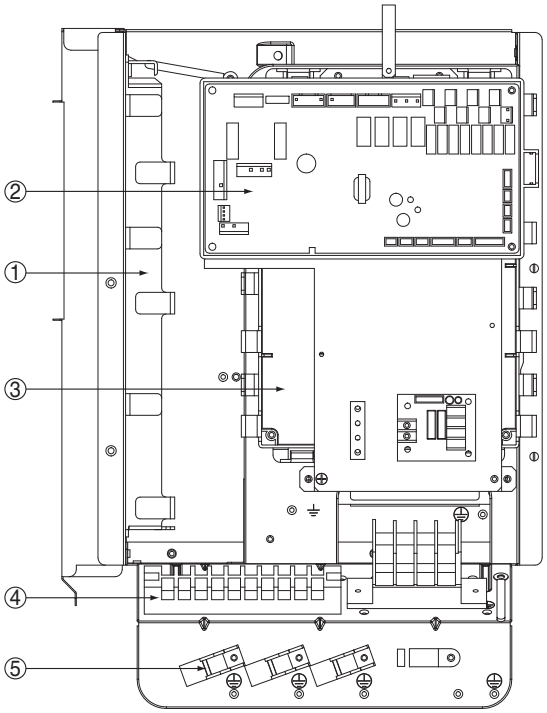

Description

No	Name	Remarks
1	Inverter PCB Assembly	Inverter PCB.
2	Main PCB Assembly 1	This PCB controls the functioning of the unit.
3	Main PCB Assembly 2	This PCB controls the cycle parts of the unit.
4	Terminal Block	The terminal blocks allow easy connection of field wiring.
5	Cord Clamp	-

Remote Controller

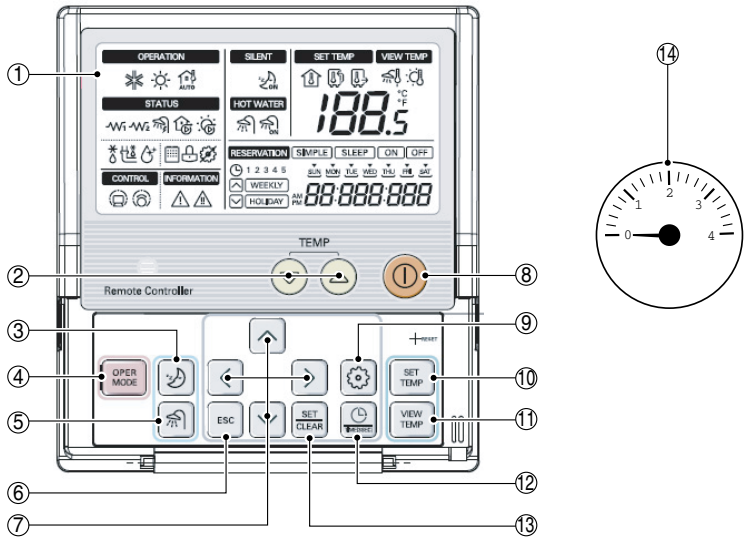

No	Name
1	Display
2	Change Temperature Button
3	Silent Mode On / Off Button
4	Operation Mode Selection Button
5	Water Heating Enable / Disable Button
6	ESC Button
7	Direction Button (Up, Down, Left, Right)
8	Power Button
9	Function Setting Button
10	Temperature Setting Mode Button
11	Temperature View Mode Button
12	Programming Button
13	Set / Clear button
14	Pressure gage

※ Some functions may not be operated and displayed depending on the model.

Wiring Diagram : Including Field Wiring (Model : CHBW096A1, CHBW126A1, CHBW146A1)

CIRCUIT DIAGRAM

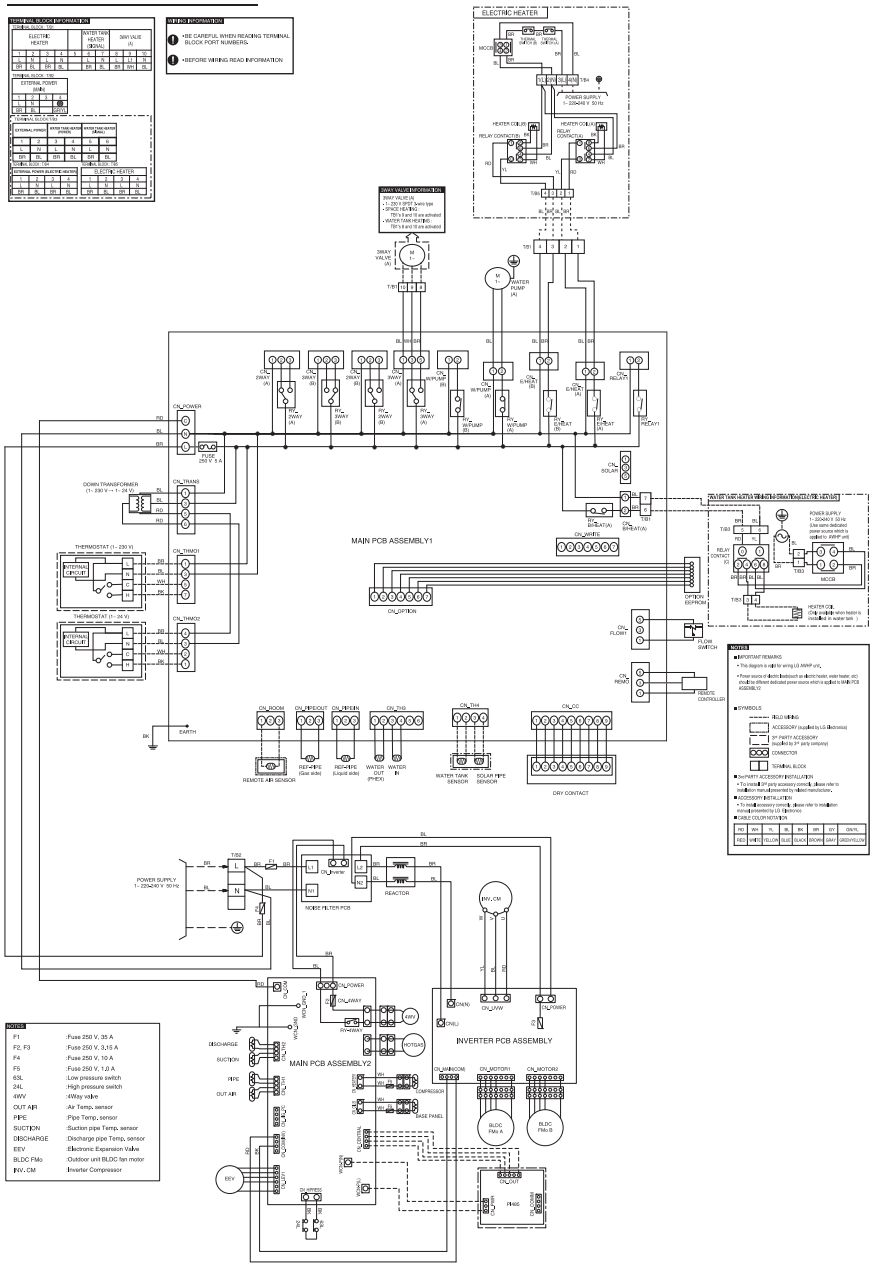

4. Installation of Unit

THERMAV is installed outside to exchange heat with ambient air. Therefore, it is important to secure proper space around the unit and care for specific external conditions.

This chapter presents a guide to install the unit and what to do when installed around seaside.

Conditions where Unit is Installed

General Considerations

- If a sunroof is built over the unit to prevent direct sunlight or rain exposure, make sure that heat radiation from the heat exchanger is not restricted.
- Ensure that the spaces indicated by arrows around front, back and side of the unit.
- Do not place animals and plants in the path of the warm air.
- Take the weight of the unit into account and select a place where noise and vibration are minimum.
- Select a place so that the warm air and noise from the unit do not disturb neighbors.
- The surface of the ground or the structure must be strong enough to bear the weight of the unit.

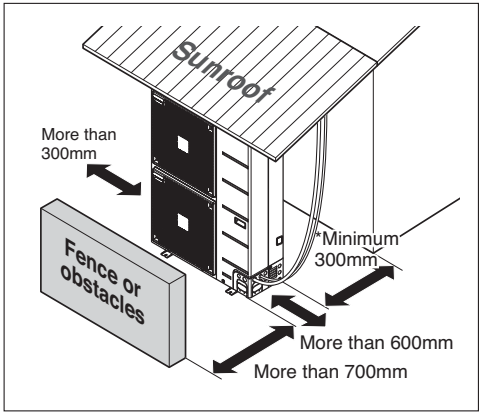

* : Please secure the space to install the shut-off valve and strainer.

Transport

The unit should be transported to the final installation site on a wooden pallet. The unit should be transported by means of a lift truck or dray.

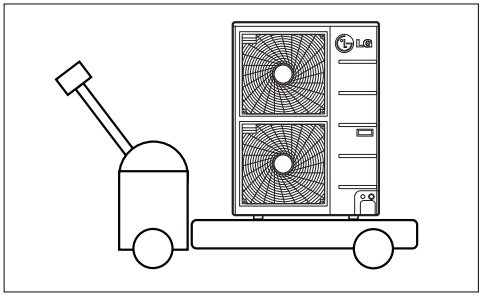

⚠ CAUTION

1. During transport, the unit must not be tilted more than 45°.
2. The unit must not be impacted.
3. The unit more than 30kg should be transported by two carriers or more. (Carriers must wear safety protectors.)
4. When the unit is transported by lift truck or dray, be careful not to fall.
5. Be sure to dispose the scraps of vinyl bag, children can be in danger of suffocation.

Water Volume and Pump Capacity

The water pump is three speed-adjustable (Maximum / Medium / Minimum), so it may be required to change default water pump speed in case of noise by water flow. In most case, however, it is strongly recommended to set speed as Maximum.

NOTICE

Water pump speed

To secure enough water flow rate, do not set water pump speed as "Min."
It can lead unexpected flow rate error CH14.

Model : CHBW096A1, CHBW126A1, CHBW146A1

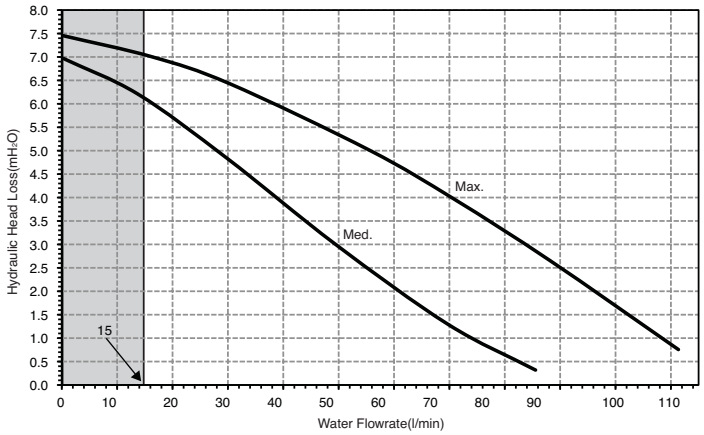

Max. : high speed setting
Med. : low speed setting

Warning : Selecting a water flowrate outside the curves can cause damage to or malfunction of the unit.
: Operation cutoff range

Water Quality

Water quality should be complied with EN 98/83 EC Directives. Requirement for resolved chemical ingredients is following table. Detailed water quality condition can be found in EN 98/83 EC Directives.

Parameter	Value	Parameter	Value
Acrylamide	0.10 *µg/l*	Fluoride	1.5 *mg/l*
Antimony	5.0 *µg/l*	Lead	10 *µg/l*
Arsenic	10 *µg/l*	Mercury	1.0 *µg/l*
Benzene	1.0 *µg/l*	Nickel	20 *µg/l*
Benzo(a)pyrene	0.010 *µg/l*	Nitrate	50 *mg/l*
Boron	1.0 *mg/l*	Nitrite	0.50 *mg/l*
Bromate	10 *µg/l*	Pesticides	0.10 *µg/l*
Cadmium	5.0 *µg/l*	Pesticides — Total	0.50 *µg/l*
Chromium	50 *µg/l*	Polycyclic aromatic hydrocarbons	0.10 *µg/l*
Copper	2.0 *mg/l*	Selenium	10 *µg/l*
Cyanide	50 *µg/l*	Tetrachloroethene and Trichloroethene	10 *µg/l*
1.2-dichloroethane	3.0 *µg/l*	Trihalomethanes — Total	100 *µg/l*
Epichlorohydrin	0.10 *µg/l*	Vinyl chloride	0.50 *µg/l*

⚠ CAUTION

- If the unit is installed at existing hydraulic water loop, it is important to clean hydraulic pipes to remove sludge and scale.
- Installing sludge strainer in the water loop is very important to prevent performance degrade.
- Chemical treatment to prevent rust should be performed by installer.

Frost protection

In areas of the country where entering water temperatures drop below 0°ΔC, the water pipe must be protected by using an approved antifreeze solution. Consult your AWHP unit supplier for locally approved solutions in your area. Calculate the approximate volume of water in the system. (Except the AWHP unit.) And add six litters to this total volume to allow for the water contained in AWHP unit.

Type of Antifreeze	Minimum Temperature for Freeze Protection					
	0°C	-5°C	-10°C	-15°C	-20°C	-25°C
Ethylene glycol	0%	12%	20%	30%	-	-
Propylene glycol	0%	17%	25%	33%	-	-
Methanol	0%	6%	12%	16%	24%	30%

⚠ CAUTION

1. Use only one of the above antifreeze.
2. If a antifreeze is used, pressure drop and capability degradation of the system can be occurred.
3. If one of antifreezes is used, corrosion can be occurred. So please add corrosion inhibitor.
4. Please check the concentration of the antifreeze periodically to keep same concentration.
5. When the antifreeze is used (for installation or operation), take care to ensure that antifreeze must not be touched.
6. Ensure to respect all laws and norms of your country about Anti-freeze usage.

Remote Controller

1. Connect the remote controller cable to the wired remote controller installation board as shown in the right picture.

12V	Red wire
SIG	Yellow wire
GND	Black wire

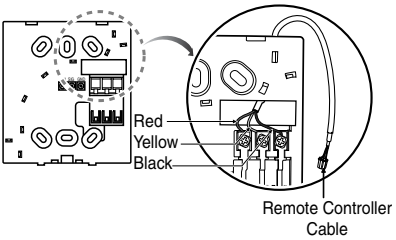

※ The remote controller cable is connected as factory default.

2. After fixing the cable to the guide slot, attach the wired remote controller installation board at the desired location.

• Before fixing the remote controller cable to the guide slot, remove any clogged part of the case in the direction to install before the installation.

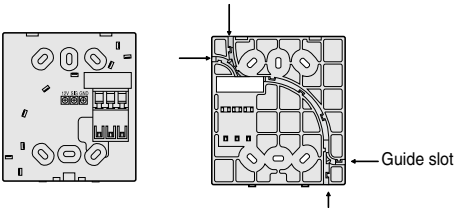

<Front side of installation board> **<Rear side of installation board>**

3. After locating the wired remote controller installation board at the desired location, screw the unit firmly. (When there is a buried box, install the wired remote controller board to fit the buried box.)

• Use the screws provided.

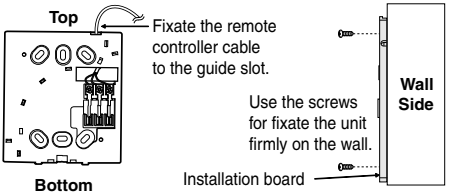

4. After fixing the top part of the remote controller to the installation board as shown in beside picture, press the bottom part to assemble the controller to it's board.

When disassembling the remote controller from the installation board, use the driver as shown in the right picture and insert it into the hole with the arrow. And when you pull the driver in the front direction, the remote controller will be separated.

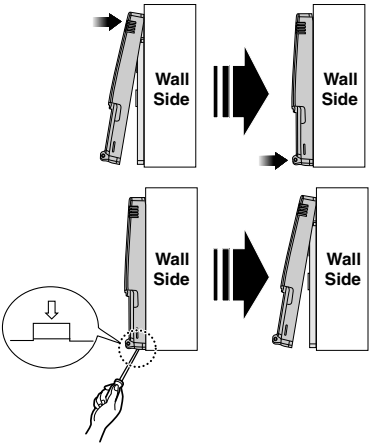

5. Use the connecting cable to connect the unit and the remote controller.

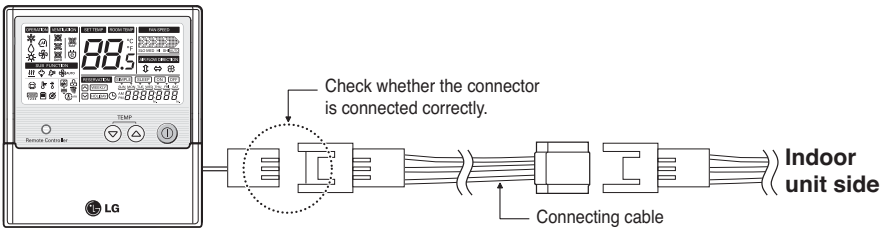

6. When the distance between the wired remote controller and the unit is 10m and above, use the extension cable.

⚠ CAUTION

When installing the wired remote controller, do not bury it in the wall.
(It can cause damage in the temperature sensor.)
Do not install the cable to be 30m or above.
(It can cause communication error.)

- When installing the extension cable, check the connecting direction of the connector of the remote controller side and the product side for correct installation.
- If you install the extension cable in the opposite direction, the connector will not be connected.
- Specification of extension cable: 2547 1007 22# 2 core 3 shield 5 or above.

Wired remote controller installation

- Since the room temperature sensor is in the remote controller, the remote controller box should be installed in a place away from direct sunlight, high humidity and direct supply of cold air to maintain proper space temperature. Install the remote controller about 1.5 m above the floor in an area with good air circulation at an average temperature.

Do not install the remote controller where it can be affected by:

- Drafts, or dead spots behind doors and in corners.
- Hot or cold air from ducts.
- Radiant heat from sun or appliances.
- Concealed pipes and chimneys.
- Uncontrolled areas such as an outside wall behind the remote controller.
- This remote controller is equipped with a seven segment LED. display. For proper display of the remote controller LED's, the remote controller should be installed properly as shown in Fig.1.
  (The standard height is 1.2~1.5 m from floor level.)

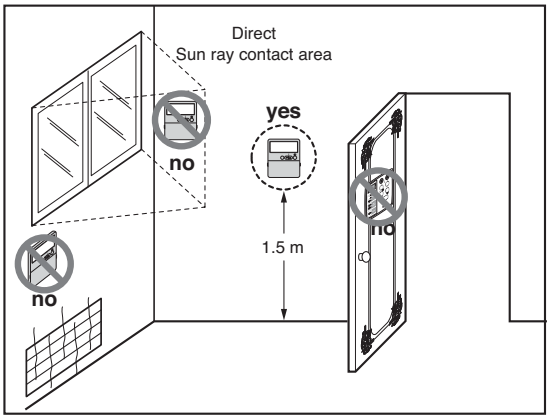

Fig.1 Typical locations for remote controller

Strainer

- Strainer supplied with unit must be connected at the water inlet pipe of unit.
- Check the leak of the connection.
- The mesh of strainer should be clean and replacement periodically. (one or more / year)

Shut-Off Valve

- Shut-Off Valve is used to connect water pipe to unit.
- Tighten the flare nut with two spanner.(check the leak to the connection.)

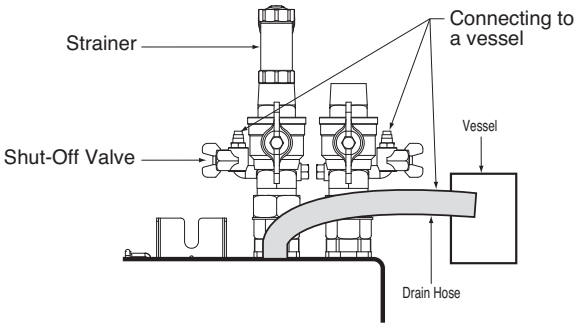

⚠ CAUTION

- In the case of water with added brine, the drain valve of shut-off Valve and drain hose must be connected to a vessel.
- Ensure to respect all laws and norms of your country about Anti-freeze usage.

Installation at Seaside

CAUTION

1. **Unit should not be installed in areas where corrosive gases, such as acid or alkaline gas, are produced.**
2. **Do not install the unit where it could be exposed to sea wind (salty wind) directly. It can result corrosion on the unit. Corrosion, particularly on the condenser and evaporator fins, could cause unit malfunction or inefficient performance.**
3. **If unit is installed close to the seaside, it should avoid direct exposure to the sea wind. Otherwise it needs additional anticorrosion treatment on the heat exchanger.**

Selecting the location

1) If the unit is to be installed close to the seaside, direct exposure to the sea wind should be avoided. Install the unit on the opposite side of the sea wind direction.

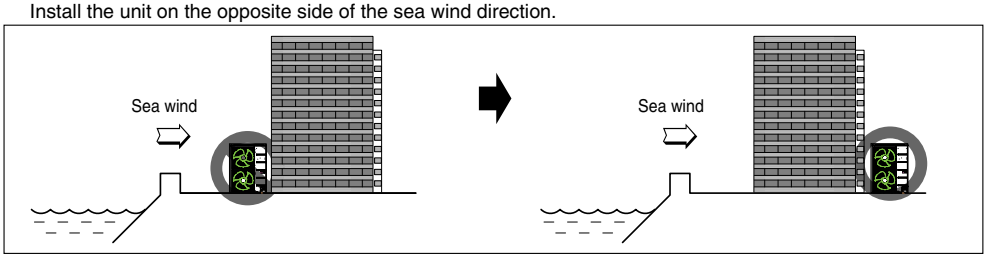

2) In case, to install the unit on the seaside, set up a windbreak not to be exposed to the sea wind.

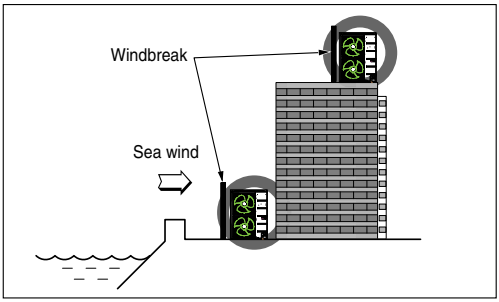

- It should be strong enough like concrete to prevent the sea wind from the sea.
- The height and width should be more than 150% of the unit.
- It should be keep more than 700 mm of space between unit and the windbreak for easy air flow.

3) Select a well-drained place.

1. If you can't meet above guide line in the seaside installation, please contact LG Electronics for the additional anticorrosion treatment.
2. Periodic (more than once/year) cleaning of the dust or salt particles stuck on the heat exchanger by using water

Seasonal wind and cautions in winter

- Sufficient measures are required in a snow area or severe cold area in winter so that unit can be operated well.
- Get ready for seasonal wind or snow in winter even in other areas.
- Install a suction and discharge duct not to let in snow or rain.
- Install the unit not to come in contact with snow directly. If snow piles up and freezes on the air suction hole, the system may malfunction. If it is installed at snowy area, attach the hood to the system.
- Install the unit at the higher installation console by 500mm than the average snowfall (annual average snowfall) if it is installed at the area with much snowfall.
- Where snow accumulated on the upper part of the unit by more than 100mm, always remove snow for operation.

1. The height of H frame must be more than 2 times the snowfall and its width shall not exceed the width of the unit. (If width of the frame is wider than that of the unit, snow may accumulate.)
2. Don't install the suction hole and discharge hole of the unit facing the seasonal wind.

5. Wiring and Water Piping for Unit

Procedures about water piping and electric wiring are described in this chapter. Water piping and water circuit connection, water charging, pipe insulations will be shown for water piping procedures.

Accessories connection, such as electric heater, sanitary water tank, thermostat, 3way or 2way valves, etc will be dealt in separated chapter.

Electrical Wiring

Power cable is a cable which is used to supply external electricity to the unit. This cable is generally connected between external power source (such as main electric power distribution panel of user's house) and the unit.

Procedure for wiring to the unit is four steps. Before starting wiring, check if wire specification is suitable and read following directions and cautions VERY carefully.

Wire Specification

Power Cable Specification : The power cord connected to the unit should be complied with IEC 60245 or HD 22.4 S4 (Rubber insulated cord, type 60245 IEC 66 or H07RN-F)

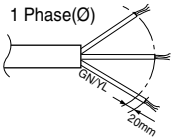

If the supply cord is damaged, it must be replaced by the manufacturer, its service agent or similarly qualified persons in order to avoid a hazard.

Terminal Specification of Power Cable and related Cautions :
Use round pressure terminals for connections to the power terminal block.

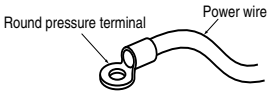

When none are available, follow the instructions below.

- Do not connect wiring of different thicknesses to the power terminal block. (Slack in the power wiring may cause abnormal heat.)
- When connecting wiring which is the same thickness, do as shown in the figure below.

General Consideration

Followings should be considered before beginning unit wiring.

- Field-supplied electrical components such as power switches, circuit breakers, wires, terminal boxes, etc should be properly chosen with compliance with national electrical legislation or regulation.
- Make it sure that supplied electricity is enough to operate the unit, electric heater, water tank heater, etc. The capacity of fuse also selected according to the power consumption.
- The main electricity supply should be dedicated line. Sharing main electricity supply with other devices such as washing machine or vacuum cleaner is not permitted.

⚠ CAUTION

- Before starting wiring job, the main electricity supply should be turned off until wiring is completed.
- When adjusting or changing wiring, the main electricity supply should be turned off and ground wire should be connected securely.
- Installation place should be free from the attack of wild animal. For example, mice's wire attacking or frog's entering into the unit may cause critical electrical accident.
- All power connections should be protected from dew condensation by thermal insulation.
- All electrical wiring should comply with national or local electrical legislation or regulation.
- The ground should be connected exactly. Do not earth the unit to the copper pipe, steel fence at the veranda, city water outlet pipe, or any other conductivity materials.
- Fix all cable using cord clamp tightly. (When cable is not fixed with cord clamp, use additionally supplied cable ties.)

Wiring Procedure for Power Cable

Step 1. : Disassemble the side panel from the unit by loosing screws.
Step 2. : Connect Power cable to Main Power Terminal.
See below figure for detailed information. When connecting earth cable, the diameter of cable should be bigger than 1.6mm2 to secure safety. The earth cable is connected to the terminal block where earth symbol is ⏚ marked.
Step 3. : Use cable clamps (or cord clamps) to prevent unintended move of Power cable.
Step 4. : Reassemble the side panel to the unit by fastening screws.

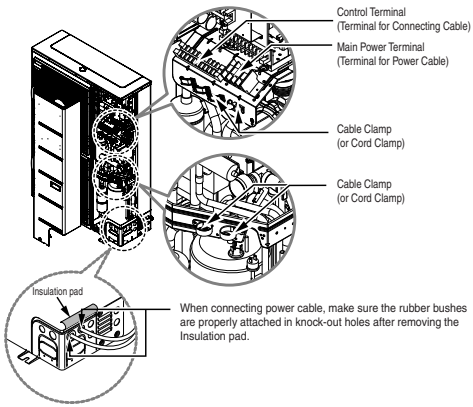

Terminal Block Information

Model : CHBW146A1
CHBW126A1
CHBW096A1

Symbols used below pictures are as follows :

- L, L1, L2 : Live (1~ 230 V)
- N : Neutral (1~ 230 V)
- BR : Brown , WH : White , BL : Blue , BK : Black, GR/YL : Green/Yellow

Terminal Block 1

Water flow switching between under floor heating and sanitary water tank heating

ELECTRIC HEATER					WATER TANK HEATER (Signal)		3WAY VALVE (A)		
1	2	3	4	5	6	7	8	9	10
L	N	L	N		L	N	L	L1	N
BR	BL	BR	BL		BR	BL	BR	WH	BL

Turn on or off electric heater

Turn on or off sanitary water tank heater

Terminal Block 2

EXTERNAL POWER (MAIN)			
1	2	3	4
L	N		⏚
BR	BL		GR/YL

Connecting external electric power supply for electric heater(1Ø)

Circuit Breaker Specification

- Select a power source that is capable of supplying the current required by the unit.
- Use a recognized circuit breaker between the power source and the unit.
  A disconnection device to adequately disconnect all supply lines must be fitted.
- Capacity of circuit breaker recommended.
- Separate main power supply and heater supply.

Model	Power Supply	Core Component Electrical Spec.								MOP & Circuit Breaker					
		Compressor		Electric Heater			Sanitary Tank Heater			For Heat Pump		For Electric Heater (without S/Heater)		For Electric Heater (with S/Heater)	
		RLA (A)	FLA (A)	Capacity (kW)	Power Supply	RLA (A)	Capacity (kW)	Power Supply	RLA (A)	MOP (A)	Circuit Breaker (A)	MOP (A)	Circuit Breaker (A)	MOP (A)	Circuit Breaker (A)
CHBW096A1	1~ 220-240 V 50 Hz	15	18	2+2	1~ 230 V	8.3	3	1~ 230 V	12.5	34.8	30	27	20	44.7	40
				3+3		12.5						40.6	40	53.1	50
CHBW126A1		15	18.5	2+2		8.3				34.8	30	27	20	44.7	40
				3+3		12.5						40.6	40	53.1	50
CHBW146A1		15	19	2+2		8.3				34.8	30	27	20	44.7	40
				3+3		12.5						40.6	40	53.1	50

- S/Heater : Sanitary water tank heater
- FLA : Full load ampere
- MOP : Maximum rating of overcurrent protective device

⚠ CAUTION

After checking and confirming following conditions, start wiring work.

1. Secure dedicated power source for the Air-to-Water heat pump. The wiring diagram (attached inside the panel of the unit) is presenting related information.
2. Provide a circuit breaker switch between power source and the unit.
3. Although it is very rare case, sometimes the screws used to fasten internal wires can be loosen due to the vibration while unit transportation. Check these screws and make it sure if they are all fastened tightly. If not tightened, burn-out of the wire can be occurred.
4. Check the specification of power source such as phase, voltage, frequency, etc.
5. Confirm that electrical capacity is sufficient.
6. Be sure that the starting voltage is maintained at more than 90 percent of the rated voltage marked on the name plate.
7. Confirm that the cable thickness is as specified in the power sources specification. (Particularly note the relation between cable length and thickness.)
8. Provide an ELB(electric leakage breaker) when the installation place is wet or moist.
9. The following troubles would be caused by abnormal voltage supply such as sudden voltage increasing or voltage drop-down.
   - Chattering of a magnetic switch (frequent on and off operation)
   - Physical damage of parts where magnetic switch is contacted
   - Break of fuse
   - Malfunction of overload protection parts or related control algorithms.
   - Failure of compressor start up

Water Piping and Water Circuit Connection

General Considerations

Followings are should be considered before beginning water circuit connection.

- Service space should be secured.
- Water pipes and connections should be cleaned using water.
- Space for installing external water pump should be provided if internal water pump capacity is not enough for installation field.
- Never connect electric power while proceeding water charging.

Water Piping and Water Circuit Connection

Definition of terms are as follow :

- Water piping : Installing pipes where water is flowing inside the pipe.
- Water circuit connecting : Making connection between the unit and water pipes or between pipes and pipes. Connecting valves or elbows are, for example, in this category.

Configuration of water circuit is shown in Chapter 3 “General Information”. All connections should be complied with presented diagram.

While installing water pipes, followings should be considered :

- While inserting or putting water pipes, close the end of the pipe with pipe cap to avoid dust entering.
- When cutting or welding the pipe, always be careful that inner section of the pipe should not be defective. For example, no weldments or no burrs are found inside the pipe.
- Drain piping should be provided in case of water discharge by the operation of the safety valve. This situation can be happened when the internal pressure is over 3.0 bar and water inside the unit will be discharged to drain hose.
- Pipe fittings (e.g. L-shape elbow, T-shape tee, diameter reducer, etc) should be tightened strongly to be free from water leakage.
- Connected sections should be leakage-proof treatment by applying tefron tape, rubber bushing, sealant solution, etc.
- Appropriate tools and tooling methods should be applied to prevent mechanical breakage of the connections.
- Operation time of flow valve(e.g. 3way valve or 2way valve) should be less than 90 seconds.
- While supplying water, pressure of supplying water should be 2.0 bar approximately.
- Pipe is insulated to prevent heat loss to external environment and to prevent dew generation on the surface of the pipe in cooling operation.

When the water pipes are connected.
It must be tightened the nut with two wrench.
Otherwise pipes can be deformed.

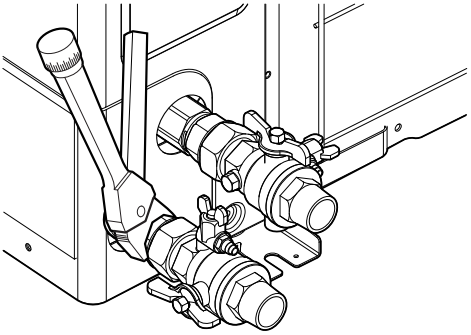

⚠ WARNING

Water condensation on the floor

While cooling operation, it is very important to keep leaving water temperature higher than 16°C. Otherwise, dew condensation can be occurred on the floor.
If floor is in humid environment, do not set leaving water temperature below 18 °C.

Water condensation on the radiator

While cooling operation, cold water may not flow to the radiator. If cold water enters to the radiator, dew generation on the surface of the radiator can be occurred.

Drainage treatment

While cooling operation, condensed dew can drop down to the bottom of the unit. In this case, prepare drainage treatment (for example, vessel to contain condensed dew) to avoid water drop.

6. Accessories Installation

THERMAV can interface to various accessories to extend its functionality and to improve user convenience. In this chapter, accessories and how to connect to THERMAV is introduced.

See the chapter 7 for a dip-switch settings and installer settings.

For accessories supported by LG Electronics, please refer to installation manual of each accessories.

⚠ WARNING

Followings should be kept before installation

- Main power must be turned off during installing 3rd party accessories.
- 3rd party accessories should be comply with supported specification.
- Proper tools should be chosen for installation.
- Never do installation with wet hands.

Electric Heater

Electric heater is to provide additional heat energy when the unit can not generate enough heat in cold winter.

General Information

Electric Heater is supported by LG Electronics.

Model (Electric Heater)	Capacity (kW)	Power (Ø, V, Hz)
AHEH0462A	4	1~, 220-240 V, 50 Hz
AHEH0662A	6	1~, 220-240 V, 50 Hz

Electric Heater is installed on the outside of the unit. It is recommended to install it in the indoor.

Mounting on the Wall

Step 1. Uncover the electric heater accessory.

Step 2. Mark the location of bolts on the wall.

Step 3. Screw bolts at the hole marks.
When screwing bolts, use M8~M11 anchor bolts to secure hanging the unit.

Step 4. Fasten the electric heater accessory on the wall.

⚠ CAUTION

- Electric Heater must be located highest level of water pipe system.
  (Because air-Vent is added in electric heater accessory.)

How to Pipe Electric Heater

Follow below procedures Step 1 ~ Step 4.

Step 1. Uncover the electric heater accessory.

Step 2. Check the diameter of pre-installed pipes of unit.

Step 3. If the diameter of pre-installed pipes is different from diameter of electric heater accessory kit, it is necessary to reduce or extend pipe's diameter.

Step 4. Connect the pipes. The inlet pipe of electric heater accessory must be connected to outlet of the unit.

⚠ WARNING

Followings should be kept before installation

- The unit should be stop before the piping work.
- Never connect electric power while piping electric heater.
- Before the piping working, water in the part(or to heating loop) installed with electric heater should be drained. After working, water should be charged.

⚠ CAUTION

- Electric Heater should be installed with enough space for installation and service.
- Water pipes and connections should be cleaned using water.
- Methods to prevent leackage in plumbing connections must be applied.
- Heater must not be impacted.
- Do not let dirty particle be dropped inside tank to avoid possibility of degrade.
- After installation, make it sure that no leakage is appeared in the connection.

How to Wire Electric Heater

Follow below procedures Step 1 ~ Step 4.

Step 1. Uncover the electric heater accessory.

Step 2. Find the terminal block and connect wires. Refer to the installation manual of the electric heater. (Wires are field-supplied item.)

Step 3. Connect terminal block ports unit and electric heater accessory.

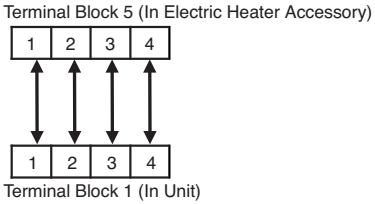

Step 4. Connect power supply cable to terminal block 5.

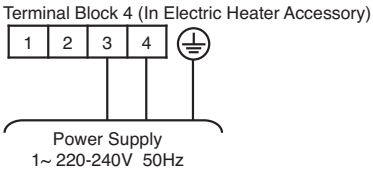

⚠ WARNING

Followings should be kept before wiring

- Supply type of electric heater should be ensured.
- Never connect electric power while wiring electric heater.
- The wire that is connected to electric heater should be used to meet specification of each country.
- Main power of electric heater should be applied with MCCB.

Thermostat

Thermostat is generally used to control the unit by air temperature. When thermostat is connected to the unit, the unit operation is controlled by the thermostat.

Installation Condition

⚠ CAUTION

1. NEVER USE 1~ 220 V Thermostat and 1~ 24 V Thermostat at the same time. If used together, it causes short-circuit and yields power cut-off by circuit breaker.
2. Some electro-mechanical type thermostat has internal delay time to protect compressor. In that case, mode change can takes time more than user's expectation. Please read thermostat manual carefully if the unit does not response quickly.
3. Setting temperature range by thermostat can be different with that of the unit. The heating or cooling set temperature should be chosen within the setting temperature range of the unit.
4. It is highly recommended that the thermostat should be installed where space heating is mainly applied.

Following location should be avoid to secure proper operation :

- Height from floor is approximately 1.5 m.
- Thermostat can not be located where the area may be hidden when door is open.
- Thermostat can not be located where external thermal influence may be applied. (such as above heating radiator or open window)

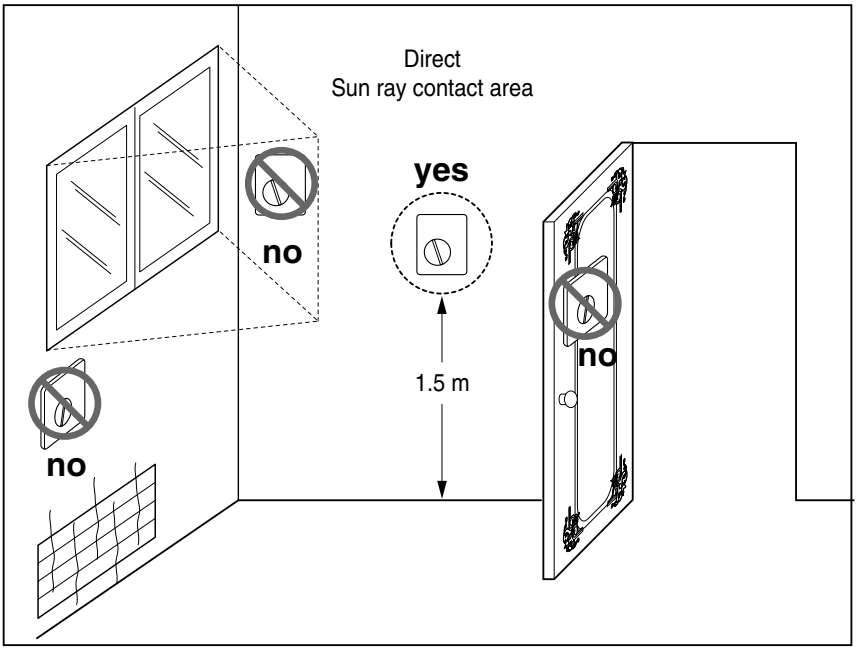

General Information

THERMAV supports following thermostats.

Type	Power	Operating Mode	Supported
Mechanical (1)	1~ 230 V	Heating Only (3)	Yes
		Heating / Cooling (4)	Yes
	1~ 24 V	Heating Only (3)	Yes
		Heating / Cooling (4)	Yes
Electrical (2)	1~ 230 V	Heating Only (3)	Yes
		Heating / Cooling (4)	Yes
	1~ 24 V	Heating Only (3)	Yes
		Heating / Cooling (4)	Yes

(1) There is no electric circuit inside the thermostat and electric power supply to the thermostat is not required.

(2) Electric circuit such as display, LED, buzzer, etc is included in the thermostat and electric power supply is required.

(3) Thermostat generates "Heating ON or Heating OFF" signal according to user"s heating target temperature.

(4) hermostat generates both "Heating ON or Heating OFF" and "Cooling ON or Cooling OFF" signal according to user"s heating and cooling target temperature.

⚠ CAUTION

Choosing Heating / Cooling Thermostat

- Heating / Cooling Thermostat must have "Mode Selection" feature to distinguish operation mode.
- Heating / Cooling Thermostat must be able to assign heating target temperature and cooling target temperature differently.
- If above conditions are not kept, the unit can not operation properly.
- Heating / Cooling Thermostat must send cooling or heating signal immediately when temperature condition is satisfied. No delay time while sending cooling or heating signal is permitted.

How to Wire Thermostat

Follow below procedures Step 1 ~ Step 6.

Step 1. Uncover front cover of the unit and open the control box.
Step 2. Identify the power specification of the thermostat. If it is 1~ 230 V, go to Step 4. Otherwise, if it is 1~ 24 V, go to step 3.
Step 3. Find thermostat connecting cable A and C. Disconnect cable A and C, then connect cable B and C.

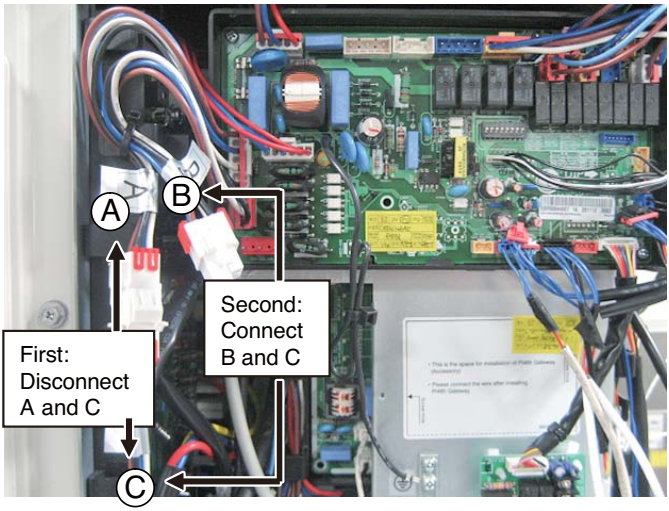

Step 4. If it is Heating Only Thermostat, go to step 5. Otherwise, if it is Heating / Cooling Thermostat, go to step 6.
Step 5. Find terminal block and connect wire as below. After connecting, go to step 6.

THERMOSTAT (Default : 1~ 230 V)			
1	2	3	4
L	N	L1	L2
BR	BL	WH	BK

(L) (N) (H)

Thermostat

⚠ WARNING

Mechanical type Thermostat.
Do not connect wire (N) as mechanical type thermostat does not require electric power supply.

⚠ CAUTION

Do not connect external electric loads.
Wire (L) and (N) should be used only for operation Electric type thermostat.
Never connect external electric loads such as valves, fan coil units, etc. If connected, Main PCB Assembly 1 can be seriously damaged.

(L) : Live signal from PCB to Thermostat
(N) : Neutral signal from PCB to Thermostat
(H) : Heating signal from Thermostat to PCB

Step 6. Find terminal block and connect wire as below.

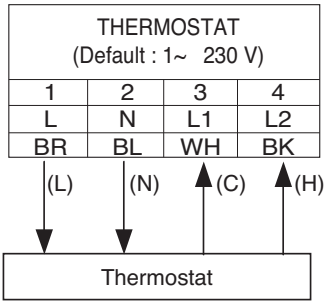

⚠ WARNING

Mechanical type Thermostat.
Do not connect wire (N) as mechanical type thermostat does not require electric power supply.

⚠ CAUTION

Do not connect external electric loads.
Wire (L) and (N) should be used only for operation Electric type thermostat.
Never connect external electric loads such as valves, fan coil units, etc. If connected, Main PCB Assembly 1 can be seriously damaged.

(L) : Live signal from PCB to Thermostat
(N) : Neutral signal from PCB to Thermostat
(C) : Cooling signal from Thermostat to PCB
(H) : Heating signal from Thermostat to PCB

Final Check

- DIP switch setting :
  Set DIP switch No. 8 to ‘ON’ (Check the system set-up of Chapter 7). Otherwise, the unit can not recognize the thermostat.
- Remote Controller :
  - ‘Thermostat’ icon is displayed on the remote controller.
  - Button input is prohibited.

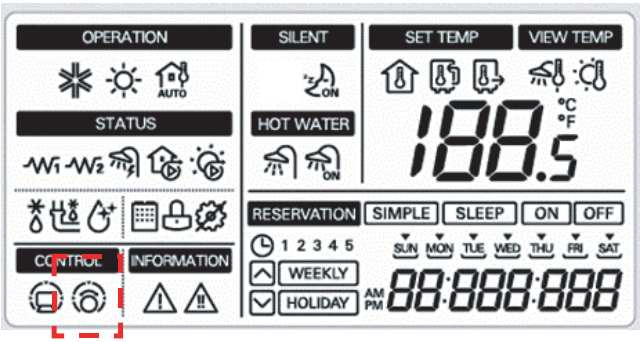

Thermostat Icon

NOTICE

Thermostat Operation with Remote Controller

Following features are permitted when thermostat is installed :

- SET TEMP button
- VIEW TEMP button
- Temperature adjust button (*)
- Sanitary water heating Enable / Disable
- Silent operation On / Off

(*) : Adjusted temperature is only used to control electric heater on / off condition.
The unit does not turn on / off according to the setting temperature at the remote controller.
It turns on / off according to the thermostat signal.

Following features are NOT permitted when thermostat is installed :

- OPER MODE Operating mode (cooling/ heating/ weather-dependent) selection
- Time scheduling
- Operation On / Off

Sanitary Water Tank and Sanitary Water Tank Kit

To establish sanitary water circuit, 3way valve and sanitary water tank kit is required. If solar thermal system is pre-installed at the installation field, solar thermal kit is required to interface solar thermal system - to - sanitary water tank - to - THERMAV.

Installation Condition

Installing sanitary water tank requires following considerations :

- Sanitary water tank should be located at the flat place.
- Water quality should be complied with EN 98/83 EC Directives.
- As this water tank is sanitary water tank (indirect heat exchange), do not use anti water-freezing treatment like ethylene grycol.
- It is highly recommend to wash out inside of the sanitary water tank after installation. It ensures generating clean hot water.
- Near the sanitary water tank there should be water supply and water drain to easy access and maintenance.
- Set the maximum value of the temperature control device of sanitary tank.

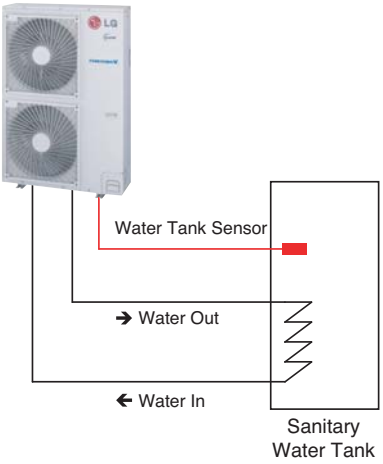

⚠ WARNING

Installing recirculation pump

When is used with sanitary water tank, it is STRONGLY recommended to install recirculation pump to prevent flooding out cold water at the end of hot water supply and to stabilize the water temperature inside the sanitary water tank.

- The recirculation pump should be operated when sanitary water demand is not required. Therefore, external time scheduler to determine when the recirculation pump should turn on and turn off is required.
- The operating duration time of the recirculation pump is calculated as follow :
  Duration time [minute] = k * V * R
  k : 1.2 ~ 1.5 is recommended. (If distance between pump and tank is far, then choose high number.)
  V : Volume of sanitary water tank [liter]
  R : Water flow rate of pump [liter per minute], which is determined by pump performance curve.
- The pump operating start time should be prior to the sanitary water demand.

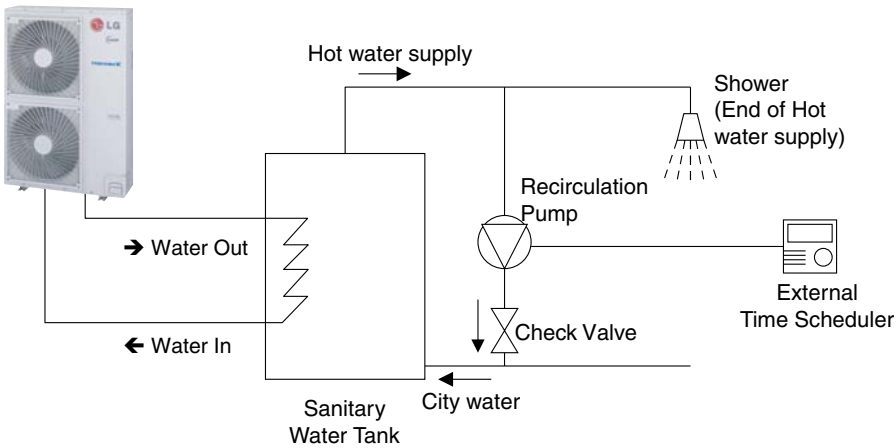

How to Install Sanitary Water Tank

For more detail information about installing sanitary water tank, please refer installation manual provided with sanitary water tank.

PHS02060310(LGRTV200E)PHS020K0310(LG2RTV200)

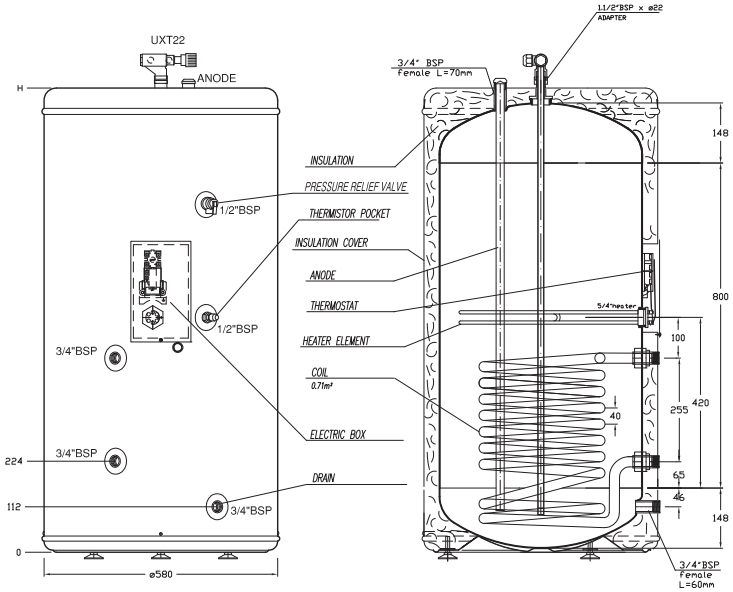

PHS02060320(LGRTV200VE) / PHS03060320(LGRTV300VE)

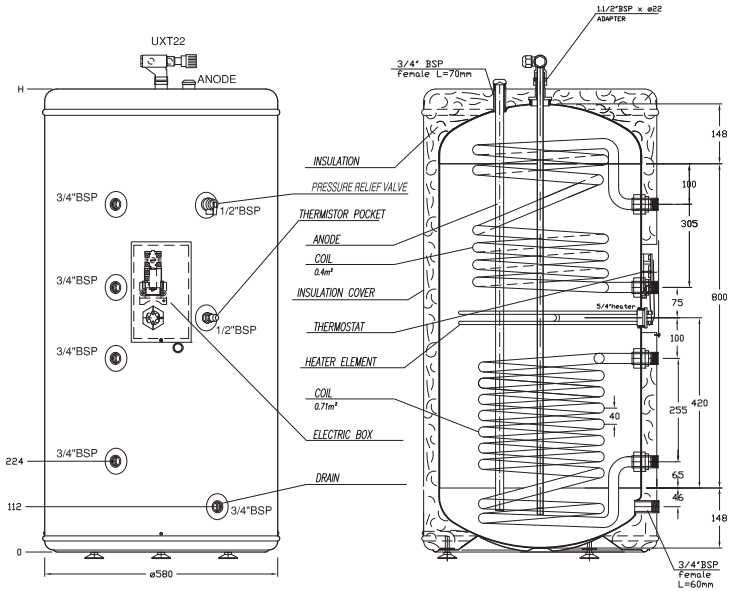

(unit : mm)

How to Install Sanitary Water Tank Kit

Follow below procedures Step 1 ~ Step 5.

Step 1. Uncover the water tank kit and locate it on the wall.

Step 2. Connect the water tank kit to the main power like the below figure 2.

Step 3. Connect the water tank kit to the Main PCB Assembly1 like the below figure 2.

Step 4. Connect power cord of sanitary tank heater. It is located inside of the tank. Refer to the next page For more information.

Step 5. Find sanitary water tank sensor. Plug it to 'CN_TH4' (Red Connector) of the main PCB assembly 1. The sensor should be mounted correctly to the sensor hole of sanitary water tank.

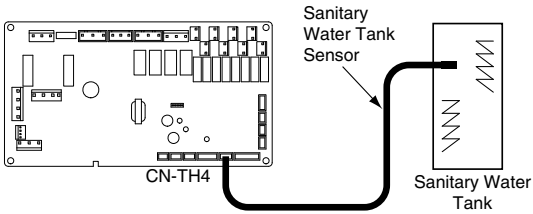

Fig. 1

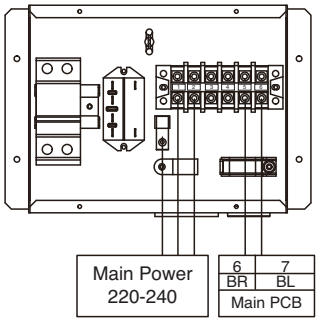

Fig. 2

⚠ CAUTION

Sensor mounting

Insert sensor into sensor socket and bolt it tightly.

How to Wire Sanitary Water Tank Heater

Step 1. Uncover heater cover of the sanitary water tank. Heater is located inside of the tank.

Step 2. Find terminal block in the water tank kit and connect wires as below. Wires are field-supplied item.

(L) : Live signal from Water Tank Kit to Heater

(N) : Neutral signal from Water Tank Kit to Heater

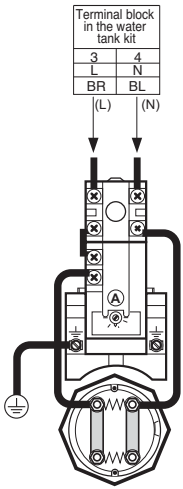

Fig. 3

⚠ WARNING

Wire specification

- Cross-sectional area of the wire should be 5mm^2.

Adjusting thermostat temperature

- To guarantee proper operation, it is recommended to set temperature of thermostat to maximum temperature (symbol at the picture).

3Way Valve

3way valve is required to operate sanitary water tank. Role of 3way valve is flow switching between under floor heating loop and water tank heating loop.

General Information

THERMAV supports following 3way valve.

Type	Power	Operating Mode	Supported
SPDT 3-wire (1)	1~ 230 V	Selecting “Flow A” between “Flow A” and “Flow B” (2)	Yes
		Selecting “Flow B” between “Flow A” and “Flow B” (3)	Yes

(1) : SPDT = Single Pole Double Throw. Three wires consist of Live1 (for selecting Flow A), Live 2 (for selecting Flow B), and Neutral (for common).

(2) : Flow A means ‘water flow from the unit to under floor water circuit.’

(3) : Flow B means ‘water flow from the unit to sanitary water tank.’

How to Wire 3Way Valve

Follow below procedures Step 1 ~ Step 2.

Step 1. Uncover front cover of the unit and open the control box.

Step 2. Find terminal block and connect wire as below.

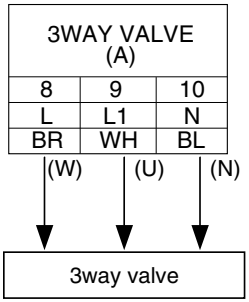

⚠ WARNING

- 3way valve should select water tank loop when electric power is supplied to wire (W) and wire (N).
- 3way valve should select under floor loop when electric power is supplied to wire (U) and wire (N).

(W) : Live signal (Water tank heating) from PCB to 3way valve

(U) : Live signal (Under floor heating) from PCB to 3way valve

(N) : Neutral signal from PCB to 3way valve

⚠ WARNING

Mice can not be appeared to prevent entering the unit or attacking wires.

Final Check

• Flow direction :

- Water should flow from water outlet of the unit to sanitary tank water inlet when sanitary tank heating is selected.
- To verify the flow direction, check temperature at the water outlet of the unit and water inlet of sanitary water tank.
- If correctly wired, these temperatures should be almost equivalent if thermal insulation of water pipe is well performed.

• Noise or water pipe vibration while 3way valve operation

- Due to surging effect or cavitation effect, noise or water pipe vibration can be occurred while 3way valve is operating.
- In that case, check followings :
  - Is water circuit (both under floor water loop and sanitary water tank loop) fully charged? If not, additional water charging is required.
  - Fast valve operation yields noise and vibration. Appropriated valve operating time is 60~90 seconds.

Air-Vent

• For correct operation of the unit, all air in the system must be exhausted by manual air-vent. (located in front of pump)
  - It is easy to exhaust air during charging water into the system.

• Also, air can be exhausted by additional automatic air-vent.
(Additional air-vent must be located highest level of water pipe system.)

Water Volume and Expansion Vessel Pressure

Expansion vessel should be installed in the water circuit to protect components from water pressure.

- Minimum total water volume is 20 liter. (In special case, extra water volume might be required.)
- Pre-pressure is adjusted by the total water volume. If the unit is located at the highest position of the water circuit, adjustment is not required.
- To adjust pre-pressure, use nitrogen gas by certificated installer.

Example) Expansion Vessel of 8 liter capacity

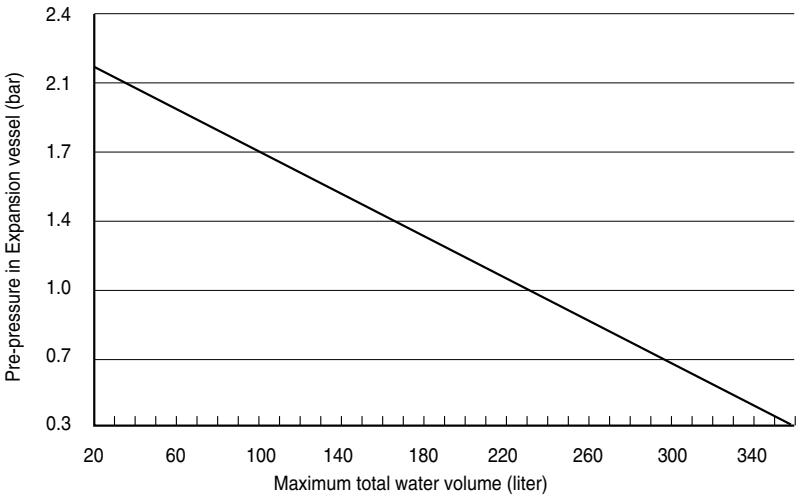

Adjusting pre-pressure of expansion vessel is as following :

Step 1. Refer "Volume-Height" table.
If installation scene is belong to Case A, go to Step 2.
Otherwise, if it is Case B, do nothing. (pre-pressure adjustment is not required.)
Otherwise, if it is Case C, go to Step 3.

Step 2. Adjust pre-pressure by following equation.
Pre-pressure [bar] = (0.1*H + 0.3) [bar] where H : difference between unit and the highest water pipe 0.3 : minimum water pressure to secure unit operation

Step 3. Volume of expansion vessel is less than installation scene.
Please install additional expansion vessel at the external water circuit.

Volume-Height Table

	V < 230 liter	V ≥ 230 liter
H<7 m	Case B	Case A
H≥7 m	Case A	Case C

H : difference between unit and the highest water pipe
V : total water volume of installation scene

7. System Set-Up

As THERMAV. is designed to satisfy various installation environment, it is important to set up system correctly. If not configured correctly, improper operation or degrade of performance can be expected.

DIP Switch Setting

⚠ CAUTION

Turn off electric power supply before setting DIP switch.

- Whenever adjusting DIP switch, turn off electric power supply to avoid electric shock.

General Information

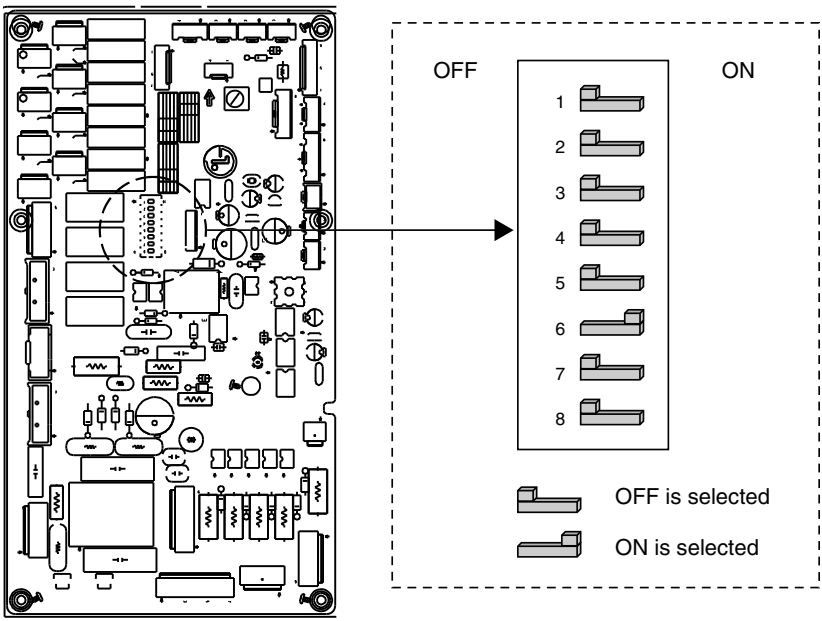

DIP Switch Information

Description	Setting	Default
Role when central controller is equipped.	1 As Master 1 As Slave	1
Accessory installation information.	2 3 Unit only 2 3 Unit + Sanitary water tank is installed. 2 3 Unit + Sanitary water tank + Solar thermal system is installed.	2 3
Emergency operation Level.	4 High temperature cycl.e 4 Low temperature cycle.	4
External water pump installation information.	5 External water pump is NOT installed. 5 External water pump is installed.	5
Selecting electric heater capacity.	6 7 Step 2 capacity is used. 6 7 Step 1 capacity is used. 6 7 Electric heater is not used.	6 7
Thermostat installation information.	8 Thermostat is NOT installed. 8 Thermostat is installed.	8

NOTICE

Emergency Operation

- **Definition of terms**
  - **Trouble :** a problem which can stop system operation, and can be resumed temporally under limited operation without certificated professional's assist.
  - **Error :** problem which can stop system operation, and can be resumed ONLY after certificated professional's check.
  - **Emergency mode :** temporary heating operation while system met Trouble.

- **Objective of introducing 'Trouble'**
  - Not like airconditioning unit, Air-to-Water heat pump is generally operating in whole winter season without any system stopping.
  - If system found some problem, which is not critical to system operating for yielding heating energy, the system can temporarily continue in emergency mode operation with end user's decision.

- **Classified Trouble**
  - Trouble is classified two levels according to the seriousness of the problem : Slight Trouble and Heavy trouble
  - **Slight Trouble :** Sensor trouble.
  - **Heavy trouble :** Compressor cycle trouble.
  - **Option Trouble :** a problem is found for option operation such as water tank heating. In this trouble, the troubled option is assumed as if it is not installed at the system.

- **Emergency operation level**
  - When system met trouble, it stops operation and wait for user's decision : Calling service center or starting emergency operation.
  - To start emergency operation, user simply push ON / OFF button once more.
  - Two different levels are prepared for emergency operation : High temperature cycle and low temperature cycle.
  - In emergency operation mode, user can not adjust target temperature.

※ It can not be operated, if the electric heater accessory is not installed.

	DIP Switch	Target Leaving Water Temperature	Target Room Air Temperature	Target Sanitary Water Temperature
High temperature cycle	OFF	50°C	24°C	70°C
Low temperature cycle	ON	30°C	19°C	50°C

- **Following features are permitted in emergency operation :**
  - Operation On/Off
  - VIEW TEMP button(*)
  - Temperature adjust button (*)
  - Sanitary water heating Enable / Disable

(*) : Temperature measured by failed sensor is displayed as '- -'.

(*) : Adjusted temperature is only used to control electric heater on / off condition.
The unit does not turn on / off according to the setting temperature at the remote controller.
It turns on / off according to the thermostat signal.

- **Following features are NOT permitted in emergency operation :**
  - Operating mode (cooling/ heating/ weather-dependent) selection
  - Time scheduling
  - SET TEMP button
  - Silent operation On / Off

- **Duplicated trouble : Option trouble with Slight or Heavy trouble**
  If option trouble is occurred with slight (or heavy) trouble at the same time, the system puts higher priority to slight (or heavy) trouble and operates as if slight (or heavy) trouble is occurred.
  Therefore, sometimes sanitary water heating can be impossible in emergency operation mode.
  When sanitary water is not warming up while emergency operation, please check whether the sanitary water sensor and related wiring are connected well or not.

- **Emergency operation is not automatically restarted after main electricity power is reset.**
  In normal condition, the unit operating information is restored and automatically restarted after main electricity power is reset.
  But in emergency operation, automatic re-start is prohibited to protect the unit.
  Therefore, user must restart the unit after power reset when emergency operation has been running.

Installer Setting

How to enter installer setting mode

⚠ CAUTION

Installer setting mode is to set the detail function of the remote controller.
If the installer setting mode is not set correctly, it could cause problems to the unit, user injury or property damage. This must be set by an certificated installer, and any installation or change that is carried out by a non-certificated person should be responsible for the results. In this case, free service cannot be provided.

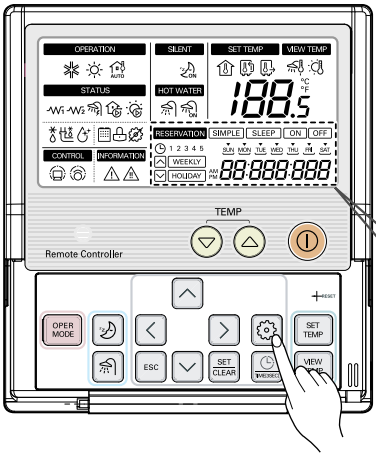

1 Press Function Setting button for 3 seconds to enter the installer setting mode.

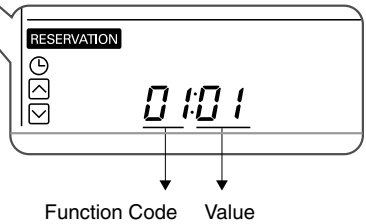

(When you enter the installer setting mode initially, function code is displayed on the bottom of the LCD screen.)

Repeat pressing button, and the function code will be changed from 01 to 2B. Please refer the code table on the next page.

Summary

Example of Fuction Code Display

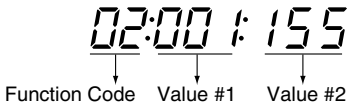

Code	Item		Detail	Remark
1	Function		Test Run	
	Description		Instant cooling operation for charging additional refrigerant	
	Value #1	Note	-	
		Default	01	
		Range	-	
	Value #2	Note	-	
		Default	-	
		Range	-	
2	Function		Disable 3 Min. Delay	
	Description		Factory use only	
	Value #1	Note	-	
		Default	01	
		Range	-	
	Value #2	Note	-	
		Default	-	
		Range	-	
3	Function		Remote Air Sensor Connection	
	Description		Connection information about remote air sensor	
	Value #1	Note	01:Remote air sensor is NOT connected and NOT used. 02:Remote air sensor is connected and used.	
		Default	1	
		Range	01~02	
	Value #2	Note	-	
		Default	-	
		Range	-	
4	Function		Celsius/Fahrenheit Switching	
	Description		Display temperature in Celsius or Fahrenheit	
	Value #1	Note	01:Celsius 02:Fahrenheit	
		Default	1	
		Range	01~02	
	Value #2	Note	-	
		Default	-	
		Range	-	

Code	Item		Detail	Remark
5	Function		Setting Temperature Selection	
	Description		Selection for setting temperature as air temperature or leaving water temperature.	
	Value #1	Note	01:Air temperature 02:Leaving water temperature Air temperature as setting temperature is ONLY available when remote air sensor. Connection is enabled and Function Code 03 is set as 02.	
		Default	2	
		Range	01~02	
	Value #2	Note	-	
		Default	-	
		Range	-	
6	Function		Auto Dry Contact	
	Description		Setting dry contact auto start option. If thermostat is used, value should be changed from "2" to "1".	
	Value #1	Note	01:Auto Start OFF 02:Auto Start ON	
		Default	2	
		Range	01~02	
	Value #2	Note	-	
		Default	-	
		Range	-	
7	Function		Address Setting	
	Description		Assigning address when central controller is installed If thermostat is used, value should be changed from "2" to "1".	
	Value #1	Note	-	
		Default	00	
		Range	00~FF	
	Value #2	Note	-	
		Default	-	
		Range	-	
11	Function		Setting Air Temperature in Cooling Mode	'Setting Air Temperature' is used when user wants to set target temperature by room air temperature. 'Setting Leaving Water Temperature' is used when user wants to set target temperature by leaving(from the unit) water temperature.
	Description		Adjusting range of 'Setting Air Temperature' in cooling mode	
	Value #1	Note	Upper Limit of setting range	
		Default	30°C	
		Range	24~30°C	
	Value #2	Note	Lower Limit of setting range	
		Default	18°C	
		Range	18~22°C	
12	Function		Setting Leaving Water Temperature in Cooling Mode	
	Description		Adjusting range of 'Setting Leaving Water Temperature' in cooling mode	
	Value #1	Note	Upper Limit of setting range	
		Default	24°C	
		Range	20~25°C	
	Value #2	Note	Lower Limit of setting range(FCU is equipped)	
		Default	06°C	
		Range	06~18°C	

Code	Item		Detail		Remark
12	Value #2	Note	Lower Limit of setting range(FCU is NOT equipped)		'Setting Air Temperature' is used when user wants to set target temperature by room air temperature. 'Setting Leaving Water Temperature' is used when user wants to set target temperature by leaving(from the unit) water temperature. * : Electric heater is not used
		Default	16°C		
		Range	16~18°C		
13	Function		Setting Air Temperature in Heating Mode		
	Description		Adjusting range of 'Setting Air Temperature' in heating mode		
	Value #1	Note	Upper Limit of setting range		
		Default	30°C		
		Range	24~30°C		
	Value #2	Note	Lower Limit of setting range		
		Default	16°C		
		Range	16~22°C		
14	Function		Setting Leaving Water Temperature in Heating Mode		
	Description		Adjustin range of 'Setting Leaving Water Temperature' in heating mode		
	Value #1	Note	Upper Limit of setting range		
		Default	65°C		
		Range	35~65°C		
	Value #2	Note	Lower Limit of setting range		
		Default	15°C(*20°C)		
		Range	15~34°C(*20~34°C)		
15	Function		Setting Sanitary Tank Leaving Water Temperature for Sanitary Water Heating		'Setting Sanitary Tank Leaving Water Temperature' is used when user wants to set water temperature of Sanitary Tank.
	Description		Adjusting range of 'Setting Sanitary Tank Leaving Water Temperature' in sanitary water heating mode		
	Value #1	Note	Upper Limit of setting range		
		Default	50°C		
		Range	50~80°C		
	Value #2	Note	Lower Limit of setting range		
		Default	40°C		
		Range	30~40°C		
21	Function		Setting Electric Heater On/Off temperature		DIP Switch setting is described in Chapter 8 of Installation Manual.
	DIP switch setting		No.6 = Off No.7 = On	No.6 = Off No.7 = Off	
	Description		Setting for Using Step 1 capacity of electric heater	Setting for Using Step 2 capacity of electric heater	
	Value #1	Note	Outdoor air temperature where Step 1 capacity of electric heater starts operation.	Base outdoor air temperature	
		Default	0°C		
		Range	-15~18°C		
	Value #2	Note	Not used	Temperature gap (it means 'how much colder than base outdoor air temperature?')	
		Default	-	0°C	
		Range	-	0~33°C	

Code	Item		Detail	Remark
22	Function		Setting Cut-off Temperature in Cooling Mode (FCU setting included)	
	Description		Determine leaving water temperature when the unit is turned off. This function is used for preventing condensation on the floor in cooling mode.	
	Value #1	Note	Cut-off temperature. Value #1 is valid when Value #2 is '01 (that means, FCU is installed)'."	
		Default	16°C	
		Range	16~25°C	
	Value #2	Note	Determines if FCU is installed or not. '01' means 'FCU is NOT installed', and '00' means 'FCU is installed.'	
		Default	00	
		Range	00(Equipped)~01(NOT Equipped)	
23	Function		Setting outdoor temperature range for Weather-dependent operation	
	Description		Setting outdoor Max/Min temperature for weather-dependent operation	
	Value #1	Note	Upper Limit of setting range	
		Default	-10°C	
		Range	-20~05°C	
	Value #2	Note	Lower Limit of setting range	
		Default	15°C	
		Range	10~20°C	
24	Function		Setting indoor air temperature range for Weather-dependent operation	
	Description		Setting indoor Max/Min temperature for weather-dependent operation	
	Value #1	Note	Upper Limit of setting range	
		Default	21°C	
		Range	20~30°C	
	Value #2	Note	Lower Limit of setting range	
		Default	16°C	
		Range	16~19°C	
25	Function		Setting leaving water temperature range for Weather-dependent operation	
	Description		Setting leaving water Max/Min temperature for weather-dependent operation	
	Value #1	Note	Upper Limit of setting range	
		Default	65°C	
		Range	35~65°C	
	Value #2	Note	Lower Limit of setting range	
		Default	15°C(*20°C)	* : Electric heater is not used
		Range	15~34°C(*20~34°C)	
26	Function		Setting Disinfection Operation	Sanitary water heating should be enable. • If sanitary water heating is disable,
	Description		Setting start/maintain time for disinfection	
	Value #1	Note	Enable/Disable of Disinfection Operation(00:Disable , 01:Enable)	
		Default	00	
		Range	00~01	

Code	Item		Detail	Remark
	Value #1	Note	Starting Date(Sunday:1,Monday:2, ···· ,Saturday:7)	the disinfection mode will not be operated although Value #1 of Code 26 is set as '01'. • To use disinfection mode, sanitary water heating should be enable.
		Default	06	
		Range	01~07	
	Value #2	Note	Starting Time in 24 hours(00~23)	
		Default	23	
		Range	00~23	
27	Function		Setting Disinfection Operation	
	Description		Setting disinfection temperature	
	Value #1	Note	Maximum heating temperature	
		Default	70°C	
		Range	40~80°C	
	Value #2	Note	Maximum heating duration in minute	
		Default	10min	
		Range	05~60min	
28	Function		Setting control parameter for Sanitary water heating operation	Only available when Sanitary Water Tank is installed.
	Description		See below notes for each values	
	Value #1	Note	Temperature gap from Value #2 of Function Code 28	
		Default	05°C	
		Range	01~20°C	
	Value #2	Note	Maximum temperature generated by AWHP compressor cycle	
		Default	60°C	
		Range	40~60°C	
29	Function		Setting control parameter for Sanitary water heating operation	
	Description		See below notes for each values	
	Value #1	Note	Temperature gap from target sanitary water temperature. (This value is required to frequent On and Off of water tank heater.)	
		Default	03°C	
		Range	02~04°C	
	Value #2	Note	Determining heating demand priority between sanitary water tank heating and under floor heating	
		Default	00	
		Range	00~01	
2A	Function		Miscellaneous setting	
	Description		Determine electric heater and water heater on and off	
	Value #1	Note	00 : Operate both Electric Heater and Sanitary Tank Heater 01 : Operate ONLY Sanitary Tank Heater	
		Default	00	
		Range	00~01	
	Value #2	Note	Not used	
		Default	-	
		Range	-	

Code	Item		Detail	Remark
2B	Function		Sanitary water heating timers	
	Description		Determine following time duration : operation time of sanitary tank heating, stop time of sanitary tank heating, and delay time of sanitary tank heater operating.	
	Value #1	Note	This time duration defines how long time sanitary tank heating can be continued.	
		Default	30min	
		Range	5 ~ 95 min (step: 5 min)	
	Value #2	Note	This time duration defines how long time sanitary tank heating can be stopped. It is also regarded as time gap between sanitary tank heating cycle.	
		Default	180 min	
		Range	0 ~ 600 min (step: 30 min)	
	Value #3	Note	This time duration defines how long time sanitary tank heater will not be turned on in sanitary water heating operation.	
		Default	20 min	
		Range	20 ~ 95 min (step: 5 min)	

❊ Some contents may not be displayed depending on DIP switch setting in the Main PCB Assembly 1.

Common Setting

- **Function Code 01** : Test Run
  Test run should be performed when additional refrigerant charging is required. To charge the refrigerant, the unit must run in Cooling mode. Test run instantly makes the unit working in Cooling mode for 18 minutes.

  Note: • If you press any kind of button during this mode, Test Run mode will be finished.
  • After running 18 minutes under test run mode, system will automatically turn OFF.

- **Function Code 02** : Disable 3 minute Delay
  Factory use only.

- **Function Code 03** : Remote Air Sensor Connection
  If user connects remote air sensor to control the unit by room air temperature, the connection information should be notified to the unit.

  Note : If remote air sensor is connected but this function code is not set correctly, the unit can not be controlled by room air temperature.

- **Function Code 04** : Celsius/Fahrenheit Switching
  Temperature is displayed in Celsius or Fahrenheit.

- **Function Code 05** : Setting Temperature Selection
  The unit can be operated according to air temperature or leaving water temperature. The selection for setting temperature as air temperature or leaving water temperature is determined.

  Note : Air temperature as setting temperature is ONLY available when Remote Air Sensor Connection is enabled and Function Code 03 is set as 02.

- **Function Code 06** : Auto Dry Contact
  This function allows the Dry contact operate under Auto Run mode or Manual mode with remote controller.

  If thermostat is used, value should be changed from "2" to "1".

- **Function Code 07** : Address Setting
  When Central Controller is installed, address assigning is set by this function.

Temperature Range Setting

• **Function Code 11** : Setting Air Temperature in Cooling Mode
Determine cooling setting temperature range when air temperature is selected as setting temperature.

NOTICE

Only available when remote air temperature sensor is connected.
• Accessory PQRSTA0 should be installed.
• Also, Function Code 03 should be set properly.

• **Function Code 12** : Setting Leaving Water Temperature in Cooling Mode
Determine cooling setting temperature range when leaving water temperature is selected as setting temperature.

NOTICE

Water condensation on the floor
• While cooling operation, it is very important to keep leaving water temperature higher than 16°C. Otherwise, dew condensation can be occurred on the floor.
• If floor is in humid environment, do not set leaving water temperature below 18 °C.

NOTICE

Water condensation on the radiator
• While cooling operation, cold water may not flow to the radiator. If cold water enters to the radiator, dew generation on the surface of the radiator can be occurred.

• **Function Code 13** : Setting Air Temperature in Heating Mode
Determine heating setting temperature range when air temperature is selected as setting temperature.

CAUTION

Only available when remote air temperature sensor is connected.
• Accessory PQRSTA0 should be installed.
• Also, Function Code 03 should be set properly.

• **Function Code 14** : Setting Leaving Water Temperature in Heating Mode
Determine heating setting temperature range when leaving water temperature is selected as setting temperature.

• **Function Code 15** : Setting Sanitary Tank Leaving Water Temperature
Determine heating setting temperature range of water tank leaving water.

NOTICE

Only available when sanitary water tank feature is installed.
• Sanitary water tank and sanitary water tank kit should be installed.
• DIP switch No. 2 and 3 should be set properly.

Temperature Control Parameter Setting and Etc

• **Function Code 21** : Setting Electric Heater On/Off temperature
Using Step 1 capacity of electric heater : when DIP Switch No. 6 and 7 is set as ‘OFF-ON’ :
- Value #1 : outdoor air temperature where Step 1 capacity of electric heater starts operation.
- Value #2 : not used.
- Example : If Value #1 is set as ‘-1’ and DIP Switch No 6. and 7 is set as ‘OFF-ON’, then Step 1 capacity of electric heater will start operation when outdoor air temperature is below -1°C and current leaving water temperature or room air temperature is much belower than target leaving water temperature or target room air temperature.

Using Step 2 capacity of electric heater : when DIP Switch No. 6 and 7 is set as ‘OFF-OFF’ :
- Value #1 : base outdoor air temperature.
- Value #2 : not used
- Example : If Value #1 is set as '-1' and DIP Switch No 6. and 7 is set as 'OFF-OFF', then step2 capacity of electric heater will start operation when outdoor air temperature is below -1°C and current leaving water temperature or room air temperature is much belower than target leaving water temperature or target room air temperature.

• **Function Code 22** : Setting Cut-off Temperature in Cooling Mode (FCU setting included)
Determine leaving water temperature when the unit is turned off. This function is used fr preventing condensation on the floor in cooling mode.
- Value #1 : cut-off temperature. Value #1 is valid when Value #2 is ’01 (that means, FCU is installed)’.
- Value #2 : determines if FCU is installed or not. ’01’ means ‘FCU is NOT installed’, and ’00’ means ‘FCU is installed.’
- Example : If Value #1 is set as ‘10’ and Value #2 is ’01’ and actually FCU is NOT installed in the water loop, the unit stop operation in cooling mode when the leaving water temperature is below 10 °C.
- Example : If Value #1 is set as ‘10’ and Value #2 is ’00’ and actually FCU is installed in the water loop, the Value #1 is not used and the unit do NOT stop operation in cooling mode when the leaving water temperature is below 10 °C.

NOTICE

FCU Installation
• If FCU is used, related 2way valve should be installed and connected to the Main PCB assembly 1.
• If Value #2 is set as ’00’ but FCU or 2way valve is NOT installed, the unit can do abnormal operation.

Function Code 23 and 24 : Setting Weather-dependent operation Mode

- **Function Code 23, 24, and 25** : Setting Weather-dependent operation

  Weather-dependent operation is that the unit automatically adjusts target temperature (leaving water or room air) according to the outdoor air temperature.

  - Value #1 and Value #2 of Function Code 23 : range of outdoor air temperature
  - Value #1 and Value #2 of Function Code 24 : range of auto-adjustable target room air temperature
  - Value #1 and Value #2 of Function Code 25 : range of auto-adjustable target leaving water temperature

  Note : Weather-dependent operation is applied for heating mode only.

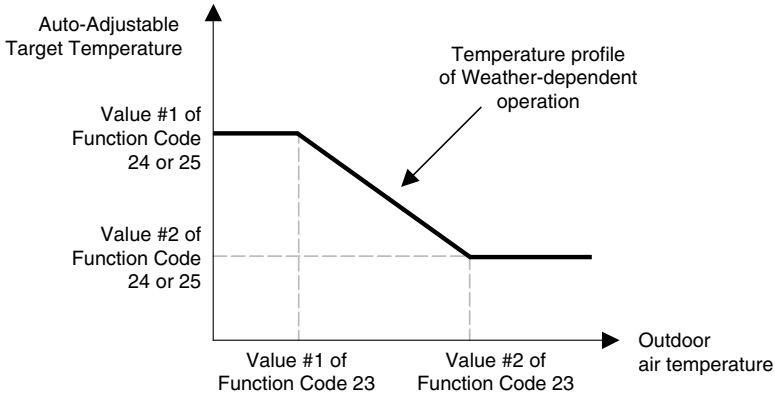

- **Function Code 26 and 27** : Setting Disinfection operation

Disinfection operation is special sanitary tank operation mode to kill and to prevent growth of viruses inside the tank.

- Value #1 of Function Code 26 : Selecting enable or disable of disinfection operation. ’00’ for disable, and ’01’ for enable.
- Value #2 of Function Code 26 : Determining the date when the disinfection mode is running. ’01’ for Sunday, ’02’ for Monday, … , and ’07’ for Saturday.
- Value #3 of Function Code 26 : Determining the time when the disinfection mode is running. ’00’ for 0:00am, ’01’ for 01:00am, … , ’22’ for 10:00pm, and ’23’ for 11:00pm.
- Value #1 of Function Code 27 : Target temperature of disinfection mode.
- Value #2 of Function Code 27 : Duration of disinfection mode.

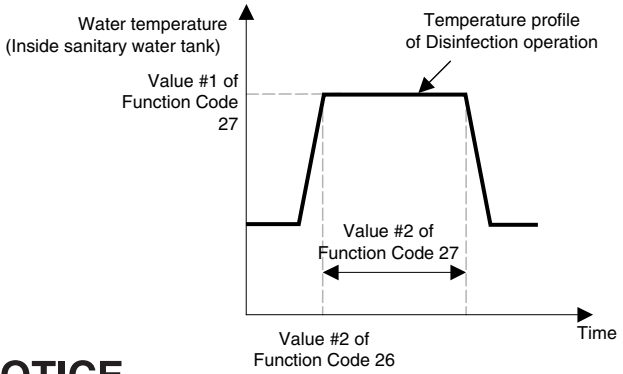

NOTICE

Vales of Function Code 26

- If Value #1 of Function Code 26 is set as ’00’, that is ‘disable disinfection mode’, Value #2 and Value #3 is not used.
- When Value #1 is set as ’01’, that is ‘enable disinfection mode’,’ Value #2 is displayed at the position of Value #1 and Value #3 is displayed at the position of Value #2. It is due to limited width of the remote controller display.

NOTICE

Sanitary water heating should be enable.

- If sanitary water heating is disable, the disinfection mode will not be operated although Value #1 of Code 26 is set as ’01’.
- To use disinfection mode, sanitary water heating should be enable.(by button input or scheduler programming)

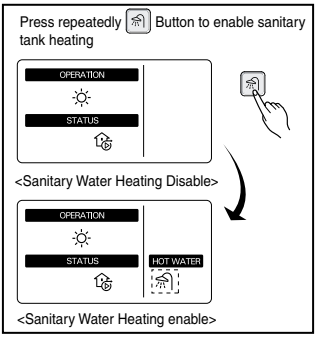

• **Function Code 28 and 29** : Setting control parameter for Sanity water heating operation

Descriptions for each parameters are as following.

- Value #1 of Function Code 28 : temperature gap from Value #2 of Function Code 28.
- Value #2 of Function Code 28 : maximum temperature generated by AWHP compressor cycle.
- Example : If Value #1 is set as ‘5’ and Value #2 is set as ’48’, then Session A (see the graph) will be started when the water tank temperature is below 45°…. If temperature is above 48 °…, then Session B will be started.

- Value #1 of Function Code 29 : temperature gap from target sanitary water temperature. This value is required to frequent On and Off of water tank heater.
- Value #2 of Function Code 29 : Determining heating demand priority between sanitary water tank heating and under floor heating.
- Example : If user’s target temperature is set as ’70’ and Value #1 is set as ‘3’, then the water tank heater will be turned off when the water temperature is above 73 °C. The water tank heater will be turned on when the water temperature is below 70 °C.
- Example : If Value #2 is set as ‘0’, that means heating priority is on sanitary water heating, sanitary water is heated by AWHP compressor cycle and water heater. In this case the under floor can not be heated while sanitary water heating. On the other hand, if the Value #2 is set as ‘1’, that means heating priority is on under floor heating, sanitary tank is ONLY heated by water heater. In this case the under floor heating is not stopped while sanitary water is heated.

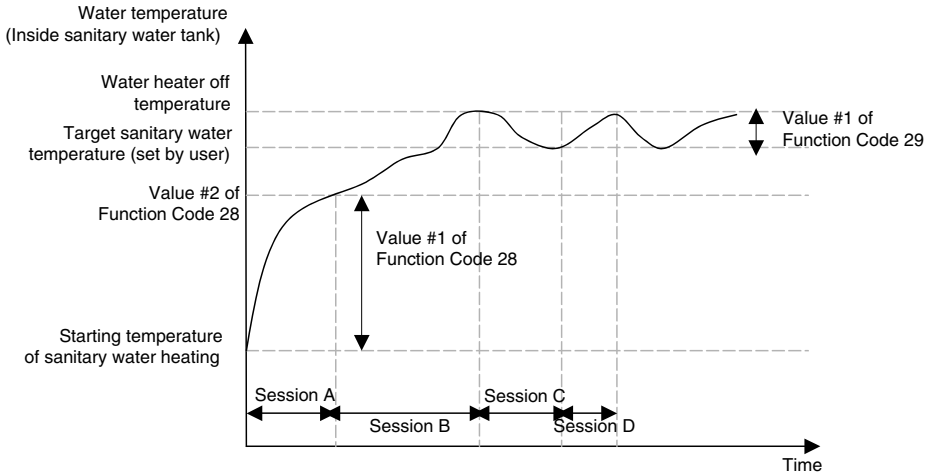

Session A : Heating by AWHP compressor cycle
Session B : Heating by water heater
Session C : No heating (Water heater is Off)
Session D : Heating by water heater

NOTICE

Sanitary water heating does not operate when it is disabled.

Enabling / Disabling of sanitary water heating is determined by pushing button.

When icon is displayed on the remote controller, sanitary water heating is enabled. (by button input or scheduler programming)

- **Function Code 2A** : Miscellaneous setting
  - Value #1 of Function Code 2A : determine electric heater and sanitary tank heater on and off.
  - Value #2 of Function Code 2A : not used.
  - Example : If Value #1 is set as ‘0’, then electric heater and sanitary tank heater are on and off according to control logic. If Value #1 is set as ‘1’, then electric heater is never turned on and only water heater is on and off according to control logic.

- **Function Code 2B** : Sanitary water heating timers

  Determine following time duration : operation time of sanitary tank heating, stop time of sanitary tank heating, and delay time of sanitary tank heater operating.
  - Value #1 of Function Code 2B : This time duration defines how long time sanitary tank heating can be continued.
  - Value #2 of Function Code 2B : This time duration defines how long time sanitary tank heating can be stopped. It is also regarded as time gap between sanitary tank heating cycle.
  - Value #3 of Function Code 2B : This time duration defines how long time sanitary tank heater will not be turned on in sanitary water heating operation.
  - Example of timing chart :

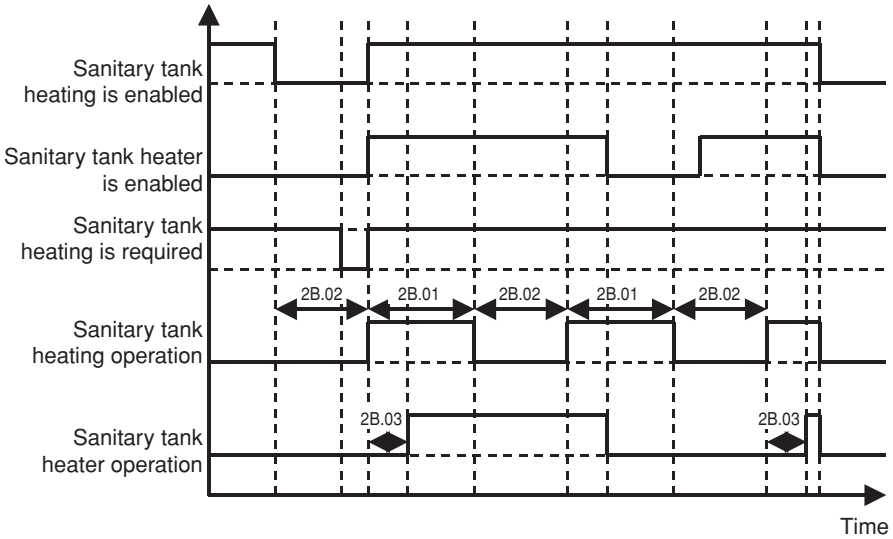

8. Check Points, Maintenance and Troubleshooting

If everything is going well until now, it is time to start the operation and to take advantages of THERMAV™.

Before starting operation, pre-check points are described in this chapter. Some comments about maintenance and how to do troubleshooting are presented.

Check List before Starting Operation

⚠ CAUTION

Turn off the power before changing wiring or handling unit.

No	Category	Item	Check Point
1	Electricity	Field wiring	• All switches having contacts for different poles should be wired tightly according to regional or national legislation. • Only qualified person can proceed wiring. • Wiring and local-supplied electric parts should be complied with European and regional regulations. • Wiring should be following the wiring diagram supplied with the unit.
2		Protective devices	• Install ELB (earth leakage breaker) with 30mA.
3		Earth wiring	• Earth should be connected. Do not earth to gas or city water pipe, metallic section of a building, surge absorber, etc.
4		Power supply	• Use dedicated power line.
5		Terminal block wiring	• Connections on the terminal block (inside of the unit) should be tightened.
6	Water	Charged water pressure	• After water charging, the pressure gage (in front of the unit) should indicate 2.0~2.5 bar. Do not exceed 3.0 bar.
7		Air purge	• During water charging, air should be taken out through the hole of the air purge. • If water does not splash out when the tip (at the top of the hole) is pressed, then air purging is not completed yet. If well purged, the water will splash out like fountain. • Be careful when testing air purge. Splashed water may make your dress wet.
8		By-pass valve	• By-pass valve should be installed and adjusted to secure enough water flow rate. If water flow rate is low, flow switch error (CH14) can be occurred.
9	Unit Installation	Parts inspection	• There should be no apparently damaged parts inside the unit.
10		Refrigerant leakage	• Refrigerant leakage degrades the performance. If leakage found, contact qualified LG air conditioning installation person.
11		Drainage treatment	• While cooling operation, condensed dew can drop down to the bottom of the unit. In this case, prepare drainage treatment (for example, vessel to contain condensed dew) to avoid water drop.

Maintenance

To assure best performance of THERMAV, it is required to perform periodical check and maintenance. It is recommended to proceed following check list for once a year.

⚠ CAUTION

Turn off the power before proceeding maintenance

No	Category	Item	Check Point
1	Water	Water pressure	• In normal state, the pressure gage (inside of the unit) should indicate 2.0~2.5 bar. • If the pressure is less than 0.3 bar, please recharge the water.
2		Strainer(Water filter)	• Disassemble strainer. Then wash the strainer to make it clean. • While disassembling the strainer, be careful for water flood out.
3		Safety valve	• Open the switch of the safety valve and check if water is flood out through the drain hose. • After checking, close the safety valve.
4	Electricity	Terminal block wiring	• Look and inspect if there is loosen or defected connection on the terminal block.

Leakage test and Evacuation

Air and moisture remaining in the refrigerant system have undesirable effects as indicated below.
1. Pressure in the system rises.
2. Operating current rises.
3. Cooling(or heating) efficiency drops.
4. Moisture in the refrigerant circuit may freeze and block capillary tubing.
5. Water may lead to corrosion of parts in the refrigeration system.

Therefore, the the connecting tube inside unit must be checked for leak tight, and vacuumed to remove incondensible gas and moisture in the system.

Leakage Test

- Connect the manifold valve(with pressure gauges) and dry nitrogen gas cylinder to this service port with charge hoses.

⚠ CAUTION

Be sure to use a manifold valve for leakage test.
If it is not available, use a stop valve for this purpose. The "Hi" knob of the manifold valve must always be kept close.

- Pressurize the system to no more than 3.0 Mpa with dry nitrogen gas and close the cylinder valve when the gauge reading reached 3.0 Mpa Next, test for leaks with liquid soap.

⚠ CAUTION

To avoid nitrogen entering the refrigerant system in a liquid state, the top of the cylinder must be higher than its bottom when you pressurize the system. Usually, the cylinder is used in a vertical standing position.

1. Do a leakage test of all joints of the tubing. Bubbles indicate a leak. Be sure to wipe off the soap with a clean cloth.
2. After the system is found to be free of leaks, relieve the nitrogen pressure by loosening the charge hose connector at the nitrogen cylinder. When the system pressure is reduced to normal, disconnect the hose from the cylinder.

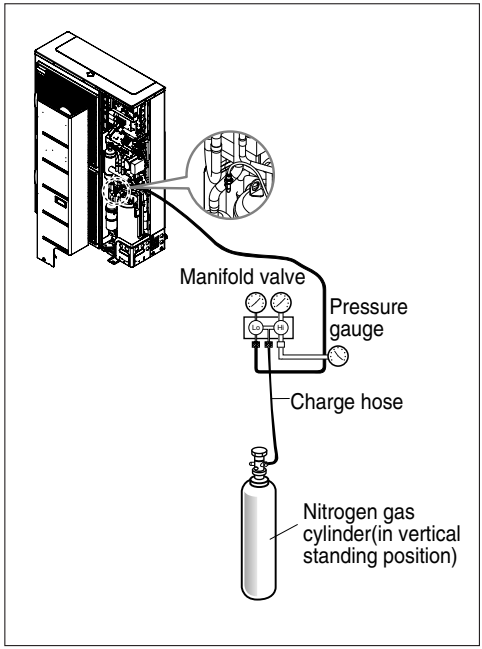

Note:

Fill in the f-gas Label attached on unit about the quantity of the fluorinated greenhouse gases. (This note about f-gas label may not apply depending on your unit type or market.)

① Manufacturing site (See Model Name label)

② Installation site (If possible being placed adjacent to the service points for the addition or removal of refrigerant.)

③ The total Charge (+)

Evacuation

1. Connect the charge hose end described in the preceding steps to the vacuum pump to evacuate the tubing and unit.
   Confirm the "Lo and Hi" knob of the manifold valve is open. Then, run the vacuum pump.
   The operation time for evacuation varies with tubing length and capacity of the pump. The following table shows the time required for evacuation.

Required time for evacuation when 30 gal/h vacuum pump is used.
➔ “30 min. or more”
➔ or “0.5 torr or less”

2. When the desired vacuum is reached, close the "Lo and Hi" knob of the manifold valve and stop the vacuum pump.

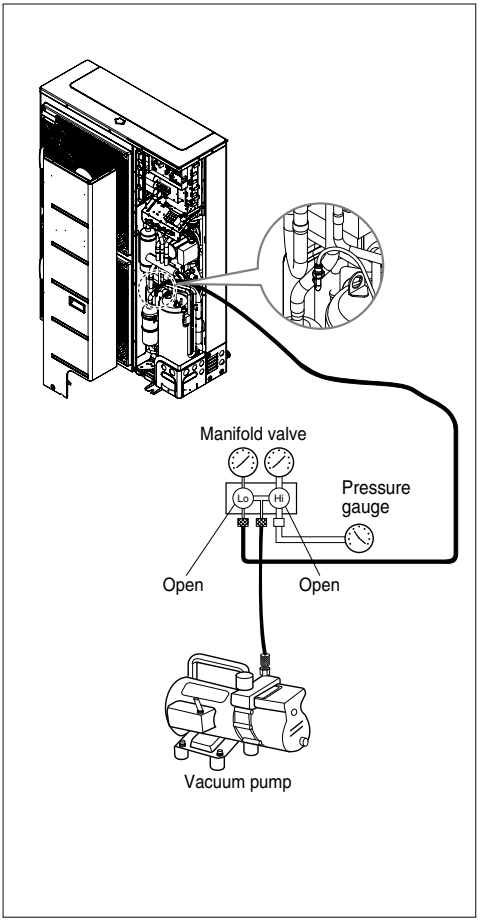

Finishing the Job

1. With a service valve wrench, turn the valve stem of liquid side valve counter-clockwise to fully open the valve.
2. Turn the valve stem of gas side valve counter-clockwise to fully open the valve.
3. Loosen the charge hose connected to the gas side service port slightly to release the pressure, then remove the hose.
4. Replace the flare nut and its bonnet on the gas side service port and fasten the flare nut securely with an adjustable wrench. This process is very important to prevent leakage from the system.
5. Replace the valve caps at both gas and liquid side service valves and fasten them tight.

This completes air purging with a vacuum pump.
The air conditioner is now ready to test run.

Troubleshooting

If THERMAV operates not properly or it does not start operation, please check following list.

⚠ CAUTION

Turn off the power before proceeding troubleshooting.

Troubleshooting for Problem while Operation

No	Problem	Reason	Solution
1	Heating or cooling is not satisfactory.	• Setting target temperature is not proper.	• Set target temperature correctly. • Check if temperature is water-based or air-based. See Function code 03 and 05 in chapter 8.
		• Charged water is not enough.	• Check pressure gage and charge more water until pressure gage is indicating 2.0~2.5 bar.
		• Water flow rate is low.	• Check if strainer gathers too much particles. If so, strainer should be cleaned. • Check if internal water pump speed is NOT set as 'High'. It should be set as 'High.' • Check if pressure gage indicates above 0.3 bar. • Check if water pipe is getting closed due to stacked particles or lime.
2	Although electric power supply is OK (remote controller displays information), the unit does not start working.	• Water inlet temperature is too high.	• If water inlet temperature is above 55°C, the unit does not operated for the sake of system protection.
		• Water inlet temperature is too low.	• If water inlet temperature is below 5°C, the unit does not operated for the sake of system protection. Wait while unit warms up the water inlet temperature.
3	Water pump noise.	• Air purging is not completely finished.	• Open the cap of air purge and charge more water until pressure gage is indicating 2.0~2.5 bar. • If water does not splash out when the tip (at the top of the hole) is pressed, then air purging is not completed yet. If well purged, the water will splash out like fountain.
		• Water pressure is low.	• Check if pressure gage indicates above 0.3 bar. • Check if the expansion tank and pressure gage operates well.
4	Water is flood out through drain hose.	• Too much water is charged.	• Flood out the water by opening the switch of the safety valve until pressure gage is indicating 2.0~2.5 bar.
		• Expansion tank is damaged.	• Replace the expansion tank.
5	Sanitary water is not hot.	• Thermal protector of water tank heater is activated.	• Open the side panel of the sanitary water tank and push the reset button of the thermal protector. (for more detail information, please refer to installation manual of sanitary water tank.)
		• Sanitary water heating is disabled.	• Push button and identify if icon is displayed on the remote controller.

Troubleshooting for Error Code

Code No.	Description	Cause	Normal Condition
01	Problem in Remote Room Air sensor	• Incorrect connection between sensor and PCB. • PCB fault • Sensor fault	• Resistance: 10k ohm at 25 centigrade. (unplugged) → for Remote Room Air sensor. • Resistance: 5k ohm at 25 centigrade. (unplugged) → for all sensors EXCEPT Remote Room Air sensor. • Voltage: 2.5Vdc at 25 centigrade. (plugged) (for all sensors) • Refer resistance-temperature table to check in different temperature.
02	Problem in Refrigerant (Inlet side) sensor		
06	Problem in Refrigerant (Outlet side) sensor		
08	Problem in Water Tank sensor		
16	Problems in sensors		
17	Problem in Water-inlet sensor		
18	Problem in Water-outlet sensor		
19	Problem in Water-interlim sensor		
03	Bad communication between remote controller and unit.	• Incorrect connection between sensor and PCB • PCB fault • Sensor fault	• Wire connection between remote controller and Main PCB Assembly 1 should be tight. • Output voltage of PCB should be 12Vdc.
05	Bad communication between Main PCB Assembly 2 and Main PCB Assembly 1 of the unit.	• The connector for transmission is disconnected. • The connecting wires are misconnected. • The communication line is broken. • Main PCB Assembly 2 is abnormal. • Main PCB Assembly 1 is abnormal.	• Wire connection between remote controller and Main PCB Assembly 1 should be tight.
53			
09	PCB Program (EEPROM) Fault	• Electrical or mechanical damage a the EEPROM	• This error can not be permitted.
14	Problem in Flow Switch	• Flow switch is open while internal water pump is working. • Flow switch is closed while internal water pump is not working. • Flow switch is open while DIP switch No. 5 of Main PCB Assembly 1 is set as ON.	• Flow switch should be closed while internal water pump is working or DIP switch No. 5 of Main PCB Assembly 1 is set as ON. • Flow switch should be open while internal water pump is not working.
15	Water pipe overheated	• Abnormal operation of electric heater. • Leaving water temperature is above 75°C.	• If there is no problem in electric heater control, possible maximum leaving water temperature is 75°C.
20	Thermal fuse is damaged	• Thermal fuse is cut off by abnormal overheating of internal electric heater. • Mechanical fault at thermal fuse • Wire is damaged.	• This error will not be happened if temperature of electric heater tank is below 90°C.

LG
Life's Good