DVD/CD RECEIVER
OWNER'S MANUAL

MODEL: LH-D6530
(Main Unit: LH-D6530A,
Speakers: LHS-D6530V, LHS-D6530T
LHS-D6530C, LHS-D6530W)

Before connecting up, operating or repairing this product, please read this instruction booklet carefully and completely.

Safety Precautions

CAUTION

RISK OF ELECTRIC SHOCK
DO NOT OPEN

CAUTION: TO REDUCE THE RISK OF ELECTRIC SHOCK
DO NOT REMOVE COVER (OR BACK)
NO USER-SERVICEABLE PARTS INSIDE
REFER SERVICING TO QUALIFIED SERVICE PERSONNEL.

This lightning flash with arrowhead symbol within an equilateral triangle is intended to alert the user to the presence of uninsulated dangerous voltage within the product's enclosure that may be of sufficient magnitude to constitute a risk of electric shock to persons.

The exclamation mark within an equilateral triangle is intended to alert the user to the presence of important operating and maintenance (servicing) instructions in the instructions accompanying the product.

WARNING: TO PREVENT FIRE OR ELECTRIC SHOCK HAZARD, DO NOT EXPOSE THIS PRODUCT TO RAIN OR MOISTURE.

WARNING: Do not install this equipment in a confined space such as a book case or similar unit.

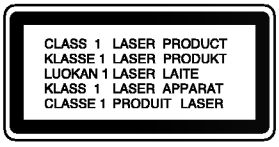

CAUTION:

This DVD/CD receiver employs a Laser System.

To ensure proper use of this product, please read this owner's manual carefully and retain it for future reference. Should the unit require maintenance, contact an authorized service location (see service procedure).

Performing controls, adjustments, or carrying out procedures other than those specified herein may result in hazardous radiation exposure.

To prevent direct exposure to laser beam, do not try to open the enclosure. Visible laser radiation when open. DO NOT STARE INTO BEAM.

CAUTION: The apparatus should not be exposed to water (dripping or splashing) and no objects filled with liquids, such as vases, should be placed on the apparatus.

NOTES ON COPYRIGHTS:

It is forbidden by law to copy, broadcast, show, broadcast via cable, play in public, or rent copyrighted material without permission.

This product features the copy protection function developed by Macrovision. Copy protection signals are recorded on some discs. When recording and playing the pictures of these discs on a VCR, picture noise will appear.

This product incorporates copyright protection technology that is protected by method claims of certain U.S. patents and other intellectual property rights owned by Macrovision Corporation and other rights owners. Use of this copyright protection technology must be authorized by Macrovision Corporation, and is intended for home and other limited viewing uses only unless otherwise authorized by Macrovision Corporation. Reverse engineering or disassembly is prohibited.

SERIAL NUMBER: The serial number is located on the back of this unit. This number is unique to this unit and not available to others. You should record requested information here and retain this guide as a permanent record of your purchase.

Model No. _____

Serial No. _____

Table of Contents

Introduction

Safety Precautions 2
Table of Contents 3
Before Use 4-5
Playable Discs 4
Precautions 5
Notes on Discs 5
About Symbols 5
Front Panel and Display Window 6
Remote Control 7
Rear Panel 8

Preparation

Connections 9-13
Connecting to a TV 9
Connecting to Optional Equipment 10
Aerial Connections 11
Speaker System Connection 12
Speaker Positioning 13
Before Operation 14-19
Mini Glossary for Audio Stream & Surround Mode 14
Sound Mode 14
General Explanation. 15
On-Screen Display 15-16
Initial Settings 17-19
- *Initial Settings General Operation. 17*
- *Language 17*
- *Picture. 17*
- *Speaker Setup. 18*
- *Others 18*
- *Parental Control. 19*

Operation

DVD and Video CD Operation 20-23
Playing a DVD and Video CD. 20
General Features 20
- *Moving to another TITLE/GROUP 20*
- *Moving to another CHAPTER/TRACK 20*
- *Search. 20*
- *Pause 20*
- *Still Picture and Frame-by-Frame Playback . 21*
- *Slow Motion. 21*
- *Repeat A-B 21*
- *Repeat 21*
- *Time Search 21*
- *3D Surround 22*
- *Zoom. 22*
- *Marker Search. 22*

Special DVD Features 22
- *Title Menu 22*
- *Disc Menu 22*
- *Camera Angle 22*
- *Changing the Audio Language. 22*
- *Changing the Audio Channel 22*
- *Subtitles 22*

DVD Audio Discs 23
- *Moving to another GROUP 23*
- *Viewing another PAGE. 23*

Audio CD and MP3/WMA Disc Operation 24-25
Playing an Audio CD and MP3/WMA Disc 24
Notes on MP3/WMA Recordings 24
- *Pause 25*
- *Moving to another Track 25*
- *Repeat Track/All/Off. 25*
- *Search. 25*
- *Repeat A-B 25*
- *3D Surround 25*
- *Changing the Audio Channel 25*

JPEG Disc Operation 26
Viewing a JPEG disc 26
- *Moving to another File 26*
- *Still Picture 26*
- *To flip the picture 26*
- *To rotate picture. 26*
- *Notes on JPEG Recordings 26*

Programmed Playback 27
Programmed Playback with Audio CD and MP3/WMA Disc 27
Programmed Playback with Video CD 27
Speaker Setup 28
Additional Information 28
Last Condition Memory 28
System Select 28
Radio Operation 29
Presetting the radio stations. 29
Listening to the radio 29
Other Function 30
Sleep Timer Setting 30
Dimmer 30
Mute 30
Using Headphone Jack 30
Selcting input source 30

Reference

Language Code List 31
Country Code List 32
Troubleshooting 33-34
Specification 35

About the symbols for instructions

⚠ Indicates hazards likely to cause harm to the unit itself or other material damage.

Indicates special operating features of this unit.

Indicates tips and hints for making the task easier.

Manufactured under license from Dolby Laboratories. "Dolby", "Pro Logic", and the double-D symbol are trademarks of Dolby Laboratories. Confidential Unpublished works. Copyright 1992-1997 Dolby Laboratories. All rights reserved.

Manufactured under license from Digital Theater Systems, Inc. US Pat. No. 5,451,942 5,956,674, 5,974,380, 5,978,762 and other worldwide patents issued and pending. "DTS" and "DTS Digital Surround" are registered trademarks of Digital Theater Systems, Inc. Copyright 1996, 2000 Digital Theater Systems, Inc. All rights reserved.

Before Use

Playable Discs

DVD VIDEO	DVD video discs (8 cm / 12 cm disc)
DVD AUDIO	DVD audio discs (8 cm / 12 cm disc)
COMPACT disc DIGITAL VIDEO	Video CD (VCD) (8 cm / 12 cm disc)
COMPACT disc DIGITAL AUDIO	Audio CD (8 cm / 12 cm disc)

In addition, this unit can play a DVD-RW, DVD+RW, Kodak PICTURE CD and CD-R or CD-RW that contains audio titles, MP3, WMA or JPEG files.

Notes

– Depending on the conditions of the recording equipment or the CD-R/RW (or DVD-RW, DVD+RW) disc itself, some CD-R/RW (or DVD-RW, DVD+RW) discs cannot be played on the unit.
– Do not attach any seal or label to either side (the labeled side or the recorded side) of a disc.
– Do not use irregularly shaped CDs (e.g., heart-shaped or octagonal). It may result in malfunctions.

Notes on DVDs and Video CDs

Some playback operations of DVDs and Video CDs may be intentionally fixed by software manufacturers. As this unit plays DVDs and Video CDs according to disc content designed by the software manufacturer, some playback features of the unit may not be available or other functions may be added.
Make sure to also refer to the instructions supplied with the DVDs and Video CDs. Some DVDs made for business purposes may not be able to be played on the unit.

Regional code of the DVD/CD receiver and DVDs

This DVD/CD receiver is designed and manufactured for playback of region "4" encoded DVD software.
The region code on the labels of some DVDs indicates which type of player can play those discs. This unit can only play DVDs labelled "4" or "ALL". If you try to play any other discs, the message "Check Regional Code" will appear on the TV screen.
Some DVDs that have no region code label may still be subject to area restrictions and therefore not playable.

Disc-related terms

Title (DVD video discs only)
The main film content or accompanying feature content or additional feature content, or music album.
Each title is assigned a title reference number enabling you to locate it easily.

Chapter (DVD video discs only)
Sections of a picture or a musical piece that are smaller than titles. A title is composed of one or several chapters. Each chapter is assigned a chapter number, enabling you to locate the chapter you want. Depending on the disc, chapters may not be recorded.

Group (DVD audio discs only)
The main audio content or accompanying feature content or additional feature content, or music album.
Each group is assigned a group reference number enabling you to locate it easily.

Track (DVD audio discs, Video CD and audio CD only)
Sections of a picture or a musical piece on a video CD or an audio CD. Each track is assigned a track number, enabling you to locate the track you want.

Scene
On a video CD with PBC (Playback control) functions, moving pictures and still pictures are divided into sections called "Scenes". Each scene is displayed in the menu screen and assigned a scene number, enabling you to locate the scene you want.
A scene is composed of one or several tracks.

Types of video CDs

There are two types of video CDs:

Video CDs equipped with PBC (Version 2.0)
PBC (Playback control) functions allow you to interact with the system via menus, search functions, or other typical computer-like operations. Moreover, still pictures of high resolution can be played if they are included in the disc.

Video CDs not equipped with PBC (Version 1.1)
Operated in the same way as audio CDs, these discs allow playback of video pictures as well as sound, but they are not equipped with PBC.

Precautions

Handling the unit

When shipping the unit
The original shipping carton and packing materials may come in handy. For maximum protection, re-pack the unit as it was originally packed at the factory.

When setting up the unit
The picture and sound of a nearby TV, VCR, or radio may be disturbed during playback. In this case, position the unit away from the TV, VCR, or radio, or turn off the unit after removing the disc.

To keep the exterior surfaces clean
Do not use volatile liquids, such as insecticide spray, near the unit. Do not leave rubber or plastic products in contact with the unit for a long period of time. They will leave marks on the surface.

Cleaning the unit

To clean the cabinet
Use a soft, dry cloth. If the surfaces are extremely dirty, use a soft cloth lightly moistened with a mild detergent solution. Do not use strong solvents such as alcohol, benzene, or thinner, as these might damage the surface of the unit.

To obtain a clear picture
The DVD/CD receiver is a high-tech, precision device. If the optical pick-up lens and disc drive parts are dirty or worn, the picture quality will be poor.
Regular inspection and maintenance are recommended after every 1,000 hours of use. (This depends on the operating environment.)
For details, please contact your nearest dealer.

Notes on Discs

Disc Handling

Do not touch the playback side of the disc.
Hold the disc by the edges so that fingerprints will not get on the surface.
Do not stick paper or tape on the disc.

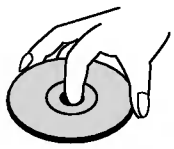

Storing discs

After playing, store the disc in its case.
Do not expose the disc to direct sunlight or sources of heat, or leave it in a parked car exposed to direct sunlight, as there may be a considerable temperature increase inside the car.

Cleaning discs

Fingerprints and dust on the disc can distort the picture or reduce sound quality. Before playing, clean the disc with a clean cloth. Wipe the disc from the centre outwards.

Do not use strong solvents such as alcohol, benzene, thinner, commercially available cleaners, or anti-static spray intended for vinyl records.

About Symbols

About the ⊘ symbol display

" ⊘ " may appear on the TV screen during operation. This icon means the function explained in this owner's manual is not available on that specific DVD video disc.

About the disc symbols for instructions

A section whose title has one of the following symbol is applicable only to the disc represented by the symbol.

- DVD Video discs
- DVD Audio discs
- Video CDs with the PBC (playback control) function.
- Video CDs without the PBC (playback control) function.
- Audio CDs.
- MP3 disc.
- WMA disc.
- JPEG disc.

Front Panel and Display Window

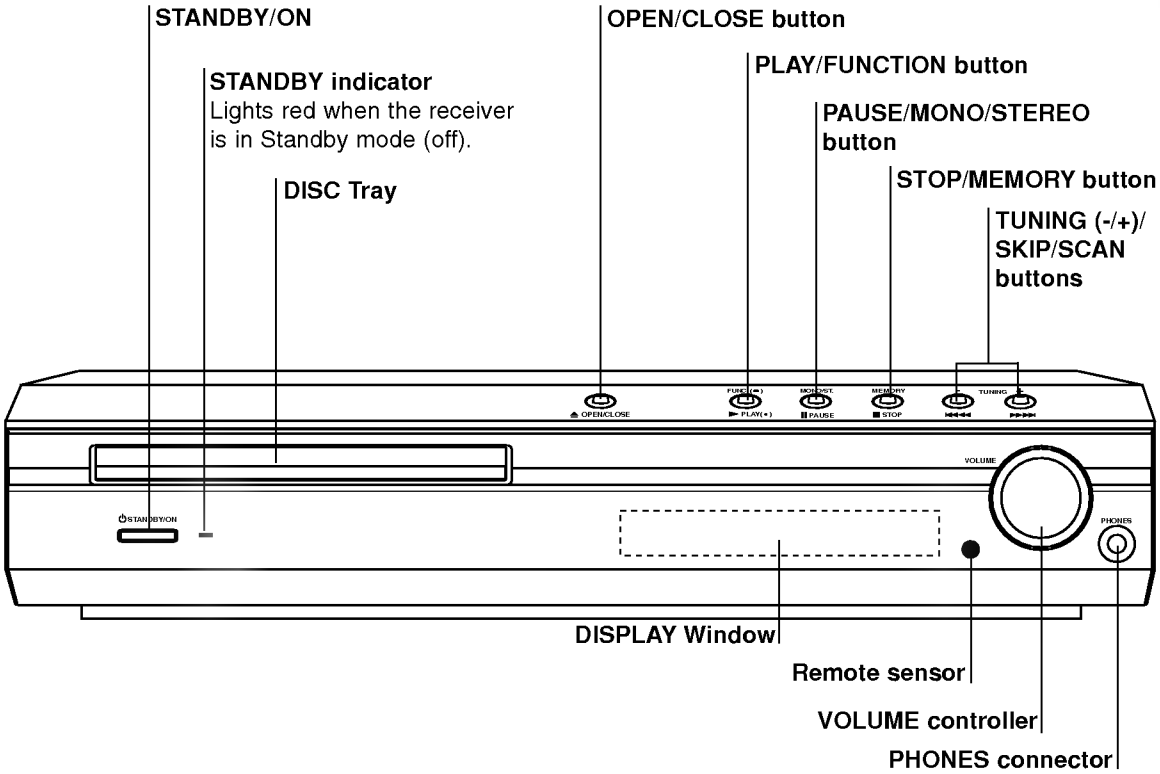

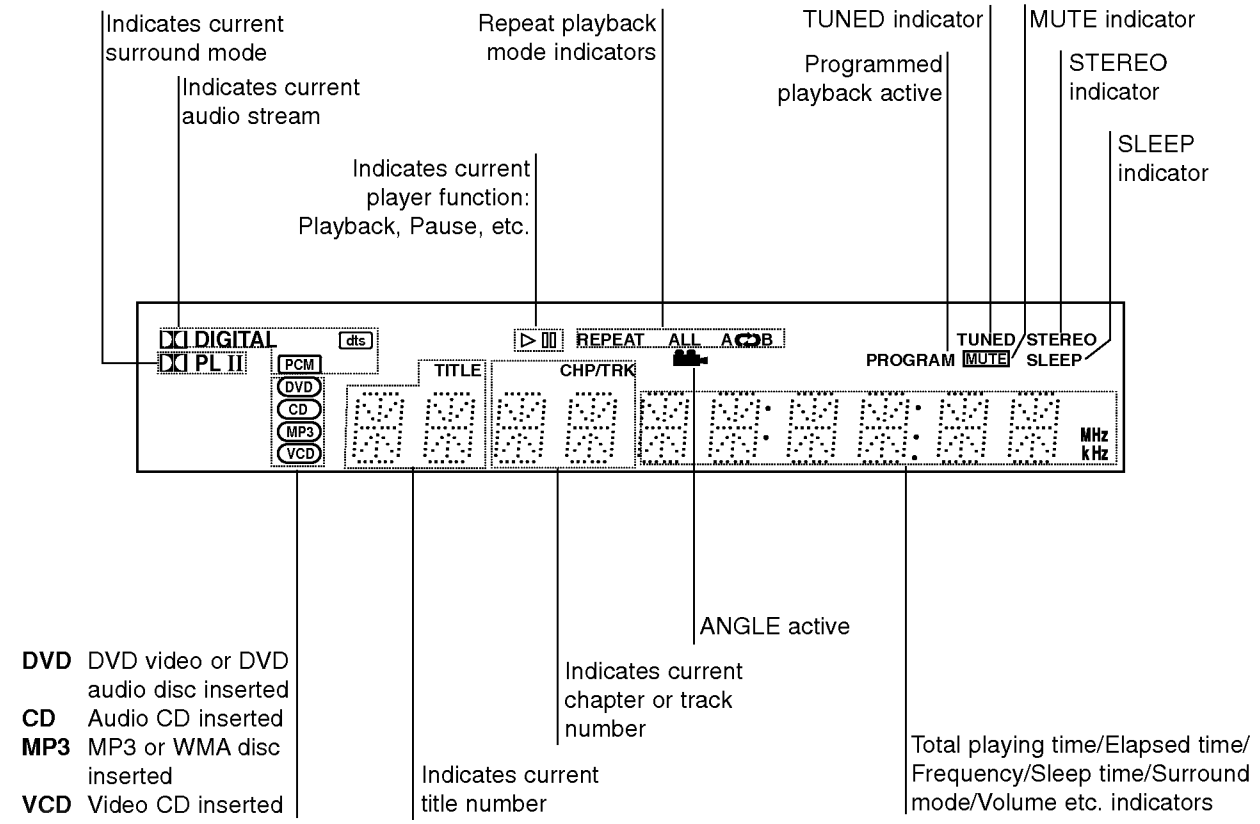

DVD DVD video or DVD audio disc inserted
CD Audio CD inserted
MP3 MP3 or WMA disc inserted
VCD Video CD inserted

Remote Control

OPEN/CLOSE button
BAND button
CD/DVD button
DIMMER button
NUMBER buttons
REPEAT button
PROGRAM button
CLEAR button
PRESET(+/-) buttons
ZOOM button
ARROW buttons
For use in highlighting a selection on a GUI menu screen, TITLE and MENU screen.
MENU button
Use the MENU button to display the menu screen included on DVD video discs.
SETUP button
TITLE button
Use the TITLE button to display the title screen included on DVD video discs.
SLOW SCAN (◀◀ / ▶▶) buttons
MARKER button

POWER button
AUX button
MUTE button
SLEEP button
REPEAT A-B button
SOUND MODE button
PRO LOGIC II button
AUDIO button
VOLUME (+/-) buttons
SUBTITLE button
RETURN button
ENTER button
DISPLAY button
STOP button
PAUSE/STEP button
PLAY button
SKIP/SCAN (|◀◀ /▶▶|) buttons
Press and hold button for about two seconds for search function.
ANGLE button
SEARCH button

Remote Control Operation Range

Point the remote control at the remote sensor and press the buttons.

- **Distance:** About 23 ft (7 m) from the front of the remote sensor
- **Angle:** About 30° in each direction in front of the remote sensor

Remote control battery installation

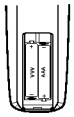

Remove the battery cover on the rear of the remote control, and insert two R03 (size AAA) batteries with ⊕ and ⊖ aligned correctly.

⚠ **Caution**

Do not mix old and new batteries. Never mix different types of batteries (standard, alkaline, etc.).

Rear Panel

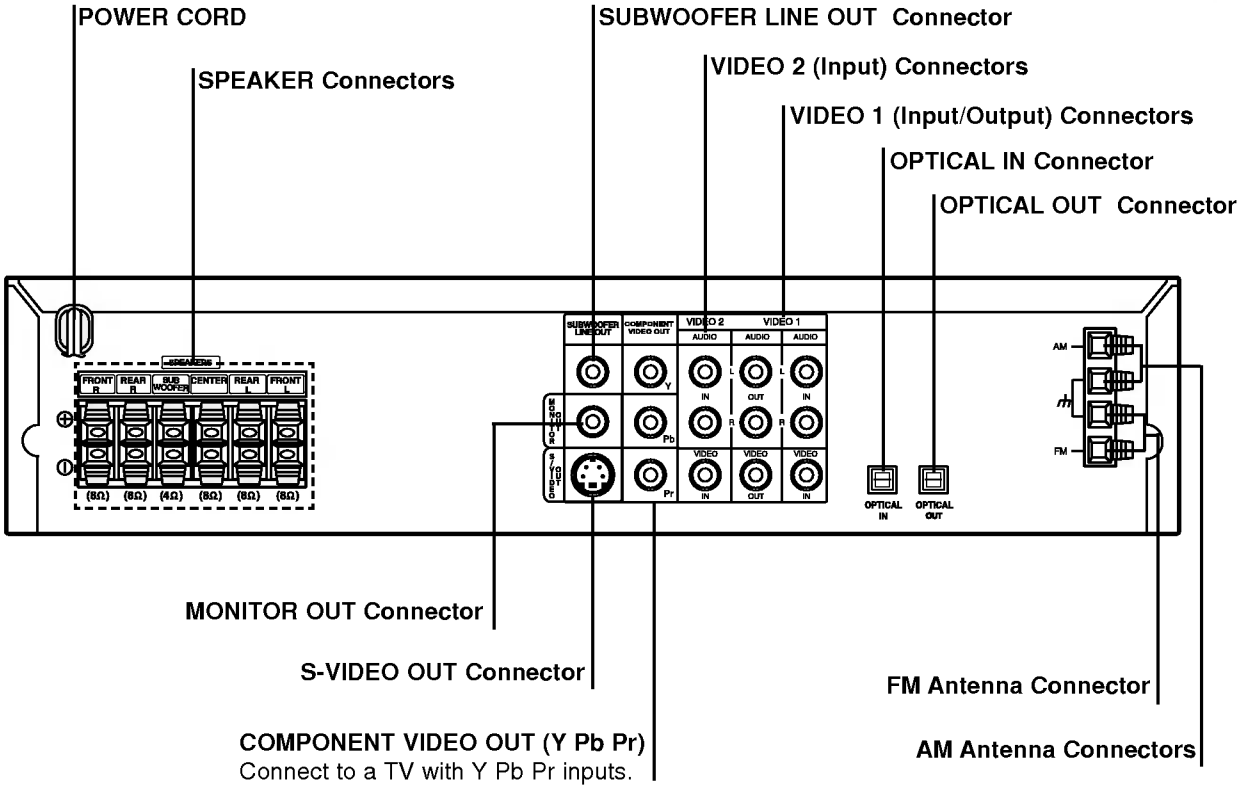

⚠

Do not touch the inner pins of the jacks on the rear panel. Electrostatic discharge may cause permanent damage to the unit.

Connecting to a TV

- Make one of the following connections, depending on the capabilities of your existing equipment.

Tips

- Depending on your TV and other equipment you wish to connect, there are various ways you could connect the DVD/CD receiver. Use one of the connections described below.
- Please refer to the manuals of your TV, VCR, Stereo System or other devices as necessary to make the best connections.

⚠ Caution

– Make sure the DVD/CD receiver is connected directly to the TV. Select the correct AV input on your TV.
– Do not connect your DVD/CD receiver to TV via your VCR. The DVD image could be distorted by the copy protection system.

Video connection

1 Connect the MONITOR OUT jack on the DVD Receiver to the video in jack on the TV using the video cable supplied **(V)**.

2 Connect the Left and Right AUDIO OUT jacks of the DVD/CD Receiver to the audio left/right in jacks on the TV **(A)** using the audio cables.

S-Video connection

1 Connect the S-VIDEO OUT jack on the DVD/CD receiver to the S-Video in jack on the TV using the S-Video cable **(S)**.

2 Connect the Left and Right AUDIO OUT jacks of the DVD/CD receiver to the audio left/right in jacks on the TV **(A)** using the audio cables.

Component Video (Color Stream®) connection

1 Connect the COMPONENT VIDEO OUT jacks on the DVD/CD receiver to the corresponding in jacks on the TV using an Y Pb Pr cable **(C)**.

2 Connect the Left and Right AUDIO OUT jacks of the DVD/CD receiver to the audio left/right in jacks on the TV **(A)** using the audio cables.

Progressive Scan (ColorStream® pro) connection

- If your television is a high-definition or "digital ready" television, you may take advantage of the DVD/CD receiver's progressive scan output for the highest video resolution possible.
- If your TV does not accept the Progressive Scan format, the picture will appear scrambled if you try Progressive Scan on the DVD/CD receiver.

1 Connect the COMPONENT VIDEO OUT jacks on the DVD/CD receiver to the corresponding in jacks on the TV using an optional Y Pb Pr cable **(C)**.

2 Connect the Left and Right AUDIO OUT jacks of the DVD/CD receiver to the audio left/right in jacks on the TV **(A)** using the supplied audio cables.

Note

– Set the Progressive to "On" on the setup menu for progressive signal, see page 17.

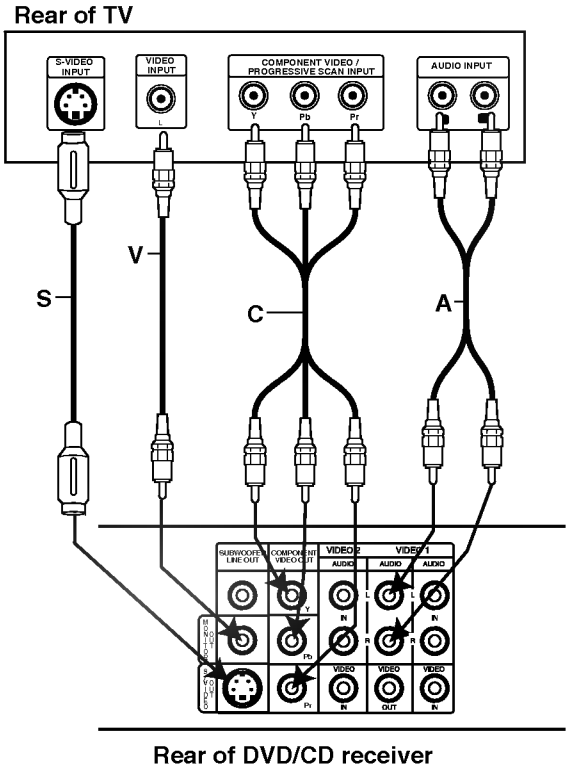

Connecting to Optional Equipment

1 Connect a VCR to the VIDEO 1 connectors.

2 Connect a additional VCR to the VIDEO 2 connectors.

3 Connect an optical output of DVD Player (or Digital Device etc) to the OPTICAL IN connector.

4 Connect an optical input of DVD Player (or Digital Device etc) to the OPTICAL OUT connector.

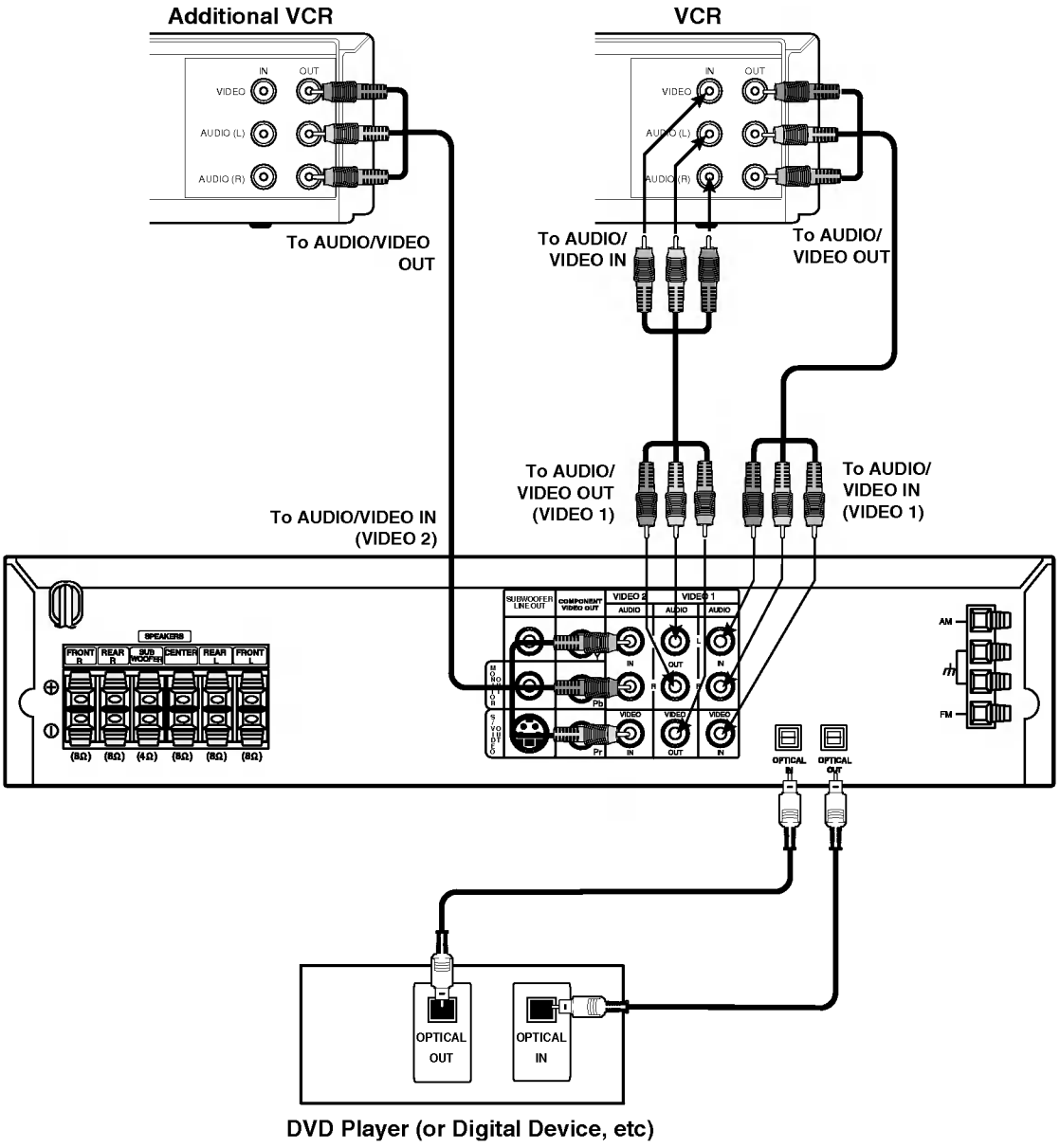

Note

- If the audio format of the digital output does not match the capabilities of your DVD/CD receiver, the receiver will produce a strong, distorted sound or no sound at all.

Aerial Connections

Connect the supplied FM/AM aerial for listening to the radio.

- Connect the AM loop aerial to the AM aerial connector.
- Connect he FM wire aerial to the FM aerial connector.

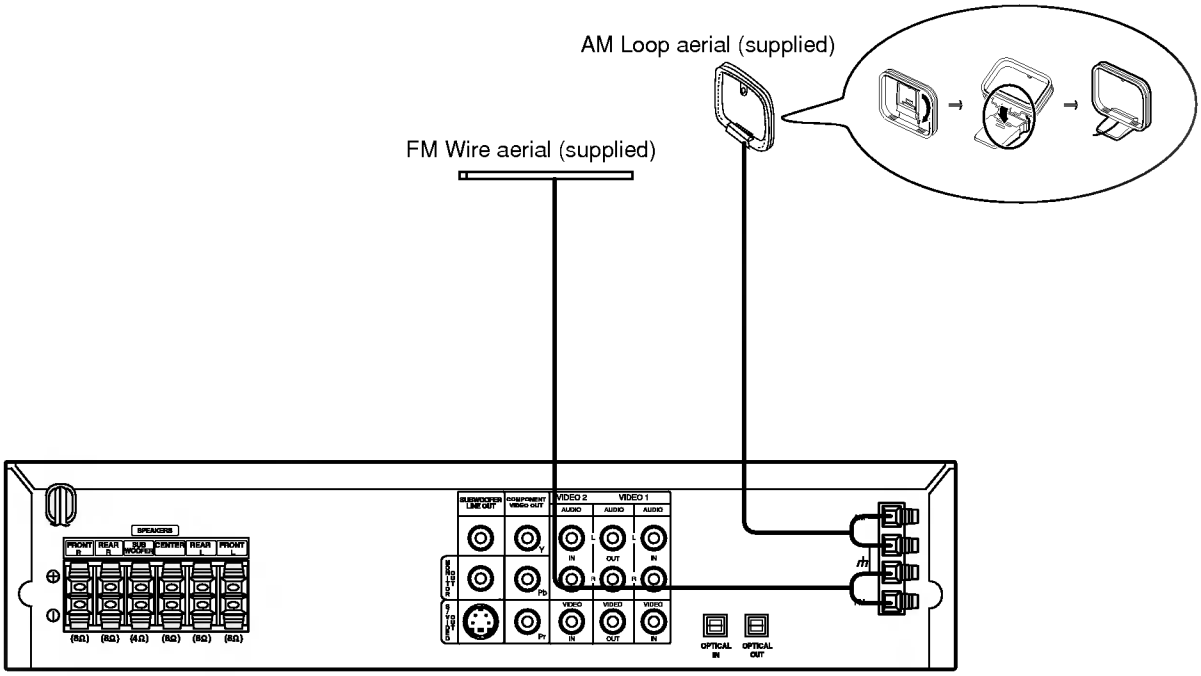

Notes

- To prevent noise pickup, keep the AM loop aerial away from the DVD/CD receiver and other components.
- Be sure to fully extend the FM wire aerial.
- After connecting the FM wire aerial, keep it as horizontal as possible.

Speaker System Connection

Connect the speakers using the supplied speaker cords.

To obtain the best possible surround sound, adjust the speaker parameters (volume, distance, etc.).

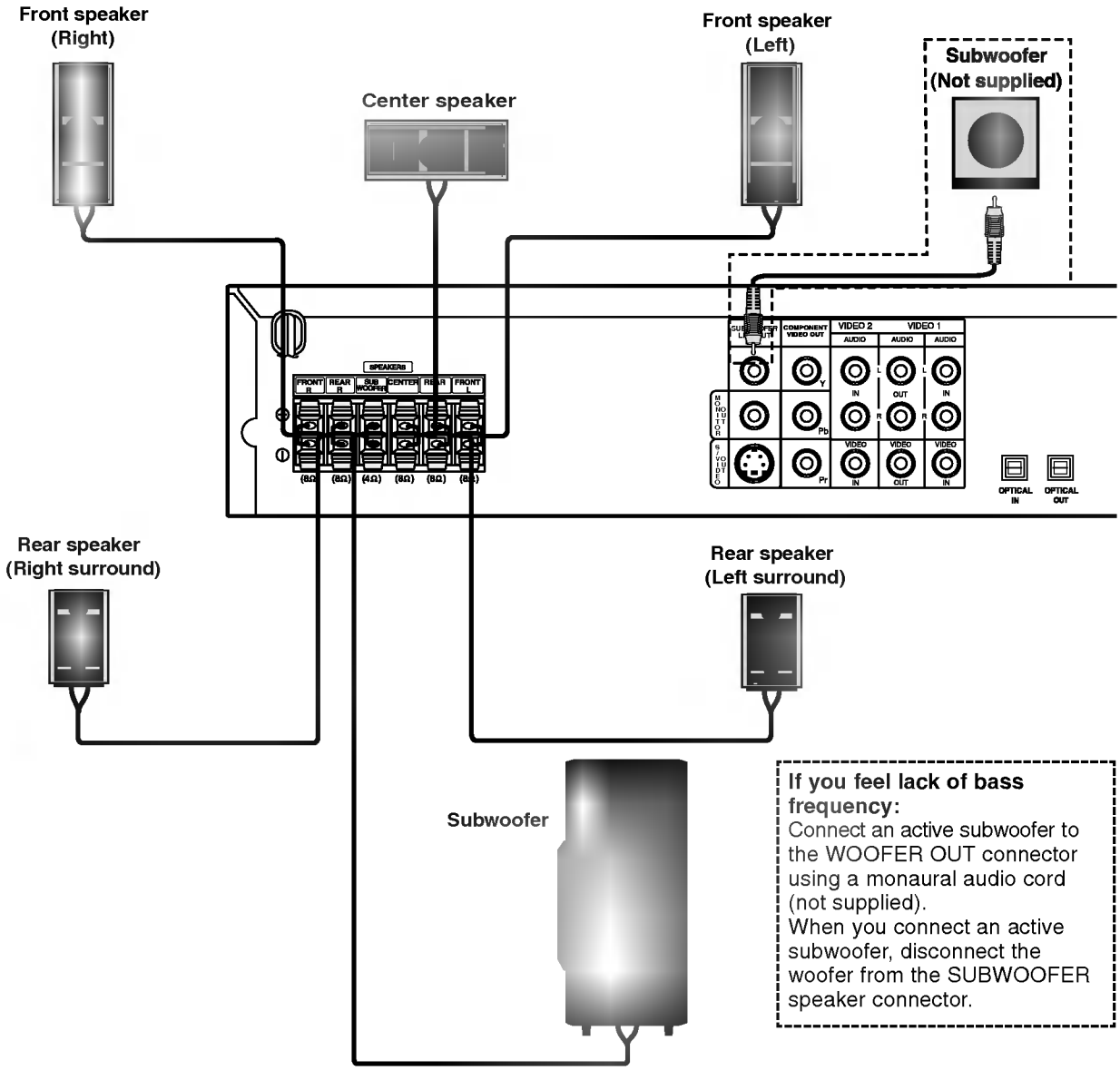

If you feel lack of bass frequency:
Connect an active subwoofer to the WOOFER OUT connector using a monaural audio cord (not supplied).
When you connect an active subwoofer, disconnect the woofer from the SUBWOOFER speaker connector.

Notes

- Be sure to match the speaker cable to the appropriate terminal on the components: + to + and – to –. If the cables are reversed, the sound will be distorted and will lack base.
- If you use front speakers with low maximum input rating, adjust the volume carefully to avoid excessive output on the speakers.
- Do not remove the front cover of supplied speaker.

Speaker Positioning

In the case of normal position use the 6 speakers (2 front speakers, centre speaker, 2 rear speakers and sub-woofer).
If you want to play the excellent bass sound, DTS digital surround or Dolby Digital surround, you should connect a subwoofer.

- **Front speakers**
  According to your listening position set up the speakers for equal distance. And by hearing position set up the interval between speakers to 45 degree.
- **Centre speaker**
  The centre speakers and front speakers are ideally the same height. But normally place it above or below the television.
- **Rear speakers**
  Place left and right behind the listening area. These speakers recreate sound motion and atmosphere required for surround sound playback. For best results, do not install the rear speakers too far behind the listening position and install them at or above the level of the listener's ears. It is also effective to direct the rear speakers towards a wall or ceiling to further disperse the sound.
  In the case of a smaller room size, if the audience is near to the rear wall set the rear speakers opposite each other, and set the rear speakers above 60 - 90 cm than the listener's ears.
- **Subwoofer**
  This can be placed in any front position.

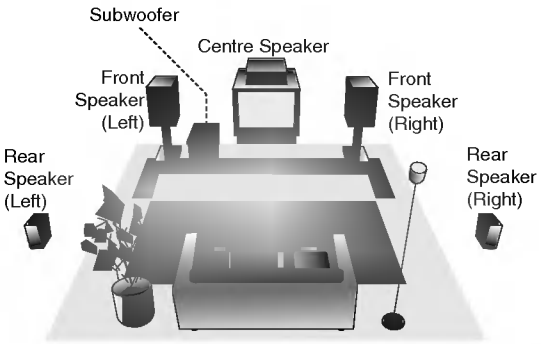

Speaker Positioning Example

Mini Glossary for Audio Stream & Surround mode

dts

Allows you to enjoy 5.1(or 6) discrete channels of high quality digital audio from DTS program sources such as discs, DVD and compact discs, etc.bearing the trademark. DTS Digital Surround delivers up to 6 channels of transparent audio(which means identical to the original masters) and results in exceptional clarity throughout a true 360 degree sound field. The term DTS is a trademark of DTS Technology, LLC. Manufactured under license from DTS Technology, LLC.

DIGITAL

The Dolby Digital surround format lets you enjoy up to 5.1 channels of digital surround sound from a Dolby Digital program source. If you play DVDs with " " mark, you can enjoy even better sound quality, greater spatial accuracy, and improved dynamic range.

PRO LOGIC

Use this mode when playing movie or Dolby Digital 2 channel which carries the " " mark. This mode provides the effect of being in a movie theatre or live concert house-an effect with an intensity which can only be obtained through DOLBY PRO LOGIC SURROUND. The effect of the front/back/left/right movement of the sound image, as well as the sense of fixed position in the sound image, is much clearer and more dynamic than before.

PRO LOGIC (II)

Dolby Pro Logic II creates five full-bandwidth output channels from two-channel sources. This is done using an advanced, high-purity matrix surround decoder that extracts the spatial properties of the original recording without adding any new sounds or tonal colorations.

MOVIE mode:
The Movie mode is for use with stereo television shows and all programs encoded in Dolby Surround. The result is enhanced soundfield directionality that approaches the quality of discrete 5.1-channel sound.

MUSIC mode:
The Music mode is for use with any stereo music recordings.

MATRIX mode:
The Matrix mode is the same as the Music mode except that the directional enhancement logic is turned off. It may be used to enhance mono signals by making them seem "larger." The Matrix mode may also find use in auto systems, where the fluctuations from poor FM stereo reception can otherwise cause disturbing surround signals from a logic decoder. The ultimate "cure" for poor FM stereo reception may be simply to force the audio to mono.

3D SURROUND

This unit can produce a 3D Surround effect, using 3D Surround Sound technology, which simulates multi-channel audio playback from two conventional stereo speakers instead of the five or more speakers normally required to listen to multi-channel audio from a home theatre. This feature works with DVD discs encoded with Dolby Pro Logic and Dolby Digital audio tracks.

BYPASS

Software with multichannel surround audio signals is played according to the way it was recorded.

Sound Mode

You can enjoy surround sound simply by selecting one of the pre-programmed sound fields according to the program you want to listen to.

A) By pressing SOUND MODE button

Each time you press **SOUND MODE** button, the sound mode is changed in the following order;

PRO LOGIC → PLII MOVIE → PLII MUSIC → PLII MATRIX → ROCK → POP → LIVE → DANCE → TECHNO → CLASSIC → SOFT → 3D SURROUND → BYPASS ...

Tips

- ROCK: Reproduces the acoustics of rock music.
- POP: Reproduces the acoustics of pop music.
- LIVE: Reproduces the acoustics of a 300-seat live.
- DANCE: Reproduces the acoustics of dance music.
- TECHNO: Reproduces the acoustics of techno music.
- CLASSIC: Reproduces the acoustics of orchestral music.
- SOFT: Ideal for soft acoustic sounds.

B) By pressing PL II button

Each time you press PL II button, the sound mode is changed in the following order;

PRO LOGIC → PLII MOVIE → PLII MUSIC → PLII MATRIX → BYPASS ...
(This function availabe 2-channel mode only)

When DVD is inserted.

You can change the sound mode of DVD (Dolby Digital, DTS, PRO LOGIC, etc) by pressing the **AUDIO** button on the remote during playback.
Although the DVD contents differ from disc to disc, the following explains the basic operation when this feature is used.

Each time you press **AUDIO** button, the sound mode of DVD is changed as the following order;

DIGITAL → dts → PCM → DIGITAL

For your reference

- **The DVD/CD Receiver memorizes the last mode settings for each source individually.**
- **You can identify the encoding format of program software by looking at its packaging.**
  - Dolby Digital discs are labelled with the logo.
  - Dolby Surround encoded programs are labelled with the logo.
  - DTS Digital Surround discs are marked with DTS.

Notes

- When you play sound tracks with 96kHz sampling frequency, the output signals will be converted to 48kHz (sampling frequency).
- Sound Mode is not applicable when headphone is used.

General Explanation

This manual gives basic instructions for operating the DVD/CD receiver. Some DVDs require specific operation or allow only limited operation during playback. When this occurs, the symbol ⊘ appears on the TV screen, indicating that the operation is not permitted by the DVD/CD receiver or is not available on the disc.

On-Screen Display

General playback status can be displayed on the TV screen. Some items can be changed on the menu.

On-screen display operation

1 **Press DISPLAY during playback.**

2 **Press ▲/▼ to select an item.**
The selected item will be highlighted.

3 **Press ◀/▶ to change the setting of an item.**
The number buttons can be also be used for setting numbers (e.g., title number). For some functions, press ENTER to execute the setting.

Temporary Feedback Field Icons

- TITLE — Repeat Title
- CHAPT — Repeat Chapter
- GROUP — Repeat Group (DVD audio discs only)
- TRACK — Repeat Track (non-PBC Video CDs and DVD audio discs only)
- ALL — Repeat All Tracks (non-PBC Video CDs only)
- A B — Repeat A-B
- OFF — Repeat Off
- Resume play from this point
- ⊘ — Action prohibited or not available

Notes

- Some discs may not provide all of the features on the on-screen display example shown below.
- If no button is pressed for 10 seconds, the on-screen display disappears.

Items		Function (Press ▲/▼ to select desired item)	Selection Method
Title Number	1 /3	**Shows the current title number and total number of titles, and** skips to the desired title number.	◀ / ▶, or Numbers, ENTER
Chapter Number		**Shows the current chapter number and total number of chapters, and** skips to the desired chapter number.	◀ / ▶, or Numbers, ENTER, SKIP
Time search	0:20:09	**Shows the elapsed playing time, and** searches the point directly from the elapsed time.	Numbers, ENTER
Audio language and Digital Audio Output mode	1 ENG DD 5.1 CH	**Shows the current audio soundtrack language, encoding method, and channel number, and** changes the setting.	◀ / ▶, or AUDIO
Subtitle language		**Shows the current subtitles language, and** changes the setting.	◀ / ▶, or SUBTITLE
Angle		**Shows the current angle number and total number of angles, and** changes the angle number.	◀ / ▶, or ANGLE
Sound	BYPASS	**Shows the current sound mode, and** changes the setting.	◀ / ▶, or SOUND MODE

On-Screen Display (Continued)

Items		Function (Press ▲/▼ to select desired item)	Selection Method
Group Number	2 /6	**Shows the current group number and total number of groups, and** skips to the desired group number.	◀ / ▶, or Numbers, ENTER
Track Number		**Shows the current track number and total number of tracks, and** skips to the desired track number.	◀ / ▶, or Numbers, ENTER
Time search		**Shows the elapsed playing time.(Display only)**	–
DVD Audio Output mode	1 PPCM 5 CH	**Shows the current encoding method, and channel number, and** changes the setting.	◀ / ▶, or AUDIO
Subtitle language		**Shows the current subtitles language, and** changes the setting.	◀ / ▶, or SUBTITLE
Page (or Angle)	or	**Shows the current page (or angle) number and total number of pages (or angle), and** changes the page (or angle) number.	◀ / ▶, or ANGLE

Items		Function (Press ▲/▼ to select desired item)	Selection Method
Track Number	1 /4	**Shows the current track number, total number of tracks and PBC On mode, and** skips to the desired track number.	◀ / ▶, or Numbers, ENTER
Time	0:20:09	**Shows the elapsed playing time (Display only)**	–
Audio Channel	STER.	**Shows the audio channel, and** changes the audio channel.	◀ / ▶, or AUDIO
Sound	BYPASS	**Shows the current sound mode, and** changes the setting.	◀ / ▶, or SOUND MODE

Initial Settings

You can set your own Personal Preferences on the player.

Initial Settings General Operation

1 Press SETUP.
The setup menu appears.

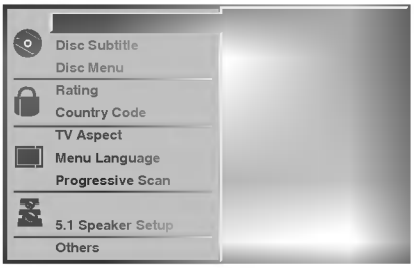

2 Press ▲/▼ to select the desired item.
The screen will show the current setting for the selected item, as well as alternate setting(s).

3 While the desired item is selected, press ▶, then ▲/▼ to select the desired setting.

4 Press ENTER to confirm your selection.
Some items require additional steps.

5 Press SETUP, RETURN, or PLAY to exit the setup menu.

Language

Disc Language

Select a language for the disc's Menu, Audio, and Subtitle.
Original : The original language set for the disc is selected.
Other : To select another language, press number buttons to enter the corresponding 4-digit number according to the language code list on page 31. If you enter the wrong language code, press CLEAR.

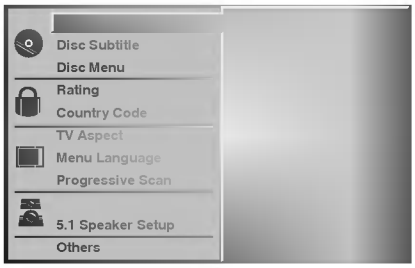

Menu Language

Select a language for the setup menu. This is the menu you see when you press SETUP.

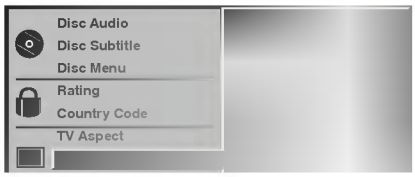

Picture

TV Aspect

4:3 Letterbox: Select when a standard 4:3 TV is connected. Displays theatrical images with masking bars above and below the picture.
4:3 Panscan: Select when a conventional TV set is connected. The video material formatted in the Pan & Scan style is played back in that style (Both sides of the picture are cut off).
16:9 Wide: Select when a 16:9 wide TV is connected.

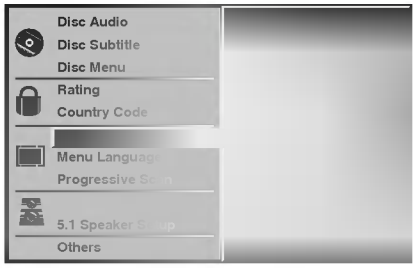

Progressive Scan

Progressive Scan Video provides the highest quality pictures with less flickering.
If you are using the COMPONENT VIDEO OUT jacks, but are connecting the DVD Player to a standard (analog) television, set Progressive Scan to Off.
If you are using the Component Video jacks for connection to a TV or monitor that is compatible with a progressive scan signal, set Progressive Scan to On.

⚠Caution
Once the setting for progressive scan output is entered, an image will only be visible on a progressive scan compatible TV or monitor. If you set Progressive Scan to On in error, you must reset the unit. Press STOP to stop any disc that is playing. Next, press STOP again and hold it for five seconds before releasing it. The video output will be restored to the standard setting, and a picture will once again be visible on a conventional analog TV or monitor.

Note
The Progressive Scan is available in NTSC mode. (For further details about system select mode, please refer to page 28.)

Speaker Setup

5.1 Speaker settings

Select speaker settings, including volume balance and delay time, or test the speaker settings.
Speaker settings are only active on the Analog Multi-Channel Output. (See "Speaker Setup", page 28.)

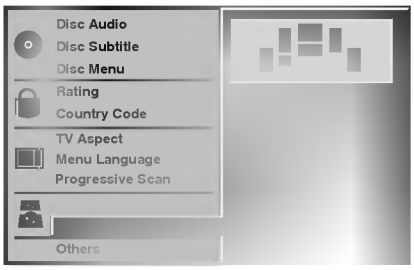

Others

The DRC, Vocal, PBC and Auto Play settings can be changed.

- Press ▲/▼ to select the desired item and press ENTER. The setting of the selected item is changed between On and Off.

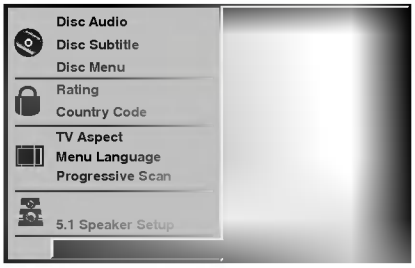

Dynamic Range Control (DRC)

With the DVD format, you can hear a program's soundtrack in the most accurate and realistic presentation possible, thanks to digital audio technology. However, you may wish to compress the dynamic range of the audio output (the difference between the loudest sounds and the quietest ones). Then, you may listen to a movie at a lower volume without losing clarity of sound. Set DRC to On for this effect.

Vocal

Set Vocal to On only when a multi-channel karaoke DVD is playing. The karaoke channels on the disc will mix into normal stereo sound.

PBC

Set Playback Control (PBC) to On or Off.
On: Video CDs with PBC are played according to the PBC.
Off: Video CDs with PBC are played the same way as Audio CDs.

Auto Play

You can set up the DVD/CD receiver so a DVD disc automatically starts playing whenever the DVD is inserted.
If Auto Play mode is set to On, this DVD/CD receiver will search a title that playback time is longest and then play back the title automatically.
On: Auto Play function is activated.
Off: Auto Play function is not activated.

Note
The Auto Play function may not work for some DVDs.

Parental Control

Rating

Movies on DVDs may contain scenes not suitable for children. Therefore, discs may contain Parental Control information that applies to the complete disc or to certain scenes on the disc. These scenes are rated from 1 to 8, and alternatively, more suitable scenes are available for selection on some discs. Ratings are country-dependent. The Parental Control feature allows you to prevent discs from being played by your children or to have certain discs played with alternative scenes.

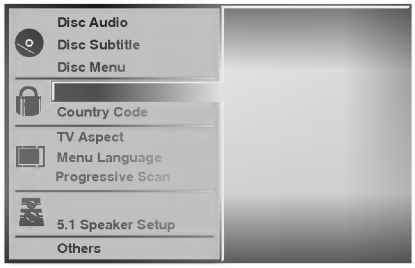

1 **Select "Rating" on the Setup menu using the ▲/▼ buttons.**

2 **While "Rating" is selected, press ▶.**

3 **When you have not entered a password.**
Enter a 4-digit password using the number buttons to create a personal 4-digit security password. then press ENTER. Enter the 4-digit password again and press ENTER to verify.
When you have already registered a password;
Enter a 4-digit password using the numbered buttons to confirm the personal 4-digit security password, then press ENTER.

If you make a mistake before pressing ENTER, press CLEAR and enter 4-digit security password again.

4 **Select a rating from 1 to 8 using the ▲/▼ buttons. One (1) has the least playback restrictions. Eight (8) has the most playback restrictions.**
Unlock: *If you select Unlock, Parental Control is not active. The disc will play in full.*
Ratings 1 to 8: *Some discs contain scenes not suitable for children. If you set a rating for the player, all disc scenes with the same rating or lower will be played. Higher rated scenes will not be played unless an alternative scene is available on the disc. The alternative must have the same rating or a lower one. If no suitable alternative is found, playback will stop. You must enter the 4-digit password or change the rating level in order to play the disc.*

5 **Press ENTER to confirm your rating selection, then press SETUP to exit the menu.**

Note

This function may not work for some DVDs.

Country Code

Enter the code of a country/area whose standards were used to rate the DVD video disc, referring to the list (See "Country Code List", page 32.).

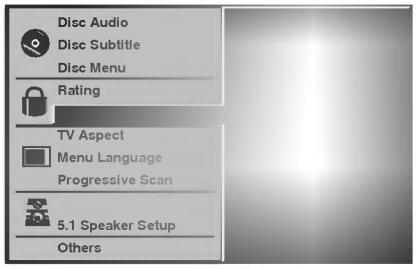

1 **Select Country Code using the ▲/▼ buttons on the setup menu.**

2 **While Country Code is selected, press ▶.**

3 **Follow step 3 of "Rating" on left.**

4 **Select the first character using the ▲/▼ buttons.**

5 **Shift the cursor using ▶ button and select the second character using ▲/▼ buttons.**

6 **Press ENTER to confirm your country code selection, then press SETUP to exit the menu.**

Note

Confirmation of the 4-digit password is necessary when the code is changed (see "Changing the 4-digit code" below.).

Changing the 4-digit code

1 Follow Steps 1-2 as shown above to the left (Rating).
2 Enter the old code, then press ENTER.
3 Select Change using ▲/▼ buttons then press ENTER.
4 Enter the new 4-digit code, then press ENTER.
5 Enter exactly the same code a second time and verify by pressing ENTER.
6 Press SETUP to exit the menu.

If you forget your 4-digit code

If you forget your password, to clear the current password, follow the procedure below.

1 Press SETUP to display the setup menu.
2 Use the Number buttons to enter the 6-digit number "210499".
The 4-digit password is cleared.
3 Enter a new code as shown above to the left (Rating).

Operation with DVD and Video CD

Playing a DVD and Video CD

Playback Setup

- Turn on the TV and select the video input source connected to the DVD/CD receiver.
- Audio system: Turn on the audio system and select the input source connected to the DVD/CD receiver.

1 **Press OPEN/CLOSE to open the disc tray.**

2 **Load your chosen disc in the tray, with the playback side facing down.**

3 **Press OPEN/CLOSE to close the tray.**
READING appears on the TV screen, and playback starts automatically. If playback does not start, press PLAY.
In some cases, the disc menu might appear instead.

If a menu screen is displayed

The menu screen may be displayed first after loading a DVD or Video CD which offers a menu.

Use the ◀ ▶▲▼ buttons to select the title/chapter you want to view, then press ENTER to start playback.
Press TITLE or MENU to return to the menu screen.

Use the ◀ ▶ ▲ ▼ buttons to select an option you want, then press ENTER to view the option.

- Use the number buttons to select the track you want to view.
  Press RETURN to return to the menu screen.
- Menu setting and the exact operating procedures for using the menu may differ depending on the disc. Follow the instructions on the each menu screen. You also may set PBC to Off under setup. See page 18.

Notes

– If Parental Control is set and the disc is not within the Rating settings (not authorized), the 4-digit code must be entered and/or the disc must be authorized (see "Parental Control", on page 19).
– DVDs may have a regional code.
Your receiver will not play discs that have a regional code different from your receiver. The regional code for this receiver is 4 (four).

General Features

Note

Unless stated otherwise, all operations described use the remote control. Some features may also be available on the Setup menu.

Moving to another TITLE /GROUP

When a disc has more than one title/group, you can move to another title as follows:

- Press DISPLAY, then press the appropriate number button (0-9) to select a title/group number.

Moving to another CHAPTER/TRACK

When a title on a disc has more than one chapter or a disc has more than one track, you can move to another chapter/track as follows:

- Press SKIP/SCAN ⏮ or ⏭ briefly during playback to select the next chapter/track or to return to the beginning of the current chapter/track.
- Press ⏮ twice briefly to step back to the previous chapter/group/track.
- To go directly to any chapter during DVD playback, press DISPLAY. Then, press ▲/▼ to select the chapter/group/track icon. Then, enter the chapter/track number using the numbered buttons (0-9).

Note

For two-digit numbers, press the numbered buttons (0-9)in rapid succession.

Search

1 Press and hold SKIP/SCAN ⏮ or ⏭ for about two seconds during playback.
The receiver will now go into SEARCH mode.

2 Press and hold SKIP/SCAN ⏮ or ⏭ repeatedly to select the required speed: ◀◀X2, ◀◀X4, ◀◀X16, ◀◀X100 (backward) or ▶▶X2, ▶▶X4, ▶▶X16, ▶▶X100 (forward).
With a Video CD, the Search speed changes: ◀◀X2, ◀◀X4, ◀◀X8, (backward) or ▶▶X2, ▶▶X4, ▶▶X8, (forward).

3 To return to normal play, press PLAY.

Note

When using a DVD audio disc that includes pictures, this operation may be permitted in some picture segments.

Pause

1 Press PAUSE/STEP during playback.

2 To return to playback, press PLAY.

General Features (continued)

Still Picture and Frame-by-frame playback

1 Press PAUSE/STEP during playback.
The DVD/CD receiver will now go into PAUSE mode.
2 You can advance the picture frame-by-frame by pressing PAUSE/STEP repeatedly on the remote control.
3 To return to normal play, press PLAY.

Note
When using a DVD audio disc that includes pictures, this operation may be permitted in some picture segments.

Slow Motion

1 Press SLOW SCAN ◀◀ or ▶▶ during playback.
The player will enter SLOW mode.
2 Use the SLOW SCAN ◀◀ or ▶▶ to select the required speed: ◀I 1/16, ◀I 1/8, ◀I 1/4 or ◀I 1/2 (backward), or I▶ 1/16, I▶ 1/8, I▶ 1/4 or I▶ 1/2 (forward).
3 To exit slow motion mode, press PLAY.

Note
Slow motion playback in reverse is not applicable for Video CD.

Repeat A-B

To repeat a sequence in a title or group:

1 Press REPEAT A-B at your chosen starting point.
" A * " appears briefly on the TV screen.
2 Press REPEAT A-B again at your chosen end point.
"A B" appears briefly on the TV screen, and the repeat sequence begins ("A⊂⊃B" appears the display window).
3 To cancel the sequence, press REPEAT A-B.

Repeat

DVD Video Discs - Repeat Chapter/Title/Off

1 To repeat the currently playing chapter, press REPEAT.
The Repeat Chapter icon appears on the TV screen.
2 To repeat the title currently playing, press REPEAT a second time.
The Repeat Title icon appears on the TV screen.
3 To exit Repeat mode, press REPEAT a third time.
The Repeat Off icon appears on the TV screen.

DVD Audio Discs - Repeat Track/Group/Off

1 To repeat the currently playing track, press REPEAT.
The Repeat Track icon appears on the TV screen.
2 To repeat the group currently playing, press REPEAT a second time.
The Repeat Group icon appears on the TV screen.
3 To exit Repeat mode, press REPEAT a third time.
The Repeat Off icon appears on the TV screen.

Video CDs - Repeat Track/All/Off

1 To repeat the track currently playing, press REPEAT.
The Repeat Track icon appears on the TV screen.
2 To repeat the disc currently playing, press REPEAT a second time.
The Repeat All icon appears on the TV screen.
3 To exit Repeat mode, press REPEAT a third time.
The Repeat Off icon appears on the TV screen.

Note
On a Video CD with PBC, you must set PBC to Off on the setup menu to use the Repeat function. See page 18.

Time Search

The Time Search function allows you to start playing at any chosen time on the disc.

1 Press DISPLAY during playback. The on-screen display appears on the screen.
The Time Search box shows the elapsed playing time of the current disc.
2 Within 10 seconds, press ▲/▼ to select the Time Search icon in the on-screen display.
The "-:--:--" appears in the Time Search box.
3 Within 10 seconds, use the number buttons to enter the required start time. Enter hours, minutes, and seconds from left to right in the box.
If you enter the wrong numbers, press CLEAR to remove the numbers you entered. Then enter the correct numbers.
4 Within 10 seconds, press ENTER to confirm the start time.
Playback starts from the selected time on the disc. If you enter an invalid time, playback will continue from the current point.

General Features (continued)

3D Surround

This unit can produce a 3D Surround effect, which simulates multi-channel audio playback from two conventional stereo speakers, instead of the five or more speakers normally required to listen to multi-channel audio from a home theater system.

1 Press SOUND MODE to select "3D SUR" during playback.

2 To turn off the 3D Surround effect, press SOUND MODE again to select "BYPASS".

Zoom

The Zoom function allows you to enlarge the video image and to move through the enlarged image.

1 Press ZOOM during playback or still playback to activate the Zoom function.
If you press ZOOM repeatedly, the magnification level increases up to six steps.

2 Use the ◀ ▶▲▼ buttons to move through the zoomed picture.

3 Press CLEAR to resume normal playback or return to the paused image.

Note

- The zoom function may not work for some DVDs.

Marker Search

You can start playback from a memorized point. Up to nine points can be memorized.
To enter a mark, follow these steps.

1 During disc playback, press MARKER when playback reaches the spot that you want to memorize.
The Marker icon will appear on the TV screen briefly.

2 Repeat step 1 to enter up to nine Marker points on a disc.

To Recall a Marked Scene

1 During disc playback, press SEARCH.
The MARKER SEARCH menu will appear on the screen.

2 Within 10 seconds, press ◀/▶ to select a Marker number that you want to recall.

3 Press ENTER.
Playback will start from the Marked scene.

4 To remove the MARKER SEARCH menu, press SEARCH.

To clear a Marked Scene

1 During disc playback, press SEARCH.
The MARKER SEARCH menu will appear on the screen.

2 Press ◀/▶ to select the Marker number that you want to erase.

3 Press CLEAR.
The Marker number will be erased from the list.

4 Repeat steps 2 and 3 to erase additional Marker numbers.

5 To remove the MARKER SEARCH menu, press SEARCH.

Special DVD Features

Checking the contents of DVD Video discs: Menus

DVDs may offer menus that allow you to access special features. To use the disc menu, press MENU. Then, press the appropriate number button to select an option. Or, use the ◀ ▶▲▼ buttons to highlight your selection, then press ENTER.

Title Menu

1 Press TITLE.
If the current title has a menu, the menu will appear on the screen. Otherwise, the disc menu may appear.

2 The menu can list camera angles, spoken language and subtitle options, and chapters for the title.

3 To remove the title menu, press TITLE again.

Disc Menu

1 Press MENU.
The disc menu is displayed.

2 To remove the disc menu, press MENU again.

Camera Angle

If the disc contains scenes recorded at different camera angles, you can change to a different camera angle during playback.

- Press ANGLE repeatedly during playback to select a desired angle.
The number of the current angle appears on the display.

Changing the Audio Language

Press AUDIO repeatedly during playback to hear a different audio language or audio track.

Changing the Audio Channel

Press AUDIO repeatedly during playback to hear a different audio channel (STER., LEFT or RIGHT).

Subtitles

Press SUBTITLE repeatedly during playback to see the different subtitle languages.

Note

If ⊘ appears, the feature is not available on the disc.

DVD Audio Discs

DVD Audio is a new disc format building on the success of DVD to provide high quality, uncompressed, multi-channel audio for a new experience in audio quality. A DVD Audio disc can be identified by the DVD audio logo on the disc jacket or on the disc itself.

DVD Audio can provide higher quality stereo than Audio CDs with a sampling rate of up to 192kHz (compared to 44.1kHz for CDs). DVD Audio digital sound can be delivered with up to 24 bits of data (compared to 16 bits for a standard CD).

A typical DVD Audio disc contains up to seven times the data capacity of a CD. This additional space is used for music, either Advanced Resolution multi-channel sound quality that is closer to the artist's master recording or for longer recordings. Many DVD Audio discs contain on-screen text, such as artist biographies, playlists, or lyrics. Some DVD Audio discs contain photo galleries or video clips.

Note

If you use the DIGITAL OUT (OPTICAL) for your audio connection, the sound will only be similar to CD-quality sound even though you're playing a DVD Audio disc.

Moving to another GROUP

1/6

Some DVD Audio discs divide content into different groups. Your player enables you to quickly access different groups during playback via the on-screen display.

1 Press DISPLAY during playback on in stop mode.
2 Press ▲/▼ to select Group icon.
3 Press ◀/▶ or the numbered buttons (0-9) to select a group number.

Note

Sometimes the author of the disc creates hidden content that can only be accessed by entering a password. If the lock icon appears on the TV screen, enter the password (sometimes you'll find it on the disc's jacket cover or on a web site). This password control isn't dictated by your DVD/CD receiver — it is a function of the disc.
Since the authoring of DVD Audio Discs varies, some of the on-screen display choices might not be available for the disc you're playing.

Viewing another PAGE

1 /12

Since DVD Audio discs can hold a lot of content, there are various ways to see what's available on the disc.

1 Press DISPLAY during playback.
2 Press ▲/▼ to select Page icon.
3 Press ◀/▶ to select a page number.
What appears on the screen will vary from disc to disc because the information available depends upon the way the disc was created.

Note

Since the authoring of DVD Audio Discs varies, some of the on-screen display choices might not be available for the disc you're playing.

Audio and MP3/WMA Disc Operation

Playing an Audio CD and MP3/WMA Disc

The DVD/CD receiver can play MP3/WMA formatted recordings on CD-ROM, CD-R or CD-RW discs.
Before playing MP3/WMA recordings, read the notes on MP3/WMA Recordings on right.

1 **Insert a disc and close the tray.**
Audio CD; Audio CD menu appears on the TV screen go to step 4.
MP3/WMA disc; The MP3/WMA-JPEG choice menu appears on the TV screen. Go to step 2

2 **Press ▲/▼ to select the MP3/WMA then press ENTER.**
The MP3/WMA menu appears on the TV screen.
Press RETURN to move to the MP3/WMA-JPEG choice menu.

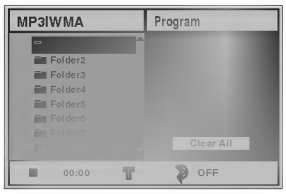

3 **Press ▲/▼ to select a folder, and ENTER.**
A list of files in the folder appears.

4 **Press ▲/▼ to select a track then press PLAY or ENTER.**
Playback starts.
During playback, the current track's elapsed playing time will appear on the display window and menu.
Playback will stop at the end of the disc.
Press TITLE to move to the next page.
Press MENU to move to the previous page.

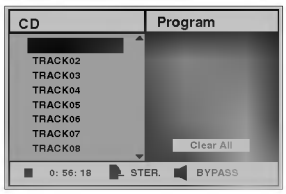

Audio CD menu

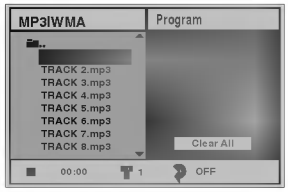

MP3/WMA menu

Tip
If you are in a file list and want to return to the Folder list, use the ▲/▼ to highlight ■.. and press ENTER to return to the previous menu screen.

5 **To stop playback at any other time, press STOP.**

Notes on MP3/WMA Recordings

About MP3

- An MP3 file is audio data compressed by using the MPEG1 audio layer-3 file-coding scheme. We call files that have the ".mp3" file extension "MP3 files".
- The player can not read an MP3 file that has a file extension other than ".mp3".

About WMA(Window Media Audio)

- An WMA file is a Microsoft audio compression technology.
- WMA(Windows Media Audio) offers double the audio compression of the MP3 format.

MP3/WMA Disc compatibility with this DVD/CD receiver is limited as follows:

1. Sampling Frequency / only at 44.1kHz (MP3), 32 - 44.1kHz (WMA)
2. Bit rate / within 32 - 320kbps (MP3), 32 - 128kbps (WMA)
3. CD-R physical format should be "ISO 9660"
4. If you record MP3/WMA files using the software which cannot create a FILE SYSTEM, for example "Direct-CD" etc., it is impossible to playback MP3/WMA files. We recommend that you use "Easy-CD Creator", which creates an ISO9660 file system.
5. A single session disc requires MP3/WMA files in the first track. If there is no MP3/WMA file in the 1st track, it cannot playback MP3/WMA files. If you wish to playback MP3/WMA files, format all the data in the disc or use a new one.
6. File names should be named using 8 letters or less and must incorporate ".mp3" or ".wma" extension e.g. "********.MP3" or "********.WMA".
7. Do not use special letters such as "/ : * ? " < > " etc.
8. Total number of files on the disc should be less than 650.

This DVD/CD receiver requires discs/recordings to meet
certain technical standards in order to achieve optimal playback quality. Pre-recorded DVDs are automatically set to these standards. There are many different types of recordable disc formats (including CD-R containing MP3 or WMA files). That require certain pre-existing conditions (see above) to insure compatible playback.

Customers should also note that permission is required in order to download MP3/WMA files and music from the Internet. Our company has no right to grant such permission. Permission should always be sought from the copyright owner.

Pause

1 Press PAUSE/STEP during playback.
2 To return to playback, press PLAY or press PAUSE/STEP again.

Moving to another Track

- Press SKIP/SCAN ⏮ or ⏭ briefly during playback to go to the next track or to return to the beginning of the current track.
- Press SKIP/SCAN ⏮ twice briefly to step back to the previous track.
- In case of audio CD, to go directly to any track, enter the track number using the numbered buttons (0-9) during playback.

Repeat Track/All/Off

1 To repeat the track currently playing, press REPEAT.
The Repeat icon and "TRACK" appears on the menu screen.
2 To repeat all tracks on a disc, press REPEAT a second time.
The Repeat icon and "ALL" appears on the menu screen.
3 To cancel Repeat mode, press REPEAT a third time.
The Repeat icon and "OFF" appears on the menu screen.

Search

1 Press and hold SKIP/SCAN ⏮ or ⏭ for about two seconds during playback.
The player will now go into SEARCH mode.
2 Press and hold SKIP/SCAN ⏮ or ⏭ repeatedly to select the required speed: ◀◀X2, ◀◀X4, ◀◀X8 (backward) or ▶▶X2, ▶▶X4, ▶▶X8 (forward).
Search speed and direction are indicated on the menu screen.
3 To exit SEARCH mode, press PLAY.

Repeat A-B

To repeat a sequence.
1 During disc playback, press REPEAT A-B at your chosen starting point.
The Repeat icon and "A * " appears on the menu screen.
2 Press REPEAT A-B again at your chosen end point.
The Repeat icon and "A B" appears on the menu screen, and the sequence begins to play repeatedly.
3 To exit the sequence and return to normal play, press REPEAT A-B again.
The Repeat icon and "OFF" appears on the menu screen.

3D Surround

This unit can produce a 3D Surround effect, which simulates multi-channel audio playback from two conventional stereo speakers, instead of the five or more speakers normally required to listen to multi-channel audio from a home theater system.
1 Press SOUND MODE to select "3D SUR" during playback.
2 To turn off the 3D Surround effect, press SOUND MODE again to select "BYPASS.".

Changing the Audio Channel

Press AUDIO repeatedly during playback to hear a different audio channel (STER., LEFT, or RIGHT).

JPEG Disc Operation

Viewing a JPEG disc

This DV/CD receiver can play discs with JPEG files and Kodak picture CD. Before playing JPEG recordings, read the notes on JPEG Recordings on right.

1 Insert a disc and close the tray.
The MP3/WMA-JPEG choice menu appears on the TV screen.

2 Press ▲/▼ to select the JPEG then press ENTER.
The JPEG menu appears on the TV screen.

3 Press ▲/▼ to select a folder, and ENTER.
A list of files in the folder appears.
Press RETURN to move to the MP3/WMA-JPEG choice menu.

Tip
If you are in a file list and want to return to the Folder list, use the ▲▼ buttons on the remote to highlight " ■.. " and press ENTER to return to the previous menu screen.

4 If you want to view a particular file, press ▲/▼ to highlight a file and press ENTER or PLAY.
Viewing the file proceeding starts.
During viewing a file, press RETURN to move to the previous menu (JPEG menu).
Press TITLE to move to the next page.
Press MENU to move to the previous page.

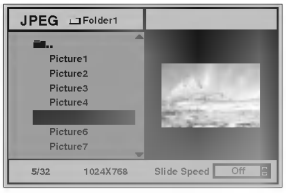

Tip
There are three viewing Slide Speed options: Fast, Normal, Slow, and Off. Press ◀/▶ to highlight the Slide Speed then press ▲/▼ to select the option you want to use, and press ENTER.

5 To stop viewing at any other time, press STOP.
The JPEG menu appears.

Moving to another File

Press SKIP/SCAN ⏮ or ⏭ once during viewing a picture to advance to the next file or to the previous file.

Still Picture

1 Press PAUSE/STEP during slide show.
The DV/CD receiver will now go into PAUSE mode.
2 To return to the slide show, press PLAY or press PAUSE/STEP again.

To flip the picture

Press ▲/▼ during showing a picture to flip the picture horizontally or a vertically.

To rotate picture

Press ◀/▶ during showing a picture to rotate the picture clockwise or counter clockwise.

Notes on JPEG Recordings

- Depending upon the size and number of the JPEG files, it could take a long time for the DVD/CD receiver to read the disc's contents. If you don't see an on-screen display after several minutes, some of the files are too big — reduce the resolution of the JPEG files to less than 2 mega pixels and burn another disc.
- Total number of files and folders on the disc should be less than 650.
- Some disc may be incompatible due to different recording format or condition of disc.
- When you are using software such as "Easy CD Creator" to burn the jpeg files into the CD-R, ensure that all the selected files have the ".jpg" extensions when copying into the CD layout.
- If the files have ".jpe" or ".jpeg" extensions, please rename them as ".jpg" files.
- File names without ".jpg" extension will not be able to be read by this DVD/CD receiver. Even though the files are shown as JPEG image files in windows explorer.

Programmed Playback with Audio CD and MP3/WMA Disc

The Program function enables you to store your favorite tracks from any disc in the player memory.

Program can contain 30 tracks.

1 Press PROGRAM during playback or in the stop mode to enter the Program Edit mode.

The E mark will appear to the right of the word Program on the right side of the menu screen.

Note

Press PROGRAM to exit the Program Edit mode; the E mark will disappear.

2 Select a track, then press ENTER to place the selected track on the Program list.

3 Repeat step 2 to place additional tracks on the Program list.

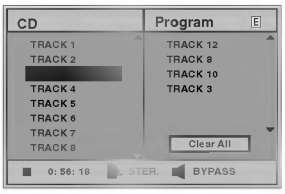

Audio CD menu

MP3/WMA menu

4 Press ▶.

The programmed track you selected last is highlighted on the program list.

5 Press ▲/▼ to select the track you want to start playing.

Press TITLE to move to the next page.
Press MENU to move to the previous page.

6 Press PLAY to start.

Playback begins in the order in which you programmed the tracks and "PROG." appears on the menu screen. Playback stops after all of the tracks on the Program list have played once.

7 To resume normal playback from programmed playback, select a track of CD (or MP3/WMA) list and then press ENTER.

"PROG." indicator disappears on the menu screen.

Programmed Playback with Video CD

Note

On a Video CD with PBC, you must set PBC to Off on the setup menu to use the Program function. See page 18.

Program can contain 30 tracks.

1 Insert Video CD and close the tray.

2 Press PROGRAM while playback is stopped.

The VCD Program menu will appear.

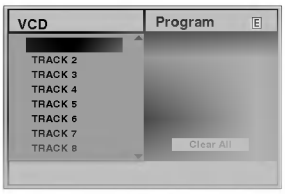

Note

Press RETURN or PROGRAM to exit the Program menu.

3 Follow steps 2-6 of "Programmed Playback with Audio CD and MP3/WMA disc" on left.

4 To resume normal playback from programmed playback, press PROGRAM.

"PROG." indicator disappears in the display window.

Repeat Programmed Tracks

- To repeat the track currently playing, press REPEAT.
  The Repeat icon and "TRACK" appears on the menu screen.
- To repeat all tracks on the program list, press REPEAT a second time.
  The Repeat icon and "ALL" appears on the menu screen.
- To cancel Repeat mode, press REPEAT a third time.
  The Repeat icon and "OFF" appears on the menu screen.

Erasing a Track from Program List

1 Press PROGRAM during playback (Audio CD and MP3/WMA disc only) or in the stop mode to enter the Program Edit mode.
  The E mark will appear.
2 Press ▶ to move to the Program list.
3 Use ▲/▼ to select the track that you wish to erase from the Program list.
4 Press CLEAR.
  The track will be erased from the Program list.

Erasing the Complete Program List

1 Follow steps 1-2 of "Erasing a Track from Program List" as above.
2 Use ▲/▼ to select "Clear All", then press ENTER.
  The complete Program for the disc will be erased.
  The programs are also cleared when the disc is removed.

Speaker Setup

Adjust the following settings for the built-in 5.1 channel surround decoder.

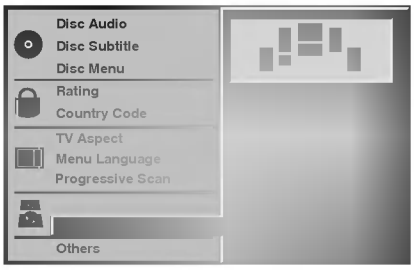

1 **Select "5.1 Speaker Setup" using the ▲/▼ buttons on the setup menu.**

2 **While "5.1 Speaker Setup" is selected, press ▶ button.**

3 **Press ▶ buttons to select the desired speaker.**

4 **Adjust options by using ▲▼◀ ▶ buttons.**

Speaker selection

Select a speaker that you want to adjust. ((Front speakers (Left), Front speakers (Right), Centre Speaker, Rear speakers (Left), Rear speakers (Right), or Subwoofer))

Note

Certain speaker settings are prohibited by the Dolby Digital licensing agreement.

Volume

Press ◀ / ▶ to adjust the output level of the selected speaker. (-6dB ~ +6dB)

Size

Since the speaker settings are fixed, you cannot change the settings.

Distance

If you connected speakers to your DVD/CD receiver , setting the Distance lets the speakers know how far the sound has to travel to reach your set listening point. This allows the sound from each speaker to reach the listener at the same time. (1 ft = 30.48 cm)

Note

You can not set the distance of subwoofer speaker.

Test

Press ENTER to test the signals of each speaker. Adjust the volume to match the volume of test signals memorized in the system.

- Front Left (L) → Front Right (R) → Centre → Rear Left (L) → Rear Right (R) → Subwoofer

Return

Press ENTER to return to the previous menu.

Additional Information

Last Condition Memory

This DVD/CD receiver memorizes the user settings for the last disc that you have viewed. Settings remain in memory even if you remove the disc from the player or switch off the player. If you load a disc that has its settings memorized, the latest stop position is automatically recalled.

Notes

– Settings are stored in memory for use any time.
– This DV/CD receiver does not memorize settings of a disc if you switch off the DVD/CD receiver before commencing to play it.

System Select

You must select the appropriate system mode for your TV system. If NO DISC appears in the display window, press and hold PAUSE/STEP on the front panel or remote control for more than 5 seconds to be able to select a system (PAL, NTSC, or AUTO).

- When the selected system does not coincide with the system of your TV, normal colour picture may not be displayed.

AUTO: Select when DVD/CD receiver is connected with Multi system TV.

NTSC: Select when DVD/CD receiver is connected with NTSC-TV.

PAL: Select when DVD/CD receiver is connected with PAL-TV.

Presetting the radio stations

You can preset 30 stations for FM and AM (MW). Before tuning, make sure that you have turned down the volume.

1 Press BAND on the remote control until FM or AM (MW) appears in the display window.

2 And then every time you press BAND, FM and AM (MW) changes alternately.

3 Press and hold TUNING ⏮ ◀◀ or ▶▶ ⏭ on the front panel for about two seconds until the frequency indication starts to change, then release.
Scanning stops when the DVD/CD Receiver tunes in a station. "TUNED" and "STEREO" (for stereo program) appear in the display window.

Note
"TUNED" only appears when the signal is FM and STEREO.

4 Press MEMORY on the front panel.
A preset number will flash in the display window.

5 Press TUNING ⏮ ◀◀ or ▶▶ ⏭ on the front panel to select the preset number you want.

6 Press MEMORY on the front panel again.
The station is stored.

7 Repeat steps 3 to 6 to store other stations.

To tune in a station with a weak signal

Press TUNING ⏮ ◀◀ or ▶▶ ⏭ repeatedly in step 3 to tune in the station manually.

To clear all the stored stations

Press and hold MEMORY for about two seconds and "CLEAR ALL" is appeared in the display window and then press MEMORY again, the stations are cleared.

- If you have accidentally entered into the "CLEAR ALL" mode and you do not wish to clear the memory, do not press any key. After a few seconds, the "CLEAR ALL" display will go off by itself and change to normal mode.

Note
If all stations have already been entered, the FULL message will appear in the display window for a moment and then a preset number will flash.
To change the preset number, follow the steps 5-6 as above.

Listening to the radio

Preset radio stations in the DVD/CD receiver's memory first (see "Presetting radio stations" on the left).

1 Press BAND until AM (MW) or FM appears in the display window.
The last received station is tuned in.

2 Press PRESET +/- repeatedly to select the preset station you want.
Each time you press the button, the DVD receiver tunes in one preset station at a time.

3 Adjust the volume by rotating VOLUME on the front panel or by pressing VOLUME + or - on the remote control repeatedly.

To turn off the radio

Press POWER to turn the DVD/CD receiver off or select another function mode (CD/DVD, VIDEO1 or VIDEO2).

To listen to non-preset radio stations

- Use manual or automatic tuning in step 2.
- For manual tuning, press TUNING ⏮ ◀◀ or ▶▶ ⏭ on the front panel repeatedly.
- For automatic tuning, press and hold TUNING ⏮ ◀◀ or ▶▶ ⏭ for about two seconds on the front panel.

To select a preset radio station directly

You can use the number buttons on the remote control to select a preset radio station directly.
For example, to listen to preset station 4, press 4 on the remote control. To listen to preset station 19, press 1 then 9 (within 3 seconds).

For your reference

- **If an FM program is noisy**
  Press MONO/STEREO on the front panel so that "STEREO" disappears in the display window. There will be no stereo effect, but the reception will improve. Press the button again to restore the stereo effect.
- **To improve reception**
  Reorient the supplied antennas.

Other Function

Sleep Timer Setting

You can set the DVD/CD receiver to turn off automatically at a specified time.

1 **Press SLEEP to set the desired sleep time.**
The SLEEP indicator and sleep time appears in the display window.

2 **Each time you press SLEEP the setting changes in the following order.**
SLEEP 90 →80 → 70 → 60→ 50 → 40 → 30 → 20 →10 → OFF

Note

- **You can check the time remaining before the DVD/CD receiver turns off.**
  Press SLEEP. The remaining time appears in the display window.

Dimmer

This function will change the brightness of the display window on the front panel during in power-on status.

Press the DIMMER repeatedly.

Mute

Press MUTE to mute your unit.

You can mute your unit in order, for example, to answer the telephone, "MUTE" indicator flashes in the display window.

Using Headphone Jack

Connect a stereo headphone plug (ϕ3.5mm) into the **PHONES connector**.

The speakers are automatically disconnected when you plug in a headphone (not supplied).

Selecting input source

You can use VCRs or other units connected to the VIDEO1, VIDEO2 connectors or Optical connector. Refer to the owner's manual supplied with the unit for further information on the operation.

Press AUX repeatedly on the remote control to select the desired input source.

Each time you press this button, the mode of the function changes in the following sequence:

- **VIDEO 1:** for selecting the analog signal from VIDEO1 AUDIO IN (L/R) & VIDEO IN Connectors.
- **VIDEO 1 OPT:** for selecting the digital signal from VIDEO 1 OPTICAL IN Connector.
- **VIDEO 2:** for selecting the analog signal from VIDEO2 AUDIO IN (L/R) & VIDEO IN Connectors.
- **VIDEO2 OPT:** for selecting the digital signal from VIDEO 2 OPTICAL IN Connector.

Notes

- The Optical input function is available only when the other unit's Sampling Frequency is 32 ~ 96kHz.
- You can also select the input source by pressing PLAY/FUNCTION button on the front panel.
  Press and hold down this button about 3 seconds, then press repeatedly to select input source.

Language Code List

Enter the appropriate code number for the initial settings “Disc Audio”, “Disc Subtitle” and/or “Disc Menu” (See page 17).

Code	Language	Code	Language	Code	Language	Code	Language
6566	Abkhazian	7074	Fiji	7678	Lingala	8373	Singhalese
6565	Afar	7073	Finnish	7684	Lithuanian	8375	Slovak
6570	Afrikaans	7082	French	7775	Macedonian	8376	Slovenian
8381	Albanian	7089	Frisian	7771	Malagasy	8379	Somali
6577	Ameharic	7176	Galician	7783	Malay	6983	Spanish
6582	Arabic	7565	Georgian	7776	Malayalam	8385	Sudanese
7289	Armenian	6869	German	7784	Maltese	8387	Swahili
6583	Assamese	6976	Greek	7773	Maori	8386	Swedish
6588	Aymara	7576	Greenlandic	7782	Marathi	8476	Tagalog
6590	Azerbaijani	7178	Guarani	7779	Moldavian	8471	Tajik
6665	Bashkir	7185	Gujarati	7778	Mongolian	8465	Tamil
6985	Basque	7265	Hausa	7865	Nauru	8484	Tatar
6678	Bengali; Bangla	7387	Hebrew	7869	Nepali	8469	Telugu
6890	Bhutani	7273	Hindi	7879	Norwegian	8472	Thai
6672	Bihari	7285	Hungarian	7982	Oriya	6679	Tibetan
6682	Breton	7383	Icelandic	8065	Panjabi	8473	Tigrinya
6671	Bulgarian	7378	Indonesian	8083	Pashto, Pushto	8479	Tonga
7789	Burmese	7365	Interlingua	7065	Persian	8482	Turkish
6669	Byelorussian	7165	Irish	8076	Polish	8475	Turkmen
7577	Cambodian	7384	Italian	8084	Portuguese	8487	Twi
6765	Catalan	7465	Japanese	8185	Quechua	8575	Ukrainian
9072	Chinese	7487	Javanese	8277	Rhaeto-Romance	8582	Urdu
6779	Corsican	7578	Kannada	8279	Rumanian	8590	Uzbek
7282	Croatian	7583	Kashmiri	8285	Russian	8673	Vietnamese
6783	Czech	7575	Kazakh	8377	Samoan	8679	Volapük
6865	Danish	7589	Kirghiz	8365	Sanskrit	6789	Welsh
7876	Dutch	7579	Korean	7168	Scots Gaelic	8779	Wolof
6978	English	7585	Kurdish	8382	Serbian	8872	Xhosa
6979	Esperanto	7679	Laothian	8372	Serbo-Croatian	7473	Yiddish
6984	Estonian	7665	Latin	8378	Shona	8979	Yoruba
7079	Faroese	7686	Latvian, Lettish	8368	Sindhi	9085	Zulu

Country Code List

Enter the appropriate code number for the initial setting “Country Code” (See page 19).

Code	Country
AD	Andorra
AE	United Arab Emirates
AF	Afghanistan
AG	Antigua and Barbuda
AI	Anguilla
AL	Albania
AM	Armenia
AN	Netherlands Antilles
AO	Angola
AQ	Antarctica
AR	Argentina
AS	American Samoa
AT	Austria
AU	Australia
AW	Aruba
AZ	Azerbaidjan
BA	Bosnia-Herzegovina
BB	Barbados
BD	Bangladesh
BE	Belgium
BF	Burkina Faso
BG	Bulgaria
BH	Bahrain
BI	Burundi
BJ	Benin
BM	Bermuda
BN	Brunei Darussalam
BO	Bolivia
BR	Brazil
BS	Bahamas
BT	Bhutan
BV	Bouvet Island
BW	Botswana
BY	Belarus
BZ	Belize
CA	Canada
CC	Cocos (Keeling) Islands
CF	Central African Republic
CG	Congo
CH	Switzerland
CI	Ivory Coast
CK	Cook Islands
CL	Chile
CM	Cameroon
CN	China
CO	Colombia
CR	Costa Rica
CS	Former Czechoslovakia
CU	Cuba
CV	Cape Verde
CX	Christmas Island
CY	Cyprus
CZ	Czech Republic
DE	Germany
DJ	Djibouti
DK	Denmark
DM	Dominica
DO	Dominican Republic
DZ	Algeria
EC	Ecuador
EE	Estonia
EG	Egypt
EH	Western Sahara

Code	Country
ER	Eritrea
ES	Spain
ET	Ethiopia
FI	Finland
FJ	Fiji
FK	Falkland Islands
FM	Micronesia
FO	Faroe Islands
FR	France
FX	France (European Territory)
GA	Gabon
GB	Great Britain
GD	Grenada
GE	Georgia
GF	French Guyana
GH	Ghana
GI	Gibraltar
GL	Greenland
GM	Gambia
GN	Guinea
GP	Guadeloupe (French)
GQ	Equatorial Guinea
GR	Greece
GS	S. Georgia & S. Sandwich Isls.
GT	Guatemala
GU	Guam (USA)
GW	Guinea Bissau
GY	Guyana
HK	Hong Kong
HM	Heard and McDonald Islands
HN	Honduras
HR	Croatia
HT	Haiti
HU	Hungary
ID	Indonesia
IE	Ireland
IL	Israel
IN	India
IO	British Indian Ocean Territory
IQ	Iraq
IR	Iran
IS	Iceland
IT	Italy
JM	Jamaica
JO	Jordan
JP	Japan
KE	Kenya
KG	Kyrgyzstan
KH	Cambodia6
KI	Kiribati
KM	Comoros
KN	Saint Kitts & Nevis Anguilla
KP	North Korea
KR	South Korea
KW	Kuwait
KY	Cayman Islands
KZ	Kazakhstan
LA	Laos
LB	Lebanon

Code	Country
LC	Saint Lucia
LI	Liechtenstein
LK	Sri Lanka
LR	Liberia
LS	Lesotho
LT	Lithuania
LU	Luxembourg
LV	Latvia
LY	Libya
MA	Morocco
MC	Monaco
MD	Moldavia
MG	Madagascar
MH	Marshall Islands
MK	Macedonia
ML	Mali
MM	Myanmar
MN	Mongolia
MO	Macau
MP	Northern Mariana Islands
MQ	Martinique (French)
MR	Mauritania
MS	Montserrat
MT	Malta
MU	Mauritius
MV	Maldives
MW	Malawi
MX	Mexico
MY	Malaysia
MZ	Mozambique
NA	Namibia
NC	New Caledonia (French)
NE	Niger
NF	Norfolk Island
NG	Nigeria
NI	Nicaragua
NL	Netherlands
NO	Norway
NP	Nepal
NR	Nauru
NU	Niue
NZ	New Zealand
OM	Oman
PA	Panama
PE	Peru
PF	Polynesia (French)
PG	Papua New Guinea
PH	Philippines
PK	Pakistan
PL	Poland
PM	Saint Pierre and Miquelon
PN	Pitcairn Island
PR	Puerto Rico
PT	Portugal
PW	Palau
PY	Paraguay
QA	Qatar
RE	Reunion (French)
RO	Romania
RU	Russian Federation
RW	Rwanda
SA	Saudi Arabia
SB	Solomon Islands

Code	Country
SC	Seychelles
SD	Sudan
SE	Sweden
SG	Singapore
SH	Saint Helena
SI	Slovenia
SJ	Svalbard and Jan Mayen Islands
SK	Slovak Republic
SL	Sierra Leone
SM	San Marino
SN	Senegal
SO	Somalia
SR	Suriname
ST	Saint Tome and Principe
SU	Former USSR
SV	El Salvador
SY	Syria
SZ	Swaziland
TC	Turks and Caicos Islands
TD	Chad
TF	French Southern Territories
TG	Togo
TH	Thailand
TJ	Tadjikistan
TK	Tokelau
TM	Turkmenistan
TN	Tunisia
TO	Tonga
TP	East Timor
TR	Turkey
TT	Trinidad and Tobago
TV	Tuvalu
TW	Taiwan
TZ	Tanzania
UA	Ukraine
UG	Uganda
UK	United Kingdom
UM	USA Minor Outlying Islands
US	United States
UY	Uruguay
UZ	Uzbekistan
VA	Vatican City State
VC	Saint Vincent & Grenadines
VE	Venezuela
VG	Virgin Islands (British)
VI	Virgin Islands (USA)
VN	Vietnam
VU	Vanuatu
WF	Wallis and Futuna Islands
WS	Samoa
YE	Yemen
YT	Mayotte
YU	Yugoslavia
ZA	South Africa
ZM	Zambia
ZR	Zaire
ZW	Zimbabwe

Troubleshooting

Check the following guide for the possible cause of a problem before contacting service.

Symptom	Cause	Correction
No power.	• The power cord is disconnected.	• Plug the power cord securely into the wall outlet.
The power is on, but the DVD/CD receiver does not work.	• No disc is inserted.	• Insert a disc. (Check that the DVD or, audio CD indicator in the DVD display is lit.)
No picture.	• The TV is not set to receive DVD signal output.	• Select the appropriate video input mode on the TV so the picture from the DVD/ CD receiver appears on the TV screen.
	• The video cable is not connected securely.	• Connect the video cable into the jacks securely.
	• The connected TV power is turned off.	• Turn on the TV.
There is no sound or only a very low-level sound is heard.	• The equipment connected with the audio cable is not set to receive DVD signal output.	• Select the correct input mode of the audio receiver so you can hear the sound from the DVD/CD receiver.
	• The audio cables are not connected securely.	• Connect the audio cable into the jacks securely.
	• The power of the equipment connected with the audio cable is turned off.	• Turn on the equipment connected with the audio cable.
	• The audio connecting cable is damaged.	• Replace it with new one.
The playback picture is poor.	• The disc is dirty.	• Clean the disc.
The DVD/CD receiver does not start playback.	• No disc is inserted.	• Insert a disc. (Check that the DVD, or audio CD indicator in the DVD display is lit.)
	• An unplayable disc is inserted.	• Insert a playable disc. (Check the disc type, colour system and Regional code.)
	• The disc is placed upside down.	• Place the disc with the playback side down.
	• The disc is not placed within the guide.	• Place the disc on the disc tray correctly inside the guide.
	• The disc is dirty.	• Clean the disc.
	• A menu is on the TV screen.	• Press the SETUP button to turn off the menu screen.
	• The Rating level is set.	• Cancel the Rating function or change the rating level.
Loud hum or noise is heard.	• The plugs and jacks are dirty.	• Wipe them with a cloth slightly moistened with alcohol.
	• The disc is dirty.	• Clean the disc.
	• The speakers and components are connected poorly.	• Connect the speakers and components securely.
	• The DVD/CD receiver is located too close to the TV.	• Move your TV away from the audio components.

Troubleshooting (Cont'd)

Symptom	Cause	Correction
Radio stations cannot be tuned in.	• The antenna is positioned or connected poorly.	• Connect the antenna securely. • Adjust the antennas and connect an external antenna if necessary.
	• The signal strength of the stations is too weak (when tuning in with automatic tuning).	• Tune in the station manually.
	• No stations have been preset or preset stations have been cleared (when tuning by scanning preset stations).	• Preset the stations (page 29).
The remote control does not work properly.	• The remote control is not pointed at the remote sensor of the DVD/CD receiver.	• Point the remote control at the remote sensor of the DVD/CD receiver.
	• The remote control is too far from the DVD/CD receiver.	• Use the remote control within about 23 ft (7 m).
	• There is an obstacle in the path of the remote control and the DVD/CD receiver.	• Remove the obstacle.
	• The batteries in the remote control are flat.	• Replace the batteries with new ones.
The sound mode or Pro Logic II mode cannot be changed.	• The system cannot change while playing a MP3 or WMA disc.	• Insert such a CD disc.
The front panel display is too dim.	• Nothing is displayed on the front panel display.	• Press DIMMER on the remote control.

Specification

[General]	Power supply	Refer to main label (labeled at the bottom cover)
	Power consumption	Refer to main label (labeled at the bottom cover)
	Mass	5.9 kg
	External dimensions (W x H x D)	360 x 82 x 344 mm
	Operating conditions	Temperature: 5°C to 35°C, Operation status: Horizontal
	Operating humidity	5% to 85%
[CD/DVD]	Laser	Semiconductor laser, wavelength 650 nm
	Signal system	PAL 625/50, NTSC 525/60
	Frequency response (audio)	150 Hz to 18 kHz
	Signal-to-noise ratio (audio)	More than 70 dB (1 kHz, NOP, 20 kHz LPF/A-Filter)
	Dynamic range (audio)	More than 70 dB
	Harmonic distortion (audio)	0.5 % (1 kHz, at 12W position) (20 kHz LPF/A-Filter)
[Video]	Video input	1.0 V (p-p), 75 Ω, negative sync., RCA jack x 2
	Video output	1.0 V (p-p), 75 Ω, negative sync., RCA jack x 1
	S-video output	(Y) 1.0 V (p-p), 75 Ω, negative sync., Mini DIN 4-pin x 1 (C) 0.3 V (p-p), 75 Ω
	Component Video output	(Y) 1.0 V (p-p), 75 Ω, negative sync., RCA jack x 1 (Pb)/(Pr) 0.7 V (p-p), 75 Ω, RCA jack x 1
[Tuer] [FM]	Tuning Range	87.5 - 108.0 MHz or 65.0 - 74.0 MHz, 87.5 - 108.0 MHz
	Intermediate Frequency	10.7 MHz
	Signal-to Noise Ratio	60 dB (Mono)
	Frequency Response	150 - 8,000 Hz
[Tuer] AM [MW]	Tuning Range	522 - 1,611 kHz or 530 - 1,610 kHz
	Intermediate Frequency	450 kHz
[Amplifier]	Stereo mode	50W + 50W (8Ω at 1 kHz, THD 10 %)
	Surround mode **(* Depending on the sound mode settings and the source, there may be no sound output.)**	Front: 50W + 50W (THD 10 %) Centre*: 50W Surround*: 50W + 50W (8Ω at 1 kHz, THD 10 %) Subwoofer*: 100W (4Ω at 30 Hz, THD 10 %)
	Inputs	VIDEO 1, VIDEO 2, OPTICAL AUDIO
	Outputs	VIDEO 1 (AUDIO OUT) : 2 V PHONES: (32 Ω, 0.8 V) OPTICAL AUDIO

[Speakers]	Front Speaker (LHS-D6530V)	Surround Speaker (LHS-D6530T)	Centre speaker (LHS-D6530C)	Passive Subwoofer (LHS-D6530W)
Type	2 Way 2 Speaker	2 Way 2 Speaker	2 Way 2 Speaker	1 Way 1 Speaker
Impedance	8 Ω	8 Ω	8 Ω	4 Ω
Frequency Response	110 - 40,000 Hz	110 - 40,000 Hz	110 - 40,000 Hz	40 - 1,500 Hz
Sound Pressure Level	83 dB/W (1m)	83 dB/W (1m)	83 dB/W (1m)	82 dB/W (1m)
Rated Input Power	50W	50 W	50 W	100 W
Max. Input Power	100 W	100 W	100 W	200 W
Net Dimensions (W x H x D)	120 x 255 x 97 mm	120 x 175 x 93 mm	250 x 120 x 96.7 mm	209 x 417 x 385 mm
Net Weight	1.0 kg	0.8kg	1.0kg	6.5kg

[Supplied Accessories]

- Audio cable 1
- Speakers 6
- Remote control 1
- AM loop antenna 1
- Video cable 1
- Speaker cables 5
- Batteries (AAA) 2
- FM antenna 1

✻ Designs and specifications are subject to change without notice.

P/N: 3828R-D031F