English

العربية

השפה העברית

User Guide

FB164 (FB164-A0M, FBS164V)

iPod is a trademark of Apple Computer, Inc, registered in the U.S. and other countries.

P/NO : MFL62755739

Safety Precaution

CAUTION

RISK OF ELECTRIC SHOCK
DO NOT OPEN

CAUTION : TO REDUCE THE RISK OF ELECTRIC SHOCK DO NOT REMOVE COVER (OR BACK) NO USER-SERVICEABLE PARTS INSIDE REFER SERVICING TO QUALIFIED SERVICE PERSONNEL.

This lightning flash with arrowhead symbol within an equilateral triangle is intended to alert the user to the presence of uninsulated dangerous voltage within the product's enclosure that may be of sufficient magnitude to constitute a risk of electric shock to persons.

The exclamation point within an equilateral triangle is intended to alert the user to the presence of important operating and maintenance (servicing) instructions in the literature accompanying the product.

WARNING : TO PREVENT FIRE OR ELECTRIC SHOCK HAZARD, DO NOT EXPOSE THIS PRODUCT TO RAIN OR MOISTURE.

WARNING : Do not install this equipment in a confined space such as a book case or similar unit.

CAUTION : This product employs a Laser System.
To ensure proper use of this product, please read this owner's manual carefully and retain it for future reference. Shall the unit require maintenance, contact an authorized service center.
Use of controls, adjustments or the performance of procedures other than those specified herein may result in hazardous radiation exposure.
To prevent direct exposure to laser beam, do not try to open the enclosure. Visible laser radiation when open. DO NOT STARE INTO BEAM.

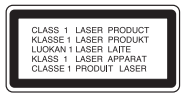

CAUTION : The apparatus shall not be exposed to water (dripping or splashing) and no objects filled with liquids, such as vases, shall be placed on the apparatus.

CAUTION concerning the Power Cord

Most appliances recommend they be placed upon a dedicated circuit ;

That is, a single outlet circuit which powers only that appliance and has no additional outlets or branch circuits. Check the specification page of this owner's manual to be certain.

Do not overload wall outlets. Overloaded wall outlets, loose or damaged wall outlets, extension cords, frayed power cords, or damaged or cracked wire insulation are dangerous. Any of these conditions could result in electric shock or fire. Periodically examine the cord of your appliance, and if its appearance indicates damage or deterioration, unplug it, discontinue use of the appliance, and have the cord replaced with an exact replacement part by an authorized service center.

Protect the power cord from physical or mechanical abuse, such as being twisted, kinked, pinched, closed in a door, or walked upon. Pay particular attention to plugs, wall outlets, and the point where the cord exits the appliance.

To disconnect power from the mains, pull out the mains cord plug. When installing the product, ensure that the plug is easily accessible.

This device is equipped with a portable battery or accumulator.
Safe way to remove the battery or the battery from the equipment:
Remove the old battery or battery pack, follow the steps in reverse order than the assembly. To prevent contamination of the environment and bring on possible threat to human and animal health, the old battery or the battery put it in the appropriate container at designated collection points. Do not dispose of batteries or battery together with other waste. It is recommended that you use local, free reimbursement systems batteries and accumulators.
The battery shall not be exposed to excessive heat such as sunshine, fire or the like.

Welcome to your New DVD MICRO Hi-Fi SYSTEM

Contents

Setting up	4
Main Unit	5
Remote control	6
OSD initial language settings - Optional	7
Initial setting of the Area Code - Optional	7
Adjusting the general settings	8-9
Setting the Clock	10
TV sound EZ setup	10
Displaying disc information	11
Playing a Disc or file	11-13
Listening to the radio	14
Using a Bluetooth wireless technology	14-15
Listening to music from your portable player	16
Using an USB device	16
Recording to USB	17
Playing the iPod	18
Language Codes	19
Area Codes	19
Troubleshooting	20
Types of Playable Discs	21
Specifications	22

Precautions in using the touch buttons

- Use the touch buttons with clean and dry hands.
  - In a humid environment, wipe out any moisture on the touch buttons before using.
- Do not press the touch buttons hard to make it work.
  - If you apply too much strength, it can damage the sensor of the touch buttons.
- Touch the button that you want to work in order to operate the function correctly.
- Be careful not to have any conductive material such as metallic object on the touch buttons, and it can cause malfunctions.

Setting up

Connecting your unit to your TV and aerials.

1 Connect jacks on the unit and your TV (DVD player or Digital Device etc.) using the cables.
Check the jacks of your TV and choose the A, B connection. Picture quality improves in order from A to B.

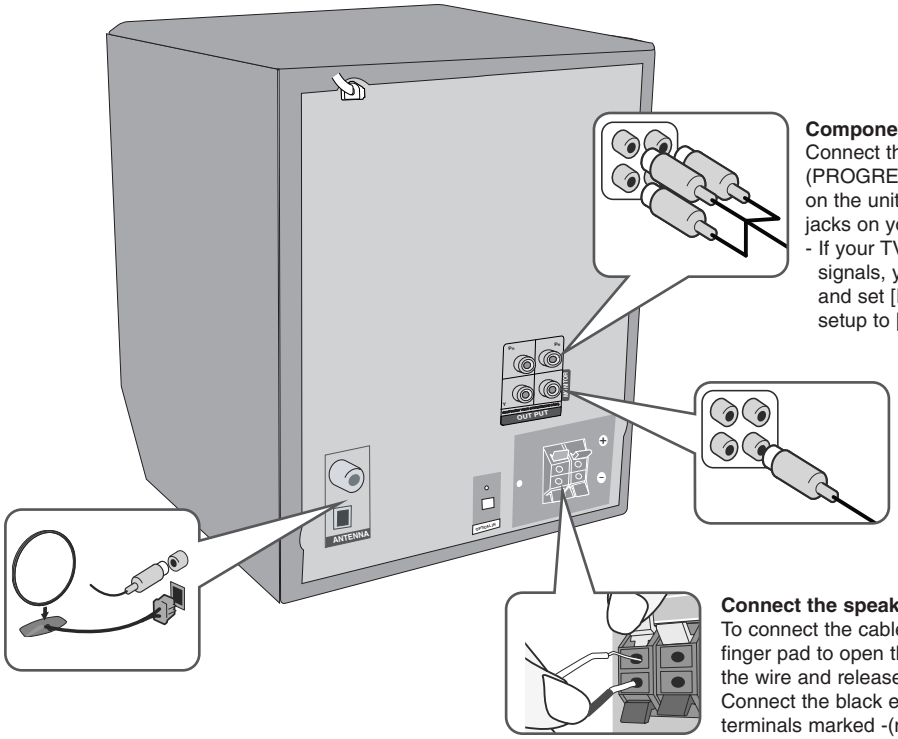

Component Video connection (B)
Connect the COMPONENT VIDEO (PROGRESSIVE SCAN) OUTPUT jacks on the unit to the corresponding input jacks on your TV using a Y PB PR cable.
- If your TV accepts progressive format signals, you must use this connection and set [Progressive Scan] in [Display] setup to [On] (See page 8).

Video Out connection (A)
Connect the VIDEO OUTPUT(MONITOR) jack on the unit to the corresponding input jack on your TV using a Video cable.

Stretch the FM aerial.
The reception will be at its best when the end of the aerial is stretched to be in a straight line and horizontal.

Fit the AM loop aerial to its stand
Connect the AM loop aerial to the unit.

Connect the speaker cables to the player
To connect the cable to the unit, press each plastic finger pad to open the connection terminal. Insert the wire and release the finger pad.
Connect the black end of each wire to the terminals marked -(minus) and the other end to the terminals marked + (plus).

2 Plug the unit plug into a wall socket.

Main Unit

TOP

FUNC.
(Function) Selects the function.

⏻/I (Power)
Turn the unit on and off.

Disc Slot
- Do not force a disc into the CD slot.
- Do not pull or push a disc while a disc is ejected.
- Press ⏏ again to reinsert the disc after ejecting it.
- **Insert the disc into the CD slot with the label side toward the front of the unit.**

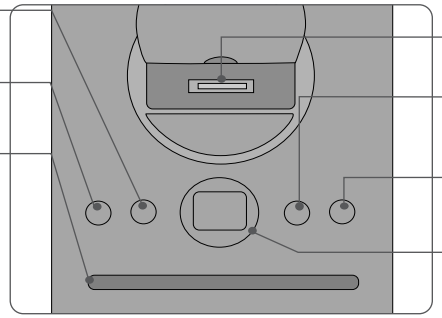

iPod Dock

USB REC.
Recording to USB.

⏏
Ejects or insert the disc from slot loader.

USB Port

FRONT

EQ/ DEMO
You can choose fixed sound impression.
Press **DEMO** in power off state to demonstrate the function on display window.

CLOCK
(See “Setting the Clock”)

TIMER
(See the “Using your player as an alarm clock”)

SET
Confirms the settings.

PORTABLE IN
For connecting a portable device and listening to sound from it through this system’s speakers.

PHONES
Headphone jack

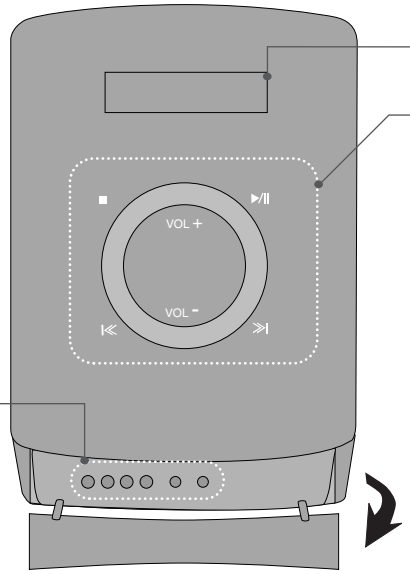

Display Window

■ STOP
Stop
I<< / >>I
Scanning/ Tuning/ Searching
▶/II
Play/ Pause
VOL +/-
Volume control

Remote control

RETURN (↶) : Moving backwards in the menu or exiting the setup menu.

REC (●) : USB Direct Recording.

STOP (■) : Stops playback or recording.

PLAY (▶), MO./ST. : Starts playback. Selects Mono/ Stereo.

PAUSE/STEP (❚❚) : Pause playback.

SKIP (I◀◀ / ▶▶I) : Go to next or previous chapter/ track/ file.

SCAN (◀◀/▶▶) : Search backward or forward.

TV Control buttons : Controls the TV. (LG TV only)

Controlling the TV

You can control the sound level, input source, and power switching of LG TVs as well. Hold POWER (TV) and press **PR/CH** (+/–) button repeatedly until the TV turns on or off.

PROG./MEMO. : Accesses or removes Program menu.
CLEAR : Removes a track number on the Program List.

Put the battery into the remote control

Make sure that the + (plus) and - (minus) on the battery match those on the remote control.

FUNCTION : Selects the function and input source.

SLEEP : You can select delay time between 10 and 180 minutes, after which the player will turn off. To check the remaining time, press **SLEEP**. (Dimmer : Press **SLEEP** once. Dims the LED (Light-emitting diode) of front panel by half in power-on status.)

⏻ **POWER :** Switches the unit ON or OFF.

⏏ **OPEN/CLOSE :** Opens and closes the disc Drawer.

TITLE : If the current DVD title has a menu, the title menu appears on the screen. Otherwise, the disc menu may not appear.

DISPLAY : Accesses On-Screen Display.

MENU : Accesses the menu on a DVD disc.

SETUP : Accesses or removes setup menu.

PRESET (∧ ∨) : Selects programmed of Radio.

TUN. (-/+) : Tunes in the desired radio station.

∧ ∨ < > (up/ down/ left/ right): Used to navigate onscreen displays.

ENTER : Acknowledges menu selection.

TV→SPK : To select the AUX OPT directly.

MUTE : To mute the sound.

VOL (Volume) (+/-) : Adjusts speaker volume.

EQ/ LG EQ (Equalizer effect) : You can choose sound impressions.

REPEAT/RANDOM : To select a play mode. (repeat/ random)

SUBTITLE : During playback, you can select a desired subtitle language.

0-9 numerical buttons : Selects numbered options in a menu.

OSD initial language settings - Optional

When using this unit for the first time, the initial language setup menu appears on your TV screen. You must complete initial language selection before using the unit.

	ON REMOTE
1 **Turn the power on** The language list appears	POWER
2 **Select the language**	< > ∧ ∨
3 **Press**	ENTER
4 **To confirm press**	ENTER

Initial setting of the Area Code - Optional

When you use this unit for the first time, you have to set the Area Code as shown below.

	ON REMOTE
1 **Display setup menu**	SETUP
2 **Select LOCK menu on the first level**	∧ ∨
3 **Move to second level** The activated Area Code appears on the second level.	>
4 **Move to the third level**	>
5 **Enter a new password**	Numeric (0-9) and ENTER
6 **Recheck the entered new password**	Numeric (0-9) and ENTER
7 **Select a code for a geographic area** After select, Rating and Password will be activated.	∧ ∨ < >
8 **To confirm what you press** Make sure to finish setting the Area Code.	ENTER

Adjusting the general settings

	ON REMOTE
1 Display setup menu	SETUP
2 Select a desired option on the first level	∧ ∨
3 Move to the second level	>
4 Select a desired option on the second level	∧ ∨
5 Move to the third level	>
6 Change the setting	∧ ∨, ENTER

Adjusting the general settings - more you can do

Adjusting the language settings

OSD (Menu Language) – Select a language for the Setup menu and on-screen display.

Disc Audio/ Disc Subtitle/ Disc Menu – Select a language for the Disc Audio/ Disc Subtitle/ Disc Menu.

[Original] : Refers to the original language in which the disc was recorded.

[Other] : To select another language, press number buttons then **ENTER** to enter the corresponding 4-digit number according to the language code list in the reference chapter (Page 19). If you make a mistake before pressing **ENTER**, press **CLEAR**.

[Off] (for Disc Subtitle) : Turn off Subtitle.

Adjusting the display settings

TV Aspect – Select which screen aspect to use based on the shape of your TV screen.

[4:3] Select when a standard 4:3 TV is connected.
[16:9] Select when a 16:9 wide TV is connected.

Display Mode – If you selected 4:3, you'll need to define how you would like wide screen programs and films to be displayed on your TV screen.

[Letterbox] This displays a wide screen picture with black bands at the top and bottom of the screen.
[Panscan] This fills the entire 4:3 screen, cropping the picture as necessary.

Progressive Scan (For Component Video connections) – Selects whether the COMPONENT/PROGRESSIVE SCAN OUTPUT jacks output progressive signal. If your TV accepts progressive format signals, you will enjoy accurate color reproduction and high quality image by selecting [On]. If your TV does not accept progressive format signals, select [Off].

If you set Progressive Scan to [On] in error, you must reset the unit. First, remove the disc from the unit. Next, press and hold STOP for five seconds. The video output will be restored to the standard setting, and a picture will be visible on your TV.

Adjusting the audio settings

DRC (Dynamic Range Control) – Make the sound clear when the volume is turned down (Dolby Digital only). Set to [On] for this effect.

Vocal – Select [On] to mix karaoke channels into normal stereo.
This function is effective for multi-channel karaoke DVDs only.

Adjusting the lock settings

To access the lock options, you must enter the 4-digit password. If you have not yet entered a password you are prompted to do so.

1 Enter a 4-digit password then press **ENTER**.

2 Enter it again then press **ENTER** to verify. If you make a mistake while entering number, press **CLEAR** then correct it.

Area Code – Select a code for a geographic area as the playback rating level. This determines which area's standards are used to rate DVDs controlled by the parental lock. See the Area Codes on page 19.

Rating – Select a rating level. The higher the level is, the stricter the rating. Select [Unlock] to deactivate the rating.
Password – Sets or changes the password for lock settings.
[New] Enter a new 4-digit password using the numerical buttons then press **ENTER**. Enter the password again to confirm.
[Change] Enter the new password twice after entering the current password.

If you forget your password you can reset it.
1 Remove the disc in the unit.
2 Press **SETUP** to display the Setup menu. Input '210499' and press **ENTER**. The password has now been cleared.

Adjusting the others settings

DivX(R) Registration – We provide you with the DivX® VOD (Video On Demand) registration code that allows you to rent and purchase videos using the DivX® VOD service.
For more information, visit www.divx.com/vod.
Press **ENTER** and you can view the registration code of the unit.

Enjoying a pre-programmed sound field

The system has a number of pre-set surround sound fields. You can select a desired sound mode by using **EQ/ LG EQ**. The displayed items for the Equalizer may be different depending on sound sources and effects.

NATURAL	You can enjoy comfortable and natural sound.
Local specialization equalizer	Regionally optimized sound effect. (DANGDUT/ ARABIC/ PERSIAN/INDIA/ REGUETON/ MERENGUE/ SAMBA/ SALSA)
AUTO EQ	Sets the sound equalizer to the mode that is the most similar to the genre which is included in the MP3 ID3 tag of song files.
POP **CLASSIC** **JAZZ** **ROCK**	This program lends an enthusiastic atmosphere to the sound, giving you the feeling you are at an actual rock pop, jazz or classic concert.
MP3 OPT	This function is optimized for compressible MP3/WMA file. It improves the bass sound.
XDSS ON	Reinforce the treble, bass and surround sound effect.
VIRTUAL	You can enjoy more virtual surround sound.
NORMAL	You can enjoy the sound without equalizer effect.

Setting the Clock

	ON UNIT
1 Turn the power on	⏻/I
2 Press for at least 2 seconds	**CLOCK**
3 Choose from either AM 12:00 (for an AM and PM display) or 0:00 (for a 24 hour display)	**I<< / >>I**
4 Confirm your selection	**SET**
5 Select the hours	**I<< / >>I**
6 Press	**SET**
7 Select the minutes	**I<< / >>I**
8 Press	**SET**

Using your player as an alarm clock

1.Turn the power on.
2 Press **TIMER**. Each functions flashes.
3 Press **SET** when the function you want to be woken by is showing.
4 “ON TIME” will be displayed. This is where you set the time you want the alarm to start. Use **I<< / >>I** to change the hours and minutes and **SET** to save.
5 The “OFF TIME” will be displayed. This is where you set the time you want the function to stop.
6 Use **I<< / >>I** to change the hours and minutes and press **SET** to save.
7 You will be shown the volume (VOL) you want to be woken by. Use **I<< / >>I** to change the volume and **SET** to save. The clock icon “ ◷ ” shows that the alarm is set.
8 Press **TIMER** button 2times. You can check the setting status.

Note

- If you set the clock time, you can check the time by pressing **CLOCK** even when the player is turned off.
- If you set the clock time and alarm, you can check the alarm icon “ ◷ ” by pressing **CLOCK** even when the player is turned off.

TV sound EZ setup

You can enjoy sound from TV, DVD and Digital Device. Even in power off mode, if you press **TV→SPK**, then power is turned on and automatically changed to the AUX OPT mode.

	ON REMOTE
1 Connect the unit’s OPTICAL IN jack to the optical out of your TV (or Digital Device etc).	
2 Select the AUX OPT To select the AUX OPT directly.	**TV→SPK**
3 Enjoy sound	
4 To escape from AUX OPT	**TV→SPK**

Displaying Disc information

	ON REMOTE
1 Press	DISPLAY
2 Select an item	∧ ∨
3 Adjust the display menu settings	< >
4 To return or exit	RETURN

Displaying Disc Information - more you can do

You can select an item by pressing ∧ ∨ and change or select the setting by pressing < >.

1/23	Current title (or track/ file) number/ total number of titles (or tracks/ files)
1/7	Current chapter number/ total number of chapters
0:03:24	Elapsed playing time
1 ENG DD 5.1CH	Selected audio language or channel
Off	Selected subtitle
1/1	Selected angle/ total number of angles
NORMAL	Selected sound/ EQ mode

Symbol Used in this Manual

All discs and file listed below	ALL	MP3 files	MP3
DVD and finalized DVD±R/RW	DVD	WMA files	WMA
DivX files	DivX	Audio CDs	ACD
JPEG files	JPG		

Playing a Disc or file

	ON UNIT	ON REMOTE
1 Insert a disc on unit		
2 Select a DVD/CD	FUNC.	FUNCTION
3 Adjust the menu settings / Select a file from the menu		< > ∧ ∨
4 Start the Disc playing	▶/❚❚	▶ PLAY
5 To stop the Disc playing	■	■ STOP

Playing a Disc or file - more you can do

Mixed disc or USB Flash Drive – DivX, MP3/ WMA and JPEG

When playing a disc or USB Flash Drive containing with DivX, MP3/ WMA and JPEG files together, you can select menu of files which you would like to play by pressing **MENU**.

Moving to the previous/ next page on the file list menu

MP3 WMA DivX ACD JPG

Press and hold ∧ ∨ to move to the previous or next page.

Playing a DVD that has a menu DVD

Most DVDs now have menus which load first before the film begins to play.

1 You can navigate through these menus using ∧ ∨ < > to highlight an option.
2 Press **PLAY** to select.

Skipping to the next/ previous chapter/ track/ file

MP3 WMA DVD DivX ACD

Press **SKIP** (▶▶I) to move to the next chapter/ track/ file.
Press **SKIP** (I◀◀) to return to the beginning of the current chapter/ track/ file.
Press **SKIP** (I◀◀) twice briefly to step back to the previous chapter/ track/ file.

Pausing playback ALL

1 Press **PAUSE/STEP** (❚❚) to pause playback.
2 Press **PLAY** (▶) to continue playback.

Frame-by-Frame playback DVD DivX

Press **PAUSE/STEP** (❚❚) repeatedly to play title Frame-by-Frame.

Playing repeatedly or randomly MP3 WMA DVD DivX ACD

Press **REPEAT/RANDOM** repeatedly, and the current title, chapter or track will be played back repeatedly or randomly.
To return to normal playback, press **REPEAT/RANDOM** repeatedly.
- Random play mode : only music files.

Fast forward or fast reverse MP3 WMA DVD DivX ACD

Press **SCAN** (◀◀ or ▶▶) to play fast forward or fast reverse during playback. You can change the playback speed by pressing **SCAN** (◀◀ or ▶▶) repeatedly. Press **PLAY** (▶) to continue play at normal speed.

Slow down the playing speed DVD

While playback is paused, press **SCAN** (◀◀ or ▶▶) to slow down forward or reverse playback. You can change the various playback speed by pressing **SCAN** (◀◀ or ▶▶) repeatedly. Press **PLAY** (▶) to continue play at normal speed.

1.5 times faster playback DVD

Press **PLAY** (▶) when a DVD is already playing to watch and listen to a DVD 1.5 times faster than normal playback speed. "▶ x1.5" will appear in the screen. Press **PLAY** (▶) again to return to normal playback speed.

Selecting a subtitle language DVD DivX

During playback, press **SUBTITLE** repeatedly to select a desired subtitle language.

Changing the character set to display DivX® subtitle correctly - Optional DivX

1 If the subtitle does not display properly during playback, press and hold **SUBTITLE** for about 3 seconds to display the language code menu.
2 Press **SUBTITLE** repeatedly to change the language code until the subtitle is displayed properly.

Viewing the Title menu DVD

Press **TITLE** to display the disc's title menu, if available.

Starting play from selected time DVD DivX

Searches for the starting pointing of entered time code.
1 Press **DISPLAY** then select clock icon.
2 Enter a time then press **ENTER**.
For example, to find a scene at 1 hour, 10 minutes, and 20 seconds, enter "11020" by using numerical buttons and press **ENTER**. if you enter the wrong number, press **CLEAR** to enter again.

Last Scene Memory DVD

This unit memorizes the last scene from the last disc that is viewed. The last scene remains in memory even if you remove the disc from the player or switch off (Stand-by mode) the unit. If you load a disc that has the scene memorized, the scene is automatically recalled.

Creating your own program ACD MP3 WMA

You can play the contents of a disc in the order you want by arranging the order of the music on the disc. The program is cleared when the disc is removed.
1 Select a desired music then press **PROG./MEMO.** or select " ♫→ " and then press **ENTER** to add the music to the program list.
2 To add all music in the disc, select " ♫♫→ " and then press **ENTER**.
3 Select a music from the program list then press **ENTER** to start programmed playback.
4 To clear a music from the program list, select the music you want to clear then press **CLEAR** or select " ♫Ⅲ " icon and then press **ENTER**. To clear all music from the program list, select " ♫♫Ⅲ " then press **ENTER**.

Displaying file information (ID3 TAG) MP3

You can check the ID3 TAG information of MP3 files only in discs by pressing **DISPLAY** repeatedly.

Viewing photo files as a slide show JPG

1 Use ∧ ∨ < > to highlight (▶) icon then press **ENTER** to start slide Show.
2 You can change slide show speed using < > when (▶◷) icon is highlighted.

Skipping to the next/ previous photo JPG

Press **SKIP** (I◀◀ or ▶▶I) or < > to view the previous/ next photo.

Rotating a photo JPG

Use ∧ ∨ to rotate the photo in full screen counterclockwise or clockwise while viewing a photo in full screen.

Screen Saver

The screen saver appears when you leave the unit in Stop mode for about five minutes.

System Select - Optional

You must select the appropriate system mode for your TV system. If “NO DISC” appears in the display window, press and hold **PAUSE/STEP** (❚❚) for more than five seconds to be able to select a system. (PAL/ NTSC/ AUTO)

Playable file requirement

DivX

- Available resolution: up to 800x600 (W x H) pixels
- The file name of the DivX subtitle should be 45 characters or less.
- If there is a code impossible to express in the DivX file, it may be displayed as a “ _ ” mark on the display.
- If the video and audio structure of recorded files are not interleaved, either video or audio is output.
- Playable DivX file : “.avi”, “.mpg”, “.mpeg”, “.divx”
- Playable Subtitle format : SubRip (*.srt/ *.txt), SAMI (*.smi), SubStation Alpha (*.ssa/ *.txt), MicroDVD (*.sub/ *.txt), SubViewer 2.0 (*.sub/ *.txt)
- Playable Codec format : “DIVX3.xx”, “DIVX4.xx”, “DIVX5.xx”, “MP4V3”, “3IVX”
- Playable Audio format : “AC3”, “PCM”, “MP3”, “WMA”
- For Discs formatted in Live file system, you can not play it on this player.
- If the name of a movie file is different from that of the subtitle file, during playback of a DivX file, the subtitle may not be displayed.
- If you play a DivX file different from the DivX spec, it may not operate normally.

MP3/ WMA

- Sampling frequency : between 32 to 48kHz (MP3/ WMA)
- Bit rate : between 32 to 320 kbps (MP3), 40 to 192 kbps (WMA)
- File extensions : “.mp3”/ “.wma”
- CD-ROM file format : ISO9660 LEVEL 1 / JOLIET
- We recommend that you use Easy-CD Creator, which creates an ISO 9660 file system.
- They should not contain special letters such as / ? * : “ < > I etc.
- The total number of files on the disc should be less than 999.

This unit requires discs and recordings to meet certain technical standards in order to achieve optimal playback quality. Pre-recorded DVDs are automatically set to these standards. There are many different types of recordable disc formats (including CD-R containing MP3 or WMA files) and these require certain pre-existing conditions (see above) to ensure Compatible playback.

Customers should note that permission is required in order to download MP3/ WMA files and music from the Internet. Our company has no right to grant such permission. Permission should always be sought from the copyright owner.

JPG

- Normal: 5 120 x 3 840, Progressive jpeg : 2 043 x 1 536
- Recording condition: ISO9660 LEVEL 1/ JOLIET
- Maximum files : Under 999.
- Some discs may not operate due to a different recording format or the condition of disc.
- File extensions: “.jpg”

Listening to the radio

Make sure both the FM and AM aerial be fully extended.

	ON UNIT	ON REMOTE
1 Select FM or AM	**FUNC.**	**FUNCTION**
2 Select a radio station	**I<< / >>I**	**TUN.- / +**
3 To save a radio station A preset number will show in the display.		**PROG./MEMO.**
4 Select the preset number Up to 50 radio stations can be saved.		**PRESET ∧ ∨**
5 To confirm press		**PROG./MEMO.**

Listening to the radio - More you can do

Looking for radio stations automatically

Press and hold **TUN.-/ TUN.+** for more than a second. The tuner will scan automatically and stop when it finds a radio station.

Deleting all the saved stations

1 Press and hold **PROG./MEMO.** for two seconds.
- "ERASE ALL" will flash up on the display.

2 Press **PROG./MEMO.** to erase all saved radio stations.

Improving poor FM reception

Press **PLAY** (▶) (MO./ST.) on the remote control. This will change the tuner from stereo to mono and usually improve the reception.

Using a Bluetooth wireless technology

Pairing your unit and Bluetooth device

Pairing links this unit and Bluetooth device, and is required only once for the initial setup. Before you start the pairing procedure, make sure the Bluetooth feature is turned on in to your Bluetooth device. Refer to your Bluetooth device's user guide.

	ON UNIT	ON REMOTE
1 Select the function.	**FUNC.**	**FUNCTION**
2 Operate the Bluetooth device and perform the pairing operation **When searching for this unit with the Bluetooth device, a list of the devices found may appear in the Bluetooth device display depending on the type of Bluetooth device.Your unit appears as "LG Audio"**		
3 Enter the PIN cord. **PIN cord : 0000** **Some device doesn't need the PIN cord**		
4 When this unit is successfully paired with your Bluetooth device, Bluetooth Icon and "BT AUDIO" will appears on the display window.		
5 Select a file you want to play from your Bluetooth device.		

Note

Depending on the Bluetooth device type, some devices have a different pairing way.

Using a Bluetooth wireless technology - More you can do

Seeing information about a your Bluetooth device

Press **DISPLAY** key to display the information of the Bluetooth device connected to this unit.
Each time when you press the display key the information is switched as follows.
BT L_ADDR -> BT R_NAME -> BT condition.
If not connected the Bluetooth device to the unit the information is switched such as BT L_ADDR and BT condition
- BT L_ADDR : FB164 Bluetooth Device Address
- BT R_NAME : your device name connected to the unit
- BT : Bluetooth

Bluetooth Profiles

In order to use Bluetooth technology, devices must be able to interpret certain profiles.
This unit is compatible with following profile.

A2DP (Advanced Audio Distribution Profile)
A2DP technology is a new music revolution allowing you to send CD quality stereo music from one device to another without wires. A2DP is stereo music sent over Bluetooth without the hassle of plugging cables. Bluetooth Wireless Technology with A2DP technology makes mobile phones, pda's and computers capable of streaming music directly to products such as the FB164 System. The Advanced Audio Distribution Profile (A2DP) is just one of the modes available for Bluetooth technology.

Bluetooth®

Bluetooth® wireless technology is a system which allows radio contact between electronic devices within a max. range of 10 meters.
Connecting individual devices under *Bluetooth®* wireless technology does not incur any charges. A mobile phone with *Bluetooth®* wireless technology can be operated via the Cascade if the connection was made via *Bluetooth®* wireless technology.
The *Bluetooth®* word mark and logos are owned by the *Bluetooth®* SIG, Inc. and any use of such marks by LG Electronics is under license.
Other trademarks and trade names are those of their respective owners.

Caution

- This units be supported the Stereo Headset Profile (A2DP).
- This units dose not be supported the Mono Headset Profile (Hands Free Profile)
- The sound may be interrupted when the connection interfered by the other electronic wave
- You cannot control the Bluetooth device with this unit.
- Pairing is limited one Bluetooth device per one unit and multi-pairing is not supported.
- Although the distance between your Bluetooth and the set is less than 10m, there are obstacles between both, your Bluetooth device cannot be connected.
- Depending on the type of the device, you may not be able to use the Bluetooth function.
- You can enjoy wireless system using phone, MP3, Notebook, etc...
- When not connected the Bluetooth, "NO BT DEV" appears on the display window.
- When connected the Bluetooth, "BT AUDIO" appears on the display window.
- The Electrical malfunction due to devices using same frequency such as Medical equipment, Microwaves or wireless LAN devices, the connection will be disconnected.
- When someone stands and interrupts communication between Bluetooth device and the player, the connection will be disconnected.
- If the gotten away of the distance between Bluetooth and the unit, the sound quality is lower and lower the connection will disconnect when the space between the Bluetooth and the unit gets out of the operating range of Bluetooth.
- The device with Bluetooth wireless technology is disconnected, if you turn off the main unit or put the device away from the main unit more than 10m.

Listening to music from your portable player

The unit can be used to play the music from many types of portable player.

	ON UNIT	ON REMOTE
1 Connect the portable player to the PORT.IN (PORTABLE IN) connector on the unit.		
2 Turn the power on.	⏻/I	⏻ POWER
3 Select the function. Turn on the portable player and start it playing.	FUNC.	FUNCTION

Using an USB device

You can enjoy media files saved on an USB device by connecting it to the USB port of the unit. If you want to operate other function, see the Playing a Disc or file section.

	ON UNIT	ON REMOTE
1 Open the USB port cover.		
2 Connect the USB device to the USB port of the unit.		
3 Select the function.	FUNC.	FUNCTION
4 Select a file you want to play.		∧ ∨
5 Start your media playing.	▶/II	▶ PLAY
6 To stop, press	■	■ STOP
7 Before disconnecting, you have to change to any other function.	FUNC.	FUNCTION

Compatible USB Devices

- MP3 Player : Flash type MP3 player.
- USB Flash Drive : Devices that support USB2.0 or USB1.1.
- The USB function of this unit does not support all USB devices.

USB device requirement

Devices which require additional program installation when you have connected it to a computer, are not supported.

Look out for the following

- Do not extract the USB device while in operation.
- For a large capacity USB, it may take longer than a few minute to be searched
- To prevent data loss, back up all data.
- If you use a USB extension cable or USB hub, the USB device is not recognized.
- Using NTFS file system is not supported. (Only FAT(16/32) file system is supported.)
- This unit is not supported when the total number of files is 1000 or more.
- External HDD, Card readers, Locked devices, or hard type USB devices are not supported.
- USB port of the unit cannot be connected to PC.
- The unit can not be used as a storage device.

Recording to USB

	ON UNIT	ON REMOTE
1 Connect the USB device to the USB port of the unit.		
2 Select a mode in which you want to record (ex. CD/ TUNER/ ...) Play a sound source first. If you want to record desired music file in disc to USB, play a file before starting the recording.	**FUNC.**	**FUNCTION**
3 Start the recording	**USB REC.**	**● REC**
4 To stop, press	**■**	**■ STOP**

Recording to USB - more you can do

Recording Music file in disc source to USB

One track recording
If the USB recording is started during playback of the CD, the one track/ file would be recorded onto the USB.

All tracks recording
If the record button is pressed with the CD stopped. all tracks/ files will be recorded.
- The files in the sub-folders are not recorded during all track recording.
- If you want to stop all tracks recording during playback, press stop twice. check the "■"on the screen.

Program list recording
USB records after creating your own program if you want to record the track you want (AUDIO CD Only).

When you are recording, look out for the following

- You can check the recording percentage rate for the USB record on the screen during the recording.(AUDIO, MP3/ WMA CD only)
- During recording MP3/ WMA, there is no sound.
- When you stop recording during playback, the file that has been recorded at that time will be stored.(AUDIO CD Only)
- Do not remove the USB device during USB recording. It will result in an incomplete file being made and may not be deleted on a PC.
- If USB recording does not work, messages like "NO USB", "ERROR", "USB FULL" or "NO REC" will be displayed on the display window.
- Multi card reader device or External HDD can not be used for USB recording.
- A file is recorded by 2 hours when you record for a long term.
- when you stop recording during playback, the file will not be stored.
- USB record is not possible from CD-G discs.
- You may not record more than 999 files.
- The file number is saved automatically.
- **It'll be stored as follows.**

AUDIO CD	MP3/ WMA	The other sources
CD_REC TRK－001 TRK－002 ⋮	FILE_REC 001 _ ABC(File name) 002_ DEF(File name) ⋮	EXT_REC AUD－001 AUD－002 ⋮

The making of unauthorized copies of copy-protected material, including computer programs, files, broadcasts and sound recordings, may be an infringement of copyrights and constitute a criminal offense. This equipment should not be used for such purposes.
Be responsible
Respect copyrights

Playing the iPod

For detail refer to iPod guide.
iPod mode: You can operate your iPod by using the supplied remote control and directly control your iPod.
OSD iPod mode: You can operate your iPod by controlling OSD menu on the TV screen with supplied remote control. The controls on your iPod are not operational in the OSD iPod mode.

	ON UNIT	ON REMOTE
1 Open the iPod dock cover. 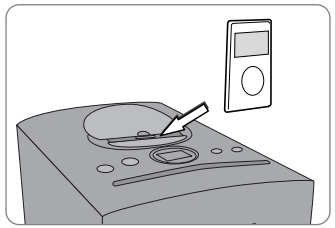		
2 Connect your iPod to the dock.		
3 Select the iPod or OSD iPod function	**FUNC.**	**FUNCTION**
4 Select the menu If you want to move backwards in the menu, press **MENU**.		**∧ ∨ and ENTER**
5 Select a file		**∧ ∨**
6 Start the file playing	**▶/❚❚**	**▶ PLAY**
7 To stop the file playing	**■**	**■ STOP**
8 Before disconnecting the iPod, change to any other function by pressing	**FUNC.**	**FUNCTION**
9 Remove the iPod		

Playing the iPod - more you can do

Pausing playback

Press **PAUSE/STEP** (❚❚) or **PLAY** (▶) to pause playback.
Press **PAUSE/STEP** (❚❚) or **PLAY** (▶) to continue playback.

Skipping to the next/previous file

Press **SKIP** (▶▶❙) to move to the next file.
Press **SKIP** (❙◀◀) to return to the beginning of the current file.
Press **SKIP** (❙◀◀) twice briefly to step back to the previous file.

Fast forward or fast reverse

During playback, press and hold **SCAN** (◀◀ / ▶▶) and then release at a point you want.

Playing repeatedly

Press **REPEAT/RANDOM** repeatedly to select an item to be repeated. The current file will be played back repeatedly. To return to normal playback, press **REPEAT/RANDOM** repeatedly. (On video files, this function is not available.)

iPod message

"**Please check your iPod.**" - If the power of your iPod is insufficient or the iPod is misconnected or unknown device. Reset the iPod if the iPod is not operating normally (Refer to http://www.apple.com/support/)
"Connect Video Out(only composite) from the HTS to the TV and switch TV input accordingly.", "Please, Control through an iPod's display." - When you connect the unit and TV to COMPONENT VIDEO OUT, connect the unit and TV to VIDEO OUT.

Compatible iPod

- It works with all iPod models that have a dock connector.
- Compatibility with your iPod may vary depending on the type of your iPod.
- Depending on your iPod's software version, it may not be possible to control your iPod from the unit. We recommend installing the latest software version.

When you use iPod, look out for the following

- Interference may happen depending on iPod devices.
- The video files are outputted only when you connect the unit to VIDEO OUT.

Language Codes

Use this list to input your desired language for the following initial settings: Disc Audio, Disc Subtitle, Disc Menu.

Language	Code	Language	Code	Language	Code	Language	Code	Language	Code	Language	Code
Afar	6565	Croatian	7282	Hausa	7265	Lingala	7678	Quechua	8185	Tajik	8471
Afrikaans	6570	Czech	6783	Hebrew	7387	Lithuanian	7684	Rhaeto-Romance	8277	Tamil	8465
Albanian	8381	Danish	6865	Hindi	7273	Macedonian	7775	Rumanian	8279	Telugu	8469
Ameharic	6577	Dutch	7876	Hungarian	7285	Malagasy	7771	Russian	8285	Thai	8472
Arabic	6582	English	6978	Icelandic	7383	Malay	7783	Samoan	8377	Tonga	8479
Armenian	7289	Esperanto	6979	Indonesian	7378	Malayalam	7776	Sanskrit	8365	Turkish	8482
Assamese	6583	Estonian	6984	Interlingua	7365	Maori	7773	Scots Gaelic	7168	Turkmen	8475
Aymara	6588	Faroese	7079	Irish	7165	Marathi	7782	Serbian	8382	Twi	8487
Azerbaijani	6590	Fiji	7074	Italian	7384	Moldavian	7779	Serbo-Croatian	8372	Ukrainian	8575
Bashkir	6665	Finnish	7073	Japanese	7465	Mongolian	7778	Shona	8378	Urdu	8582
Basque	6985	French	7082	Kannada	7578	Nauru	7865	Sindhi	8368	Uzbek	8590
Bengali; Bangla	6678	Frisian	7089	Kashmiri	7583	Nepali	7869	Singhalese	8373	Vietnamese	8673
Bhutani	6890	Galician	7176	Kazakh	7575	Norwegian	7879	Slovak	8375	Volapük	8679
Bihari	6672	Georgian	7565	Kirghiz	7589	Oriya	7982	Slovenian	8376	Welsh	6789
Breton	6682	German	6869	Korean	7579	Panjabi	8065	Spanish	6983	Wolof	8779
Bulgarian	6671	Greek	6976	Kurdish	7585	Pashto, Pushto	8083	Sudanese	8385	Xhosa	8872
Burmese	7789	Greenlandic	7576	Laothian	7679	Persian	7065	Swahili	8387	Yiddish	7473
Byelorussian	6669	Guarani	7178	Latin	7665	Polish	8076	Swedish	8386	Yoruba	8979
Chinese	9072	Gujarati	7185	Latvian, Lettish	7686	Portuguese	8084	Tagalog	8476	Zulu	9085

Area Codes

Choose a area code from this list.

Area	Code	Area	Code	Area	Code	Area	Code	Area	Code	Area	Code
Afghanistan	AF	Costa Rica	CR	Greenland	GL	Maldives	MV	Paraguay	PY	Sri Lanka	LK
Argentina	AR	Croatia	HR	Hong Kong	HK	Mexico	MX	Philippines	PH	Sweden	SE
Australia	AU	Czech Republic	CZ	Hungary	HU	Monaco	MC	Poland	PL	Switzerland	CH
Austria	AT	Denmark	DK	India	IN	Mongolia	MN	Portugal	PT	Taiwan	TW
Belgium	BE	Ecuador	EC	Indonesia	ID	Morocco	MA	Romania	RO	Thailand	TH
Bhutan	BT	Egypt	EG	Israel	IL	Nepal	NP	Russian Federation	RU	Turkey	TR
Bolivia	BO	El Salvador	SV	Italy	IT	Netherlands	NL	Saudi Arabia	SA	Uganda	UG
Brazil	BR	Ethiopia	ET	Jamaica	JM	Netherlands Antilles	AN	Senegal	SN	Ukraine	UA
Cambodia	KH	Fiji	FJ	Japan	JP	New Zealand	NZ	Singapore	SG	United States	US
Canada	CA	Finland	FI	Kenya	KE	Nigeria	NG	Slovak Republic	SK	Uruguay	UY
Chile	CL	France	FR	Kuwait	KW	Norway	NO	Slovenia	SI	Uzbekistan	UZ
China	CN	Germany	DE	Libya	LY	Oman	OM	South Africa	ZA	Vietnam	VN
Colombia	CO	Great Britain	GB	Luxembourg	LU	Pakistan	PK	South Korea	KR	Zimbabwe	ZW
Congo	CG	Greece	GR	Malaysia	MY	Panama	PA	Spain	ES		

Troubleshooting

PROBLEM	CAUSE	CORRECTION
No power.	The power cord is disconnected.	Plug the power cord into the wall outlet securely.
No picture.	The TV is not set to receive the DVD signal.	Select the appropriate video input mode on the TV so the picture from the unit appears on the TV screen.
	The video cables are not connected securely.	Connect the video cables securely to both the TV and unit.
The DVD picture quality is poor.	The disc is dirty.	Clean the disc using a soft cloth with outward strokes.
A DVD/CD will not play.	No disc is inserted.	Insert a disc
	An unplayable disc is inserted.	Insert a playable disc (check the disc type, colour system and regional code).
	The disc is inserted upside down.	Place the disc in the tray with the printed side facing up.
	The menu is open on screen.	Press **SETUP** to close the menu screen.
	There is a parental lock which prevents the playback of DVDs with a certain rating.	Enter your password or change the rating level.
Humming noise heard while a DVD or CD is playing.	The disc is dirty.	Clean the disc using a soft cloth with outward strokes.
	The unit is located too close to the TV, causing feedback.	Move the unit and audio components further away from your TV.
Radio stations can't be tuned in properly.	The aerial is positioned or connected poorly.	Check the aerial connection and adjust its position.
		Attach an external aerial if necessary.
	The signal strength of the radio station is too weak.	Tune to the station manually.
	No stations have been preset or preset stations have been cleared (when tuning by scanning preset channels).	Preset some radio stations.
The remote control doesn't work well / at all.	The remote is not pointed directly at the unit.	Point the remote directly at the unit.
	The remote is too far from the unit.	Use the remote within 23 feet (7m) of the unit.
	There is an obstacle in the path between the remote control and the unit.	Remove the obstacle.
	The battery in the remote control is flat.	Replace the battery with new one.

Types of Playable Discs

Type	Logo
DVD-VIDEO : Discs such as movies that can be purchased or rented.	DVD VIDEO
DVD-R : Video mode and finalized only	DVD R
DVD-RW : Video mode and finalized only DVD VR format that have been finalized can not be played in this unit	DVD RW
DVD+R : Video mode only Supports the double layer disc also	RW DVD+R
DVD+RW : Video mode only	RW DVD+ReWritable
Audio CD : Music CDs or CD-R/ CD-RW in music CD format that can be purchased.	COMPACT disc DIGITAL AUDIO

This unit plays DVD±R/ RW and CD-R/ RW that contains audio titles, DivX, MP3, WMA or JPEG files. Some DVD±RW/ DVD±R or CD-RW/ CD-R cannot be played on this unit due to the recording quality or physical condition of the disc, or the characteristics of the recording device and authoring software.

"Dolby"and the double-D symbol are trademarks of Dolby Laboratories. Manufactured under license from Dolby Laboratories.

About the ⊘ Symbol Display

" ⊘ " may appear on your TV display during operation and indicates that the function explained in this owner's manual is not available on that specific DVD video disc.

Regional Codes

This unit has a regional code printed on the rear of the unit. This unit can play only DVD discs labeled same as the rear of the unit or "ALL".

- Most DVD discs have a globe with one or more numbers in it clearly visible on the cover. This number must match your unit's regional code or the disc cannot play.
- If you try to play a DVD with a different regional code from your player, the message "Check Regional Code" appears on the TV screen.

Copyrights

It is forbidden by law to copy, broadcast, show, broadcast via cable, play in public, or rent copyrighted material without permission. This product features the copy protection function developed by Macrovision. Copy protection signals are recorded on some discs. When recording and playing the pictures of these discs picture noise will appear. This product incorporates copyright protection technology that is protected by U.S. patents and other intellectual property rights. Use of this copyright protection technology must be authorized by Macrovision, and is intended for home and other limited viewing uses only unless otherwise authorized by Macrovision. Reverse engineering or disassembly is prohibited.

CONSUMERS SHOULD NOTE THAT NOT ALL HIGH DEFINITION TELEVISION SETS ARE FULLY COMPATIBLE WITH THIS PRODUCT AND MAY CAUSE ARTIFACTS TO BE DISPLAYED IN THE PICTURE. IN CASE OF 525 OR 625 PROGRESSIVE SCAN PICTURE PROBLEMS, IT IS RECOMMENDED THAT THE USER SWITCH THE CONNECTION TO THE 'STANDARD DEFINITION' OUTPUT. IF THERE ARE QUESTIONS REGARDING OUR TV SET COMPATIBILITY WITH THIS MODEL 525p AND 625p UNIT, PLEASE CONTACT OUR CUSTOMER SERVICE CENTER.

You have to set the disc format option to [Mastered] in order to make the discs compatible with the LG players when formatting rewritable discs. When setting the option to Live File System, you cannot use it on LG players.
(Mastered/ Live File System : Disc format system for Windows Vista)

Specifications

General	
Power supply	Refer to the main label
Power consumption	Refer to the main label
Net Weight	3.2 kg
Bus power supply (USB/iPod)	DC 5 V ⎓ 500 mA
External dimensions (W x H x D)	175 x 269 x 290 mm
Operating temperature	5 °C to 35 °C
Operating humidity	5 % to 85 %
Output power	80 W + 80 W
T.H.D	0.5 %
Tuner	
FM Tuning Range	87.5 to 108.0 MHz or 87.50 to 108.00 MHz
AM Tuning Range	522 to 1 620 kHz, 520 to 1 710 kHz or 522 to 1 710 kHz
DVD/CD	
Frequency response	40 to 20 000 Hz
Signal-to-noise ratio	75 dB
Dynamic range	75 dB
Bluetooth	
Version	Bluetooth 2.0
Output	Bluetooth standard power class 2
Frequency Band	2.4GHz band (2.4000GHz - 2.4835GHz)
Available resolution according to connection	
[COMPONENT VIDEO OUT]	480p (or 576p) and 480i (or 576i)
[VIDEO OUT]	480i (or 576i)

Specifications

Speaker	
	FBS164V
Type	3Way 4Speaker
impedance	4 Ω
Rated Input Power	80W
Max. Input Power	160W
Net Dimensions (W x H x D)	132 x 320 x 300
Net Weight	4.5 Kg

- “Made for iPod” means that an electronic accessory has been designed to connect specifically to iPod and has been certified by the developer to meet Apple performance standards.
- Apple is not responsible for the operation of this device or its compliance with safety and regulatory standards.

Designs and specifications are subject to change without prior notice.