LG
Life's Good

ENGLISH

OWNER'S MANUAL
LED TV

LG LED TV applies LCD screen with LED backlights.

Please read this manual carefully before operating the your TV and retain it for future reference.

22MA33A
24MN33A
26MA33A
29MN33A

www.lg.com

ENGLISH

TABLE OF CONTENTS

3 LICENSES

4 INSTALLATION PROCEDURE

5 ASSEMBLING AND PREPARING

5 Unpacking
7 Parts and buttons
8 Lifting and moving the TV
9 Setting up the TV
9 - Attaching the Stand Base
9 - Detaching the Stand Base
11 - Mounting on a table
12 - Using the Kensington security system
12 - Tidying cables
12 - Mounting on a wall

14 MAKING CONNECTIONS

14 Connecting an antenna
15 Connecting to a HD receiver, DVD, VCR player or Gaming device
15 - HDMI connection
16 - Composite connection
17 Connecting to a USB
18 Connecting to a PC
18 - RGB connection
19 Audio System connection
19 - External Stereo Connection

20 REMOTE CONTROL

21 WATCHING TV

21 Turning the TV on for the first time
21 Watching TV
21 Managing programmes
21 - Automatically setting up programme
22 - Manually setting up programme
23 - Editing your programme list
23 - Selecting a programme on the programme list
23 Using additional options
23 - Adjusting aspect ratio
24 - Using the input list

25 ENTERTAINMENT

25 Connecting USB storage devices
26 Browsing files
27 Viewing photos
28 Listening to music
29 Viewing movies
31 DivX® VOD Guide

32 CUSTOMIZING TV SETTING

32 Accessing main menus
32 Customizing Settings
32 - SETUP Settings
33 - PICTURE Settings
35 - AUDIO Settings
36 - TIME Settings
37 - OPTION Settings
37 - LOCK Settings

38 TELETEXT

38 Switch On/Off
38 Simple Text
38 - Page selection
38 - Programming a colour button in LIST mode
38 Fastext
38 - Page selection
38 Special Teletext Function

39 MAINTENANCE

39 Cleaning Your TV
39 Screen and frame
39 Cabinet and stand
39 Power cord

40 TROUBLESHOOTING

40 General

41 SPECIFICATIONS

LICENSES

Supported licenses may differ by model. For more information of the licenses, visit www.lg.com.

The terms HDMI and HDMI High-Definition Multimedia Interface, and the HDMI logo are trademarks or registered trademarks of HDMI Licensing LLC in the United States and other countries.

Manufactured under license from Dolby Laboratories. Dolby and the double-D symbol are trademarks of Dolby Laboratories.

ABOUT DIVX VIDEO: DivX® is a digital video format created by DivX, LLC, a subsidiary of Rovi Corporation. This is an official DivX Certified® device that plays DivX video. Visit divx.com for more information and software tools to convert your files into DivX video.

ABOUT DIVX VIDEO-ON-DEMAND: This DivX Certified® device must be registered in order to play purchased DivX Video-on-Demand (VOD) movies. To obtain your registration code, locate the DivX VOD section in your device setup menu. Go to vod.divx.com for more information on how to complete your registration.

“DivX Certified® to play DivX® video, including premium content.”

“DivX®, DivX Certified® and associated logos are trademarks of Rovi Corporation or its subsidiaries and are used under license.”

“Covered by one or more of the following U.S. patents :
7,295,673; 7,460,668; 7,515,710; 7,519,274”

INSTALLATION PROCEDURE

1 Open the package and make sure all the accessories are included.

2 Attach the stand to the TV.

3 Connect an external device to the TV.

NOTE

- Image shown may differ from your TV.
- Your TV's OSD (On Screen Display) may differ slightly from that shown in this manual.
- The available menus and options may differ from the input source or product model that you are using.
- New features may be added to this TV in the future.

ASSEMBLING AND PREPARING

Unpacking

Check your product box for the following items. If there are any missing accessories, contact the local dealer where you purchased your product. The illustrations in this manual may differ from the actual product and accessories.

NOTE

- The accessories supplied with your product may vary depending on the model.
- Product specifications or contents in this manual may be changed without prior notice due to upgrade of product functions.

CAUTION

- Do not use any pirated items to ensure the safety and product life span.
- Any damages or injuries by using pirated items are not covered by the warranty.

NOTE

- The items supplied with your product may vary depending on the model.
- Product specifications or contents of this manual may be changed without prior notice due to upgrade of product functions.
- For an optimal connection, HDMI cables and USB devices should have bezels less than 10 mm thick and 18 mm width. Use an extension cable that supports USB 2.0 if the USB cable or USB memory stick does not fit into your TV's USB port.

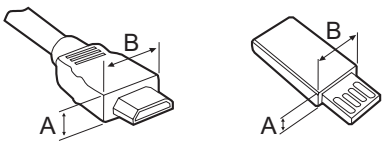

*A ≦ 10 mm
*B ≦ 18 mm

ENGLISH

22MA33A 24MN33A 26MA33A 29MN33A

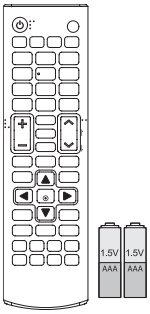

Remote control / Batteries (AAA)
(See p.20)

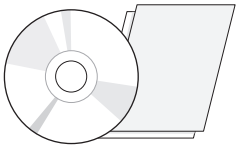

CD (Owner's Manual) / Cards

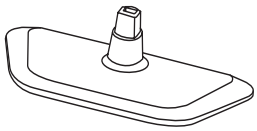

Stand Base
(See p.9)

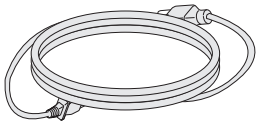

Power Cord
(See p.11)

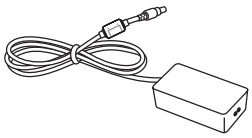

AC-DC Adapter
(Depending on the country)
(See p.11)

or

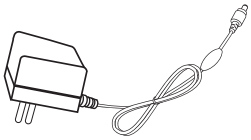

AC-DC Adapter
(Depending on the country)
(See p.11)

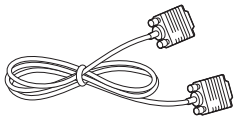

D-SUB Cable
(Depending on the country)
(See p.18)

Cable Tie
(See p.12)

ENGLISH

Parts and buttons

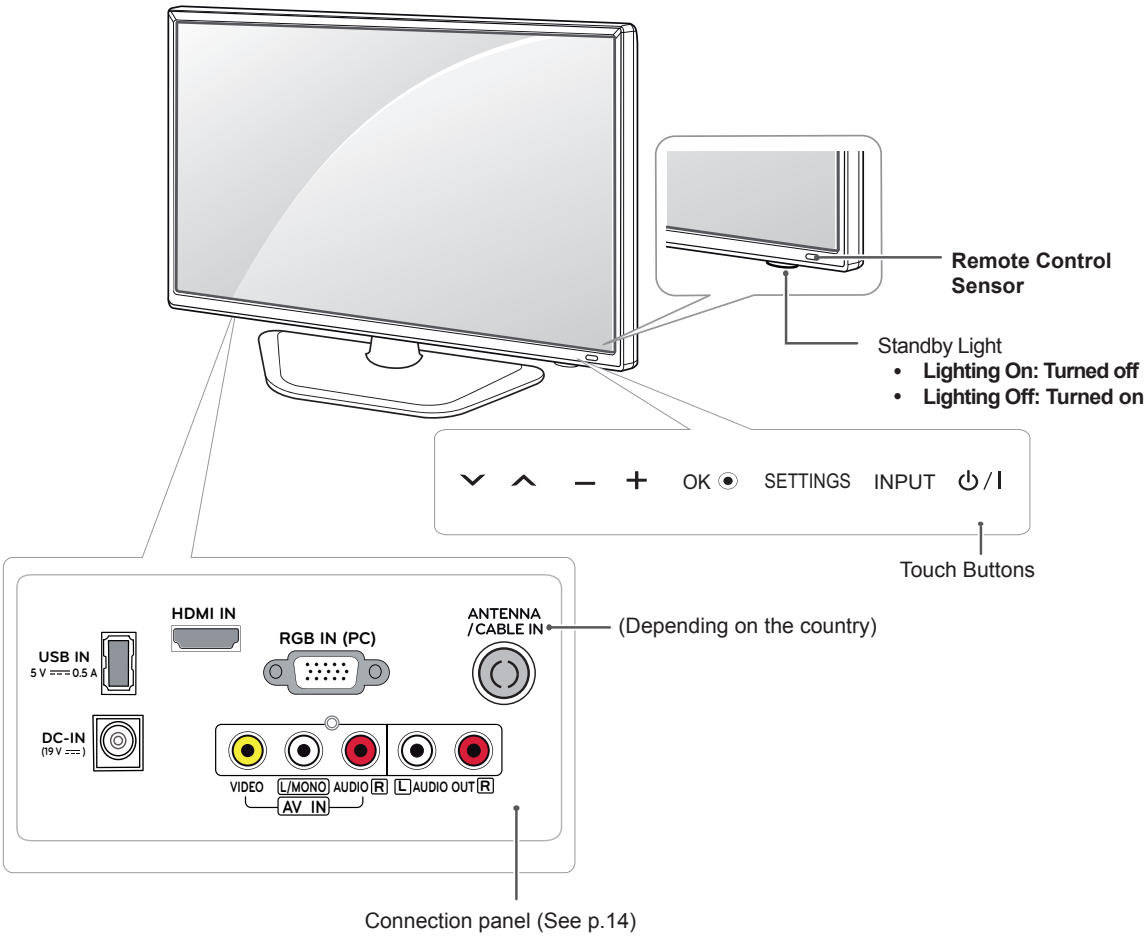

Touch button	Description
∨ ∧	Scrolls through the saved programmes.
− +	Adjusts the volume level.
OK	Selects the highlighted menu option or confirms an input.
SETTINGS	Accesses the main menus, or saves your input and exits the menus.
INPUT	Changes the input source.
⏻ / I	Turns the power on or off.

NOTE

All of the bottoms are touch sensitive and can be operated through simple touch with your finger.

ENGLISH

Lifting and moving the TV

When moving or lifting the TV, read the following to prevent the TV from being scratched or damaged and for save transportation regardless of its type and size.

CAUTION

Avoid touching the screen at all times, as this may result in damage to the screen or some of the pixels used to create images.

- It is recommended to move the TV in the box or packing material that the TV originally came in.
- Before moving or lifting the TV, disconnect the power cord and all cables.
- Hold the top and bottom of the TV frame firmly. Make sure not to hold the transparent part, speaker, or speaker grill area.

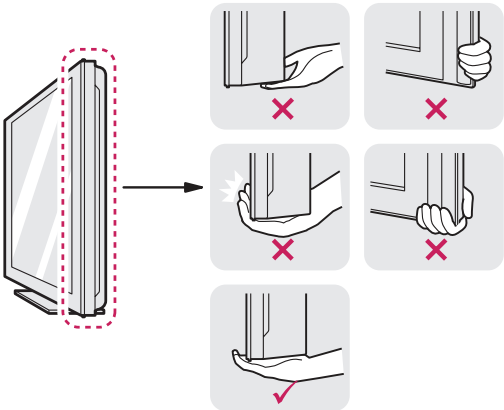

- When holding the TV, the screen should face away from you to prevent the screen from scratches.

- When transporting the TV, do not expose the TV to jolts or excessive vibration.
- When transporting the TV, keep the TV upright, never turn the TV on its side, or tilt towards the left or right.

Setting up the TV

Image shown may differ from your TV.

Attaching the Stand Base

1

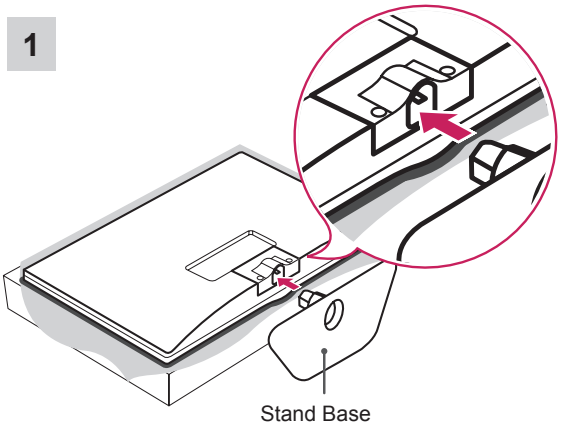

2

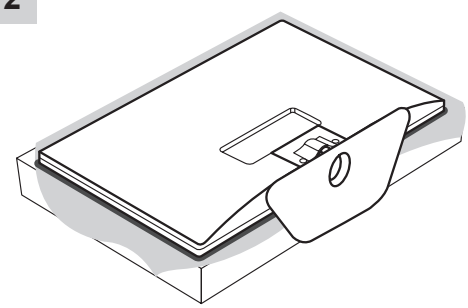

CAUTION

- Lay a foam mat or soft protective cloth on the surface to protect the screen from damage.
- When attaching the stand to the TV set, place the screen facing down on a cushioned table or flat surface to protect the screen from scratches.

Detaching the Stand Base

1

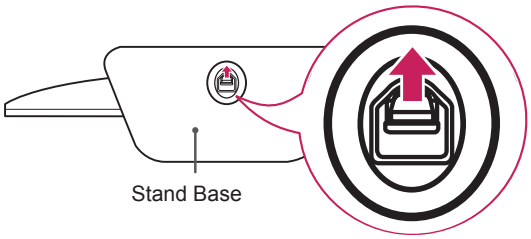

NOTE

- When Detaching the stand from TV, Detach the stand with lifting up the lever in the direction of the arrow.

2

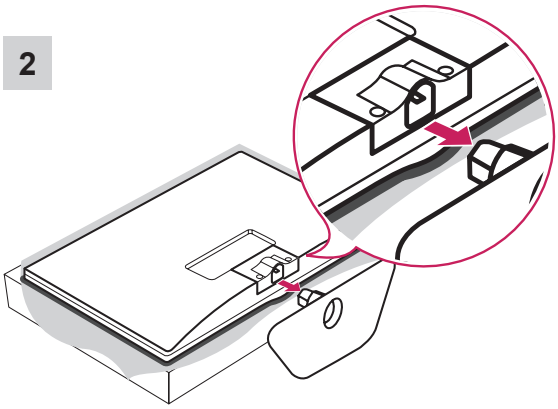

CAUTION

- Lay a foam mat or soft protective cloth on the surface to protect the screen from damage.
- When Detaching the stand to the TV set, place the screen facing down on a cushioned table or flat surface to protect the screen from scratches.

CAUTION

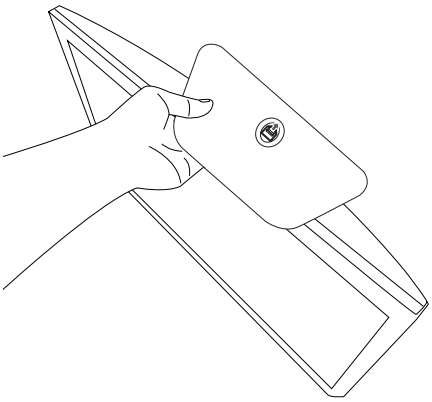

- Do not carry the monitor upside-down as this may cause it to fall off its stand, resulting in damage or injury.
- The illustration shows a general example of installation and may look different from the actual product.

Mounting on a table

1 Lift and tilt the TV into its upright position on a table.

Leave a 10 cm (4 inches) (minimum) space from the wall for proper ventilation.

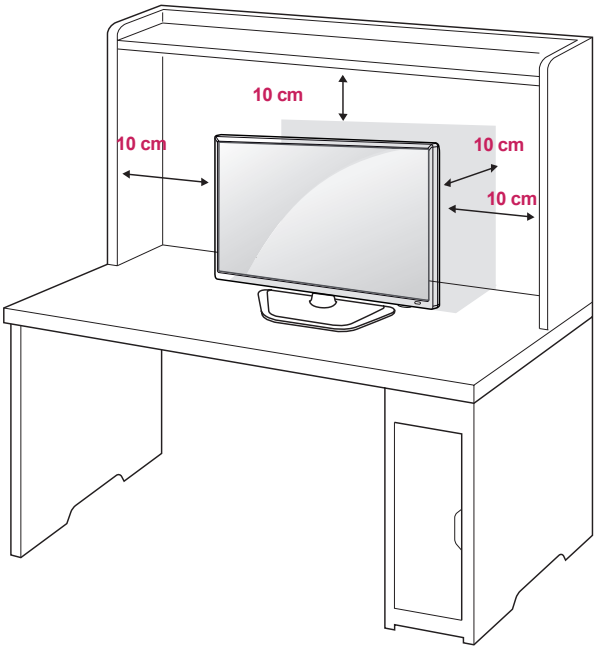

2 Connect the **AC-DC Adapter** and **Power Cord** to a wall outlet.

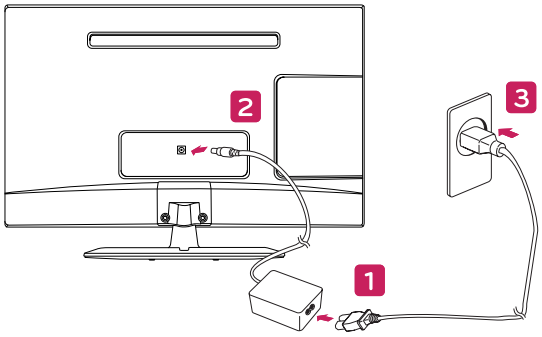

or

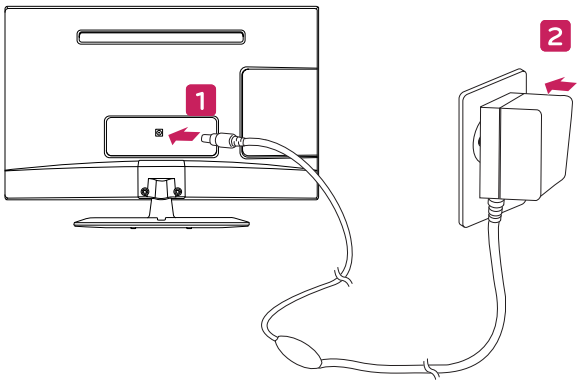

CAUTION

Disconnect the power cord first, and then move or install the TV. Otherwise electric shock may occur.

CAUTION

Do not place the TV near or on sources of heat, as this may result in fire or other damage.

ENGLISH

Using the Kensington security system

The Kensington security system connector is located at the back of the TV. For more information of installation and using, refer to the manual supplied with the Kensington security system or visit *http://www.kensington.com*.

Connect the Kensington security system cable between the TV and a table.

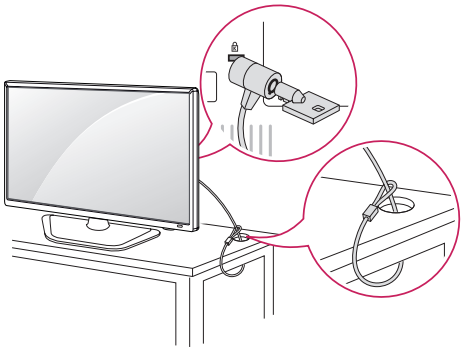

NOTE

The Kensington security system is optional. You can obtain additional accessories from most electronics stores.

Tidying cables

Gather and bind the cables with the supplied cable tie.

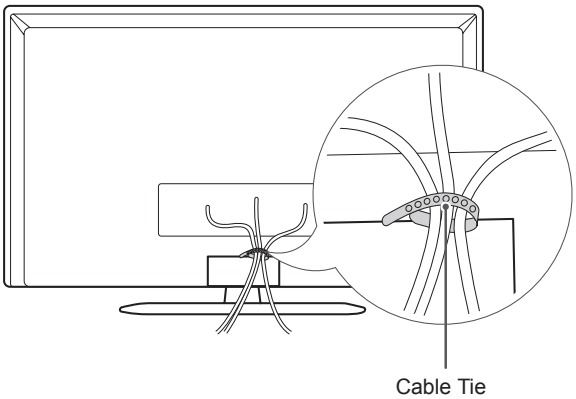

Mounting on a wall

For proper ventilation, allow a clearance of 10 cm on each side and from the wall. Detailed installation instructions are available from your dealer, see the optional Tilt Wall Mounting Bracket Installation and Setup Guide.

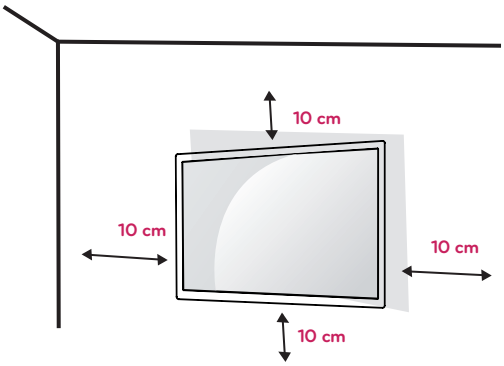

If you intend to mount the TV to a wall, attach Wall mounting interface (optional parts) to the back of the TV. When you install the TV using the wall mounting interface (optional parts), attach it carefully so it will not drop.

1 Please, Use the screw and wall mount interface in accordance with VESA Standards.

2 If you use screw longer than standard, the TV might be damaged internally.

3 If you use improper screw, the product might be damaged and drop from mounted position. In this case, LG Electronics is not responsible for it.

4 VESA compatible only with respect to screw mounting interface dimensions and mounting screw specifications.

5 Please use VESA standard as below.

- 784.8 mm (30.9 inch) and under
  * Wall Mount Pad Thickness : 2.6 mm
  * Screw : Φ 4.0 mm x Pitch 0.7 mm x Length 10 mm
- 787.4 mm (31.0 inch) and above
  * Please use VESA standard wall mount pad and screws.

VESA (A x B)	100 x 100
Standard screw	M4
Number of screws	4
Wall mount bracket (optional)	RW120 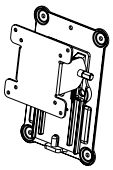

- VESA (A x B)

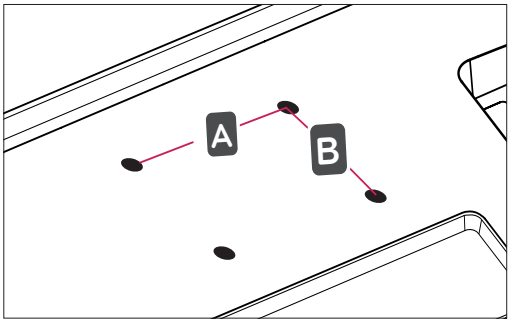

CAUTION

- Disconnect the power cord first, and then move or install the TV. Otherwise electric shock may occur.
- If you install the TV on a ceiling or slanted wall, it may fall and result in severe injury.
- Use an authorized LG wall mount and contact the local dealer or qualified personnel.
- Do not over tighten the screws as this may cause damage to the TV and void your warranty.
- Use the screws and wall mounts that meet the VESA standard. Any damages or injuries by misuse or using an improper accessory are not covered by the warranty.

NOTE

- Use the screws that are listed on the VESA standard screw specifications.
- The wall mount kit includes an installation manual and necessary parts.
- The wall mount bracket is optional. You can obtain additional accessories from your local dealer.
- The length of screws may differ depending on the wall mount. Be sure to use the proper length.
- For more information, refer to the instructions supplied with the wall mount.

ENGLISH

MAKING CONNECTIONS

Connect various external devices to the TV and switch input modes to select an external device. For more information about an external device's connection, refer to the manual supplied with each device.
Available external devices are: HD receivers, DVD players, VCRs, audio systems, USB storage devices, PC, camcorders or cameras, gaming devices, and other external devices.

NOTE

- If you record a TV program on a DVD recorder or VCR, make sure to connect the TV signal input cable to the TV through a DVD recorder or VCR. For more information about recording, refer to the manual supplied with the connected device.
- The external device connection may differ from the model.
- Connect external devices to the TV regardless of the order of the TV port.

Connecting an antenna

Connect an antenna, cable or cable box to watch TV referring to the following. The illustrations may differ from the actual accessories and an RF cable is optional.
Connect the TV to a wall antenna socket with an RF cable (75 Ω).

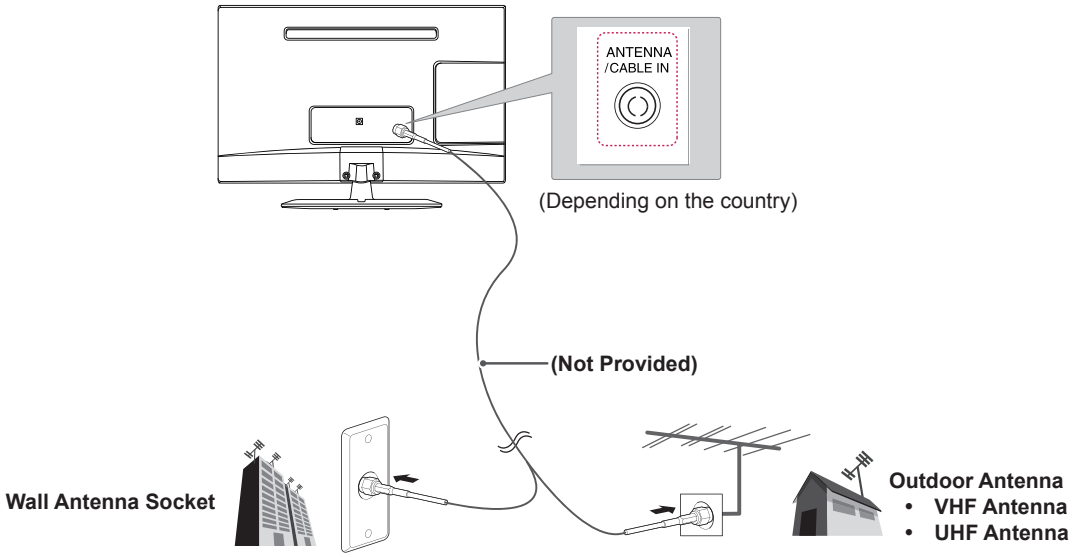

NOTE

- Use a signal splitter to use more than 2 TVs.
- If the image quality is poor, install a signal amplifier properly to improve the image quality.
- If the image quality is poor with an antenna connected, aim the antenna to the proper direction.
- Visit *http://AntennaWeb.org* for more information about the antenna and cable connection.

CAUTION

- Make sure not to bend the copper wire of the RF cable.

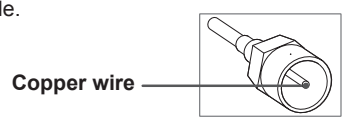

- Complete all connections instructions between devices, and then connect the power cord to the power outlet to prevent damages to your TV.

Connecting to a HD receiver, DVD, VCR player or Gaming device

Connect a HD receiver, DVD, VCR player or Gaming device to the TV and select an appropriate input mode.

HDMI connection

HDMI is the best way to connect a device.
Transmits the digital video and audio signals from an external device to the TV. Connect the external device and the TV with the HDMI cable as shown on the following illustration.

NOTE

- Use a High Speed HDMI™ Cable.
- High Speed HDMI™ Cables are tested to carry an HD signal up to 1080p and higher.
- Supported HDMI Audio format: Dolby Digital(Up to 48kHz), PCM(Up to 192 kHz, 32k/44.1k/48k/88k/96k/176k/192k)
  *DTS is not supported.

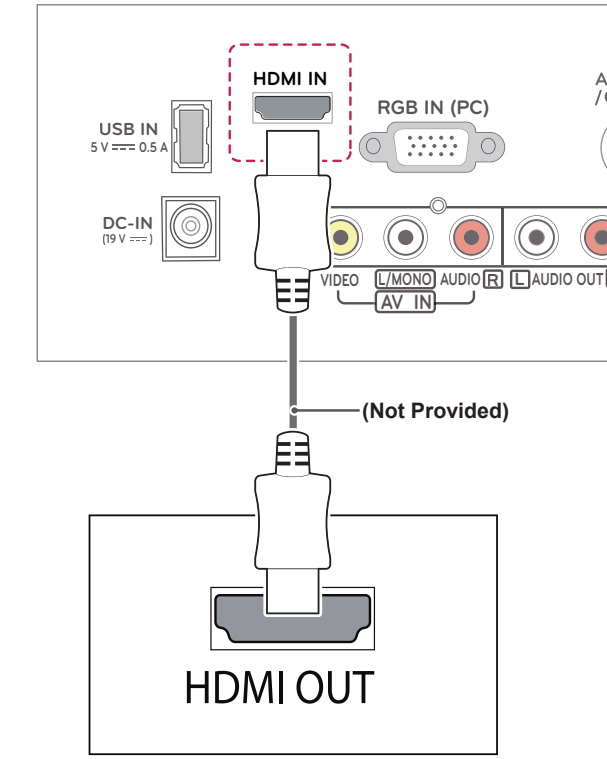

DVD / Blu-Ray / HD Cable Box / HD STB / Gaming device

ENGLISH

Composite connection

Transmits the analogue video and audio signals from an external device to the TV. Connect the external device and the TV with the composite cable as shown on the following illustration.

NOTE

Check to ensure the cables are matched with the corresponding colour connection.

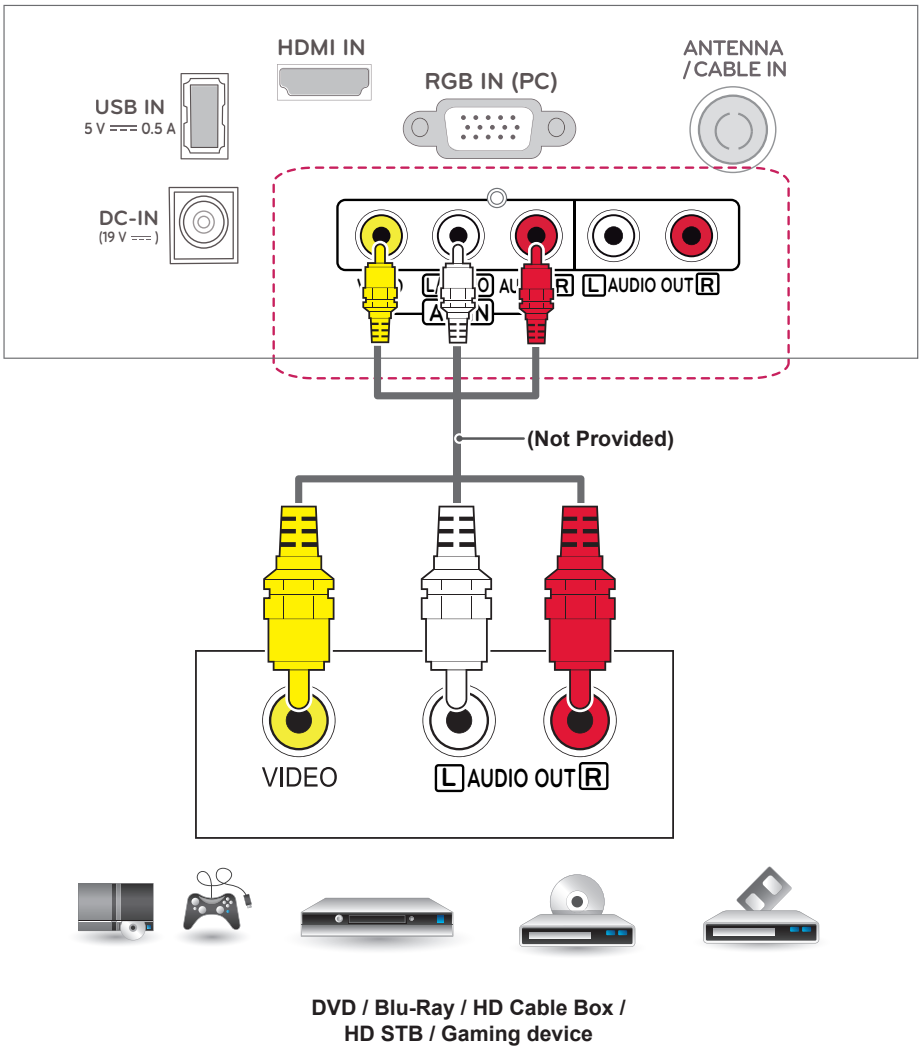

DVD / Blu-Ray / HD Cable Box / HD STB / Gaming device

Connecting to a USB

Connect a USB storage device such as s USB flash memory, external hard drive, MP3 player or a USB memory card reader to the TV and access the USB menu to use various multimedia files.

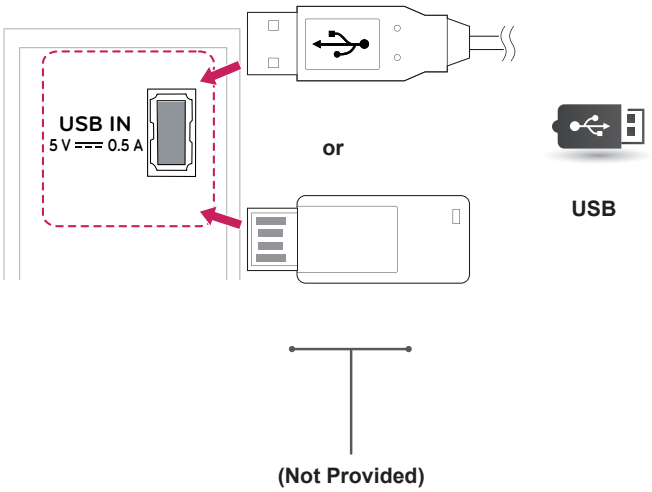

ENGLISH

Connecting to a PC

RGB connection

Transmits the analogue video signal from your PC to the TV. Connect the PC and the TV with the D-sub 15 pin cable as shown the following illustrations. To transmit an audio signal, connect an optional audio cable.

NOTE

If you do not use an optional external speaker, connect the PC to the TV with the optional audio cable.

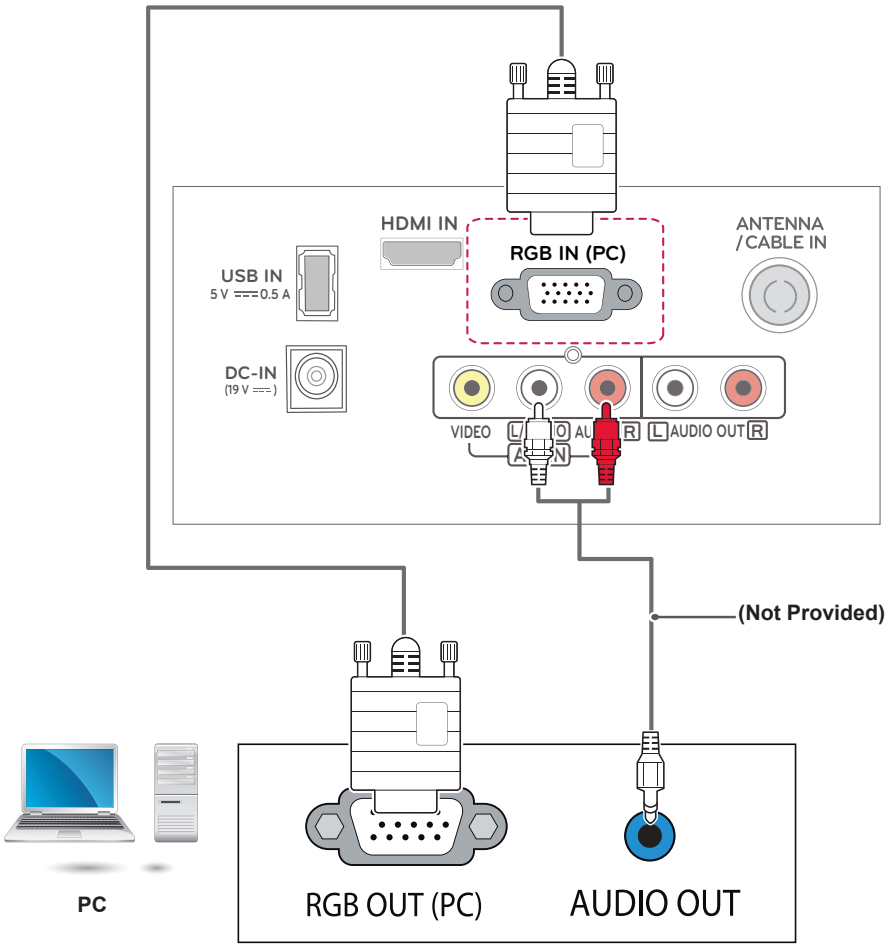

Audio System connection

Use an external audio system instead of the built-in speaker.

External Stereo Connection

Use to connect to an external amplifier, or surround sound system.

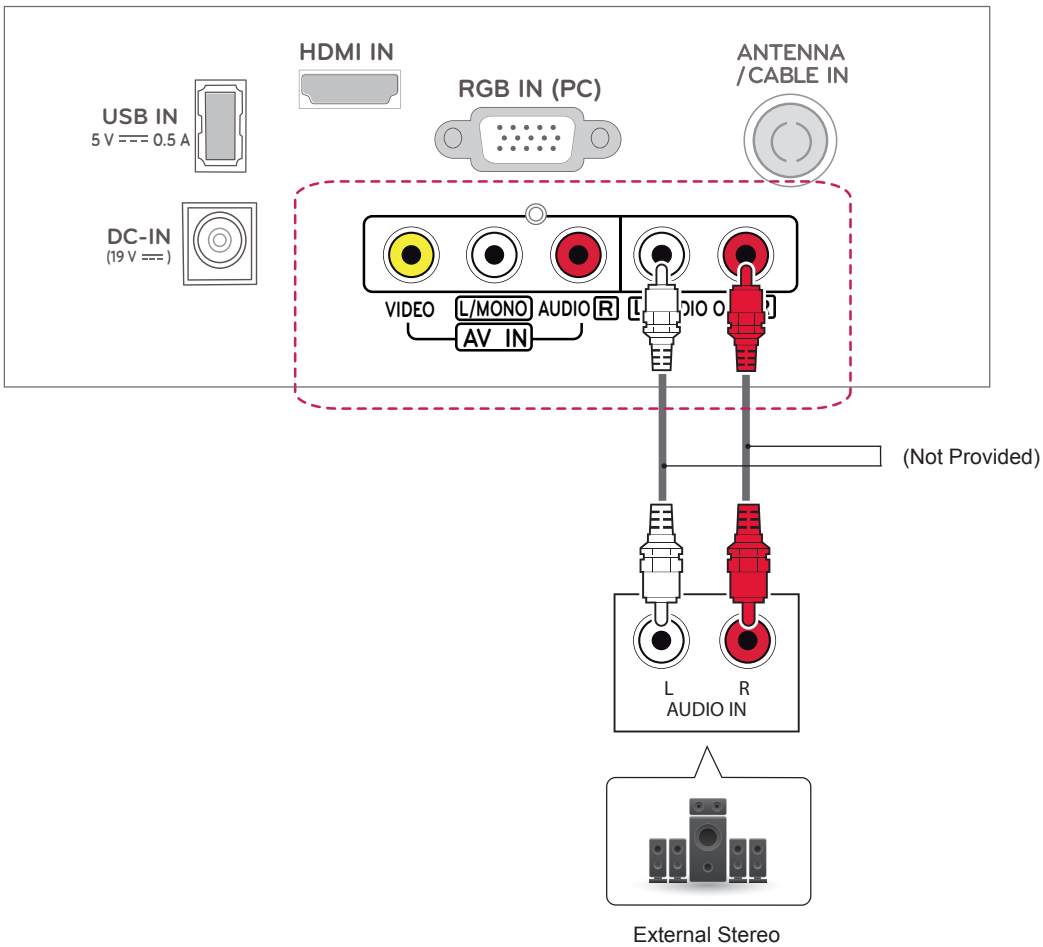

NOTE

- If you use an optional external audio device instead of the built-in speaker, set the TV speaker feature to off.

ENGLISH

REMOTE CONTROL

The descriptions in this manual are based on the buttons on the remote control.
Please read this manual carefully and use the TV correctly.
To replace batteries, open the battery cover, replace batteries (1.5 V AAA) matching the ⊕ and ⊖ ends to the label inside the compartment, and close the battery cover.
To remove the batteries, perform the installation actions in reverse.

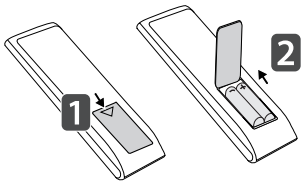

CAUTION

- Do not mix old and new batteries, as this may damage the remote control.
- In Analogue TV and some countries, some remote control buttons may not work.

Make sure to point the remote control toward the remote control sensor on the TV.

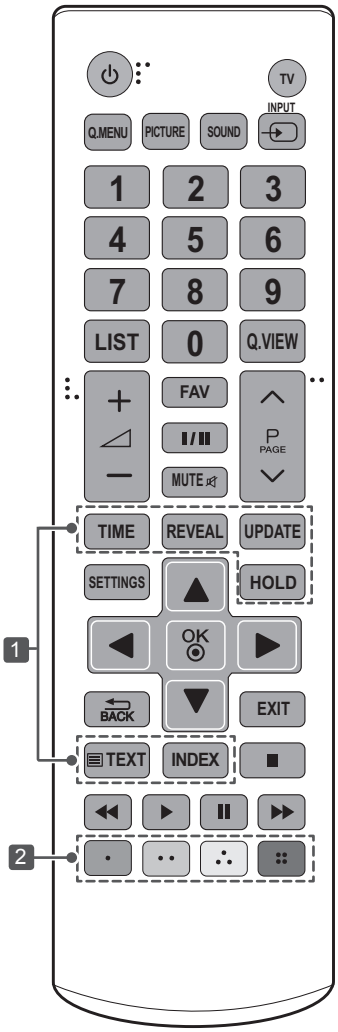

⏻(POWER)	Turns the TV on or off.
TV	Returns to the TV viewing from any mode.
Q.MENU	Accesses the Quick menus.
PICTURE	Changes the image mode.
SOUND	Changes the sound mode.
INPUT	Changes the input source.
Number buttons	Enters numbers.
LIST	Accesses the saved programme list.
Q.VIEW	Returns to the previously viewed programme.
FAV	Accesses your favourite programme list.
I/II	Selects the sound output.
MUTE	Mutes all sounds.
◿ + −	Adjusts the volume level.
P ∧ ∨	Scrolls through the saved programmes.
PAGE	Moves to the previous or next screen.
SETTINGS	Accesses the main menus.
Navigation buttons (up/down/left/right)	Scrolls through menus or options.
OK ◉	Selects menus or options and confirms your input.
⮌ BACK	Returns to the previous level.
EXIT	Clears on-screen displays and return to TV viewing.
1 TELETEXT buttons	These buttons are used for teletext.
Control buttons (■, ▶, II, ◀◀, ▶▶)	Controls the USB menus.
2 Coloured buttons	These access special functions in some menus. (• : Red, •• : Green, ∴ : Yellow, ⁞⁞ : Blue)

WATCHING TV

Turning the TV on for the first time

When you turn the TV on for the first time, the Initial setting screen appears. Select a language and customize the basic settings.

1 Connect the power cord to a power outlet. The Power indicator turns red and the TV switches to Standby mode.
2 In Standby mode, press the power button on the remote control or local key to turn the TV on. The Initial setting screen appears if you turn the TV on for the first time.

NOTE

- You can also access Initial Setting by accessing **OPTION** in the main menu.

3 Follow the on-screen instructions to customize your TV settings according to your preferences.

Menu Language	Selects a language to display.
⇩	
Mode Setting	Selects Home Use for the home environment.
⇩	
Time Setting	Sets the time.
⇩	
Auto Tuning	Scans and saves available programmes automatically.

NOTE

- To display images in the best quality for your home environment, select Home Use.
- Store Demo is suitable for the retail environment.
- If you select Store Demo, any customized settings will switch back to the default settings of Store Demo in 5 minutes.

4 When the basic settings are complete, press the **OK**.

NOTE

- If you do not complete the Initial setting, it will appear whenever the TV turns on.
- Disconnect the power cord from the power outlet when you do not use the TV for a long period of time.

5 To turn the TV off, press the power button on the remote control.

Watching TV

1 In Standby mode, press ⏻**(POWER)** to turn the TV on.
2 Press **INPUT** and select **TV**.
3 To turn the TV off, press ⏻**(POWER)**.
The TV switches to Standby mode.

Managing programmes

Automatically setting up programme

Use this to automatically find and store all available programmes.

1 Press **SETTINGS** and the Navigation buttons to scroll to **SETUP** and press **OK**.
2 Press the Navigation buttons to scroll to **Auto Tuning** and press **OK.**
3 Press the Navigation buttons to scroll to **To Start** and select **To Start** to begin auto tuning. The TV scans and saves available programmes automatically.
4 When you return to the previous menu, press ⮌ **BACK**.

ENGLISH

Manually setting up programme

Manual Tuning lets you manually tune and arrange the stations in whatever order you desire.

1 Press **SETTINGS** and the Navigation buttons to scroll to **SETUP**.
2 Press the Navigation buttons to scroll to **Manual Tuning**.
3 Press the Navigation buttons to scroll to **Storage**.
4 Press the Navigation buttons or Number buttons to select the desired programme number.
5 Press the Navigation buttons to scroll to **System**.
6 Press the Navigation buttons to scroll to **TV System**.
7 Press the Navigation buttons to scroll to **Band**.
8 Press the Navigation buttons to scroll to **V/UHF** or **Cable**.
9 Press the Navigation buttons to scroll to **Channel**.
1 0 Press the Navigation buttons and then select the desired channel number with the Navigation buttons or Number buttons.
1 1 Press the Navigation buttons to scroll to **Search**.
1 2 Press the Navigation buttons to scroll and start Searching**.**
1 3 Press the **OK** to store it.
1 4 When you return to the previous menu, press ⮌ BACK.

NOTE

- To store another programme, repeat steps 3 to 13.

Assigning a station name

You can assign a station name with five characters to each programme number.

1 Press **SETTINGS** and the Navigation buttons to scroll to **SETUP**.
2 Press the Navigation buttons to scroll to **Manual Tuning**.
3 Press the Navigation buttons to scroll to **Name**.
4 Press the Navigation buttons to scroll to select the position and make your choice of the second character, and so on. You can use an the alphabet A to Z, the number 0 to 9, +/ -, and blank and press **OK**.
5 Press the **OK** to store it.
6 When you return to the previous menu, press ⮌ BACK.

Fine Tuning

Normally fine tuning is only necessary if reception is poor.

1 Press **SETTINGS** and the Navigation buttons to scroll to **SETUP**.
2 Press the Navigation buttons to scroll to **Manual Tuning**.
3 Press the Navigation buttons to scroll to **Fine**.
4 Press the Navigation buttons to fine tune for the best picture and sound.
5 Press the **OK** to store it.
6 When you return to the previous menu, press ⮌ BACK.

Editing your programme list

When a programme number is skipped, it means that you will be unable to select it using **P** ∧ ∨ button during TV viewing.
If you wish to select the skipped programme, directly enter the programme number with the NUMBER buttons or select it in the Programme edit menu.
This function enables you to skip the stored programmes.

1 Press **SETTINGS** and the Navigation buttons to scroll to **SETUP**.
2 Press the Navigation buttons to scroll to **Programme Edit**.
3 Edit programmes using the following buttons.

Button	Description
Red button	Deletes a programme. Press the Red button twice. The selected programme is deleted, all the following programmes are shifted up one position.
Yellow button	Moves a programme. Press the Yellow button again to release this function.
Blue button	Selects a programme number to be skipped. Press the Blue button again to release the skipped programme.

4 When you return to the previous menu, press ⮌ BACK.

Selecting a programme on the programme list

1 Press **LIST** to access the programme list.
2 Press the Navigation buttons to select to desired programme and press **OK**.
3 When you return to the previous menu, press **LIST**.

NOTE

- You may find some blue programmes. They have been set up to be skipped by auto programming or in the programme edit mode.
- Some programmes with the programme number shown in the programme list indicate there is no station name assigned.

Using additional options

Adjusting aspect ratio

Resize an image to view at its optimal size by pressing **Q.MENU** or accessing Aspect Ratio in the **PICTURE** menu.

NOTE

- The available ratio varies depending on the input source.

- **16:9**: Resizes images to fit the screen width.

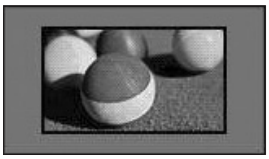

- **Just Scan**: Displays video images in the original size without removing parts of the edge of the image. (This function works in HDMI Mode (720P/1080i/1080p))

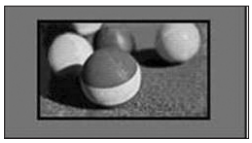

NOTE

- If you select **Just Scan**, you may see image noises at the edge of the original signal.

- **Original**: When your TV receives a wide screen signal it will automatically change to the picture format broadcasted.

ENGLISH

- **4:3**: Resizes images to the previous standard 4:3.

- **14:9** : You can view a picture format of 14:9 or a general TV programme in the 14:9 mode. The 14:9 screen is viewed in the same way as in 4:3, but is moved to the up and down.

- **Zoom** : Formats an image to fit the screen width. The top and bottom of the image may not appear.

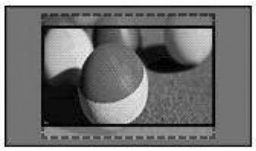

- **Cinema Zoom 1** : Formats an image to the cinemascope ratio, 2.35:1.
  To change the ratio of the cinema zoom, press < or > and its range is from 1 to 16.

NOTE

- If you enlarge or reduce an image, the image may be distorted.

Using the input list

Selecting an input source

1 Press **INPUT** to access the input sources.
  - The connected device displays on each input source.

2 Press the Navigation buttons or input button to scroll to one of the input sources and press **OK**.

- Image shown may differ from your TV.

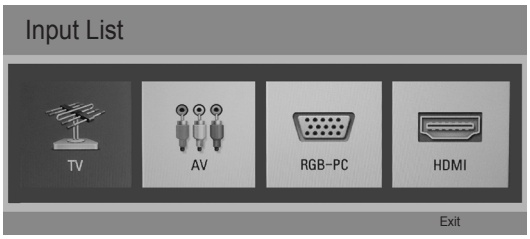

Input source	Description
TV	Watch TV over the air and cable broadcast.
AV	Watch video from a VCR or other external devices.
RGB-PC	View a PC display on the screen
HDMI	Watch video from a HTS or other high definition devices.

ENTERTAINMENT

(Depending on model)

- Image shown may differ from your TV.

Connecting USB storage devices

Connect USB storage devices (external HDD, USB memory) to the TV and use multimedia features. Connect a USB flash memory or USB memory card reader to the TV as shown on the following illustration.

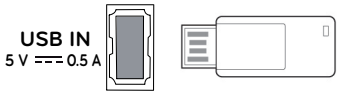

To disconnect a USB storage device,
make sure to end the connection properly to prevent damages to the TV or files.

1 Press **Q.MENU** to access the quick menus.
2 Press the Navigation buttons to scroll to **Eject** and press **OK**.
3 Disconnect the USB storage device only when the message says that it is safe to remove.

CAUTION

- Do not turn the TV off or remove a USB storage device while the USB storage device is connected to the TV, as this could result in loss of files or damage to the USB storage device.
- Back up your files saved on a USB storage device frequently, as you may lose or damage the files and this may be not covered by the manufacturer's warranty.

Tips for using USB storage devices

- Only a USB storage device is recognizable.
- If the USB storage device is connected through a USB hub, the device is not recognizable.
- A USB storage device using an automatic recognition programme may not be recognized.
- A USB storage device which uses its own driver may not be recognized.
- The recognition speed of a USB storage device may depend on each device.
- Please do not turn off the TV or unplug the USB device when the connected USB storage device is working. When such device is suddenly separated or unplugged, the stored files or the USB storage device may be damaged.
- Please do not connect the USB storage device which was artificially manoeuvred on the PC. The device may cause the product to malfunction or fail to be played. Never forget to use only a USB storage device which has normal music files, image files or movie files.
- Please use only a USB storage device which was formatted as a FAT16, FAT32, NTFS file system.
- Please connect a USB storage device with the cable offered by the device maker.
- Some USB storage devices may not be supported or operated smoothly.
- Be sure to back up important files since data stored in a USB memory device may be damaged. We will not be responsible for any data loss.
- If a USB memory device is connected to a USB multi-card reader, its volume data may not be detected.
- If the USB memory device does not work properly, disconnect and reconnect it.
- How fast a USB memory device is detected differs from device to device.
- The recommended capacity is 1 TB or less for a USB external hard disk and 32 GB or less for USB memory.
- Any device with more than the recommended capacity may not work properly.
- USB storage devices below USB 2.0 are supported as well. But they may not work properly in the movie list.
- Maximum of 999 folders or files can be recognized under one folder.
- If there are a lot of folders or files all within one folder, the device may not be able to access these properly.
- For external USB HDDs, it is recommended that you use devices with a rated voltage of less than 5 V and a rated current of less than 500 MA.

ENGLISH

Browsing files

Access the photo, music, or movie lists and browse files.

1 Connect a USB storage device.
2 Press **SETTINGS** to access the main menus.
3 Press the Navigation buttons to scroll to **USB** and press **OK**.
4 Press Navigation buttons to scroll to **PHOTO LIST**, **MUSIC LIST** or **MOVIE LIST** and press **OK**.

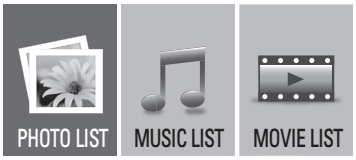

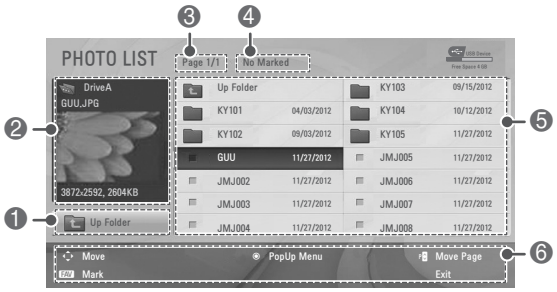

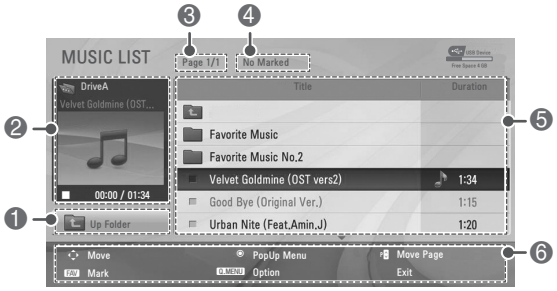

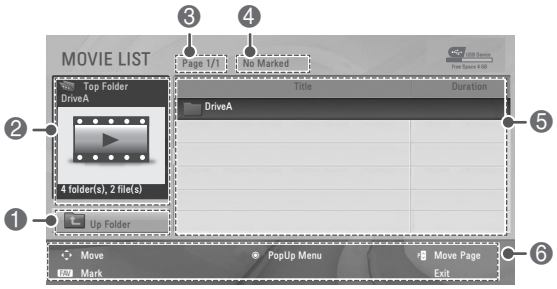

No.	Description
❶	Moves to the upper level folder.
❷	Preview: Displays the thumbnail/folder name of the file in the selected folder.
❸	Current page/Total pages
❹	Total number of marked files
❺	Contents under the folder focused on ❶
❻	Available buttons on the remote control

Supported file format

Type	Supported file format
Photo	JPEG Baseline : 64 x 64 to 8192 x 8192 Progressive : 64 x 64 to 1024 x 768 • You can play JPEG files only. • Non-supported files are displayed in the form of predefined icon.
Music	MP3 Bit rate 32kbps to 320kbps • Sampling rate MPEG1 Layer3 : 32 kHz, 44.1 kHz, 48 kHz • Sampling rate MPEG2 Layer3 : 16 kHz, 22.05 kHz, 24 kHz • Sampling rate MPEG2.5 Layer3 : 8 kHz, 11.025 kHz, 12 kHz
Movie	DAT,MPG,MPEG,VOB,AVI,DIVX,MP4,MKV, TS,TRP,TP,ASF,WMV,FLV,RM,RMVB **Movie**(*.mpg/*.mpeg/*dat/*.ts/*.trp/*.tp/*.vob/*.mp4/*.mov/*.mkv/*.divx/*.avi/*.asf/*.wmv/*.flv/*.avi(motion-jpeg)/*.mp4(motion-jpeg)/*.mkv(motion-jpeg)/*.rm/*.rmvb) supporting file **Video format** : DivX3.11, DivX4.12, DivX5.x, DivX6, Xvid1.00, Xvid1.01, Xvid1.02, Xvid1.03, Xvid1.10 beta-1/beta-2, Mpeg-1, Mpeg-2, Mpeg-4, H.264/AVC, VC1, JPEG, Sorenson H.263 **Audio format** : Dolby Digital, Mpeg, MP3, LPCM, ADPCM, WMA **Bit rate** : within 32 kbps to 320 kbps(MP3) **External Subtitle format** : *.smi/*.srt/*.sub (MicroDVD,Subviewer1.0/2.0)/*.ass/*.ssa/*.txt(TMPlayer)/*.psb(PowerDivX) **Internal Subtitle format** : only, XSUB (It is the subtitle format used in DivX6 files)

Viewing photos

View image files saved in a USB storage device. The displays on the screen may differ from the model.

1 Press **SETTINGS** to access the main menus.
2 Press the Navigation buttons to scroll to **USB** and press **OK**.
3 Press the Navigation buttons to scroll to **PHOTO LIST** and press **OK**.
4 Press the Navigation buttons to scroll to a folder/file you want and press **OK**.
5 View photos by using the following menus/buttons.

Button	Description
Navigation button	Scrolls through the files.
OK	Views the highlighted file or enters the mark mode.
P ∧ ∨	Moves to the previous or next page.
FAV	Enters the mark mode.
Menu	**Description**
View	Views the selected photo.
Mark All	Selects all files
Close	Exits the Mark Mode.

NOTE

- Non-supported files are displayed the preview image by icon only ⚠.
- Abnormal files are displayed in the form of bitmap ⊗.

6 The following options are available while viewing photos.

Option	Description
Slideshow	Starts or stops a slideshow with selected photos. If there are no selected photos, all photos saved in the current folder display during a slideshow. To set a slideshow speed, select Option.
BGM	Turns the background music on or off. To set the background music folder, select Option.
↻ (Rotate)	Rotates photos clockwise (90°, 180°, 270°, 360°). **NOTE** • The supported photo size is limited. You cannot rotate a photo if the resolution of the rotated width is larger than the supported resolution size.
Hide	Hides the option window. To display the options, press OK.

Q.MENU options for photo list

1 Press Q.MENU.
A pop-up window will appears.
2 Press the Navigation buttons to scroll to Set photo view. and press OK.
3 Press the Navigation buttons to scroll to one of the following options and press OK.

Set photo view.

Option	Description
Slide Speed	Selects a slideshow speed (Fast, Normal, Slow).
Music Folder	Selects a music folder for the background music.

ENGLISH

Set video.

Allows you to change Video presets.

Set audio.

Allows you to change Audio presets.

Listening to music

1 Press **SETTINGS** to access the main menus.
2 Press the Navigation buttons to scroll to **USB** and press **OK**.
3 Press the Navigation buttons to scroll to **MUSIC LIST** and press **OK**.
4 Press the Navigation buttons to scroll to a folder/file you want and press **OK**.
5 Play music by using the following menus/buttons.

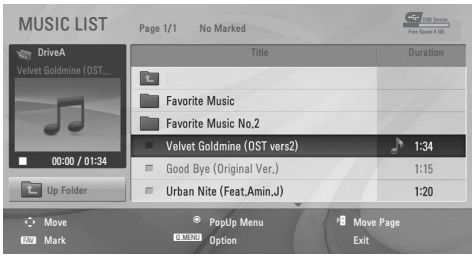

Button	Description
Navigation button	Scrolls through the files.
OK	Views the highlighted file or enters the mark mode.
P ∧ ∨	Moves to the previous or next page.
FAV	Enters the mark mode.
Menu	**Description**
Play	Plays the selected music file.
Play with Photo	Displays photos during playback.
Mark All	Selects all files.
Close	Exits the Mark Mode.

6 Control playback by using the following buttons.

Button	Description
■	Stops playback
▶	Plays a music file
❚❚	Pauses or resumes playback
▶▶	Skips to the next file
◀◀	Skips to the previous file
◀◀ or ▶▶	When playing, When you press the ◀◀ button, the previous music file will be played. When you press the ▶▶ button, the next music file will be played.
EXIT	When you press the **EXIT** button, only the music will be stopped and the player will go to TV viewing.
∧ or ∨	When using the ∧or∨ button during playback a cursor indicating the position can be played.

Q.MENU options for music list

1 Press **Q.MENU**.
A pop-up window will appears.
2 Press the Navigation buttons to scroll to music list option and press **OK**.
3 Press the Navigation buttons to scroll to one of the following options and press **OK**.

Set audio.

Allows you to change Audio presets.

NOTE

- The TV will not play copy protected files.
- If the TV is not in use for some time during playback, the information box as a screensaver will appear to prevent image burn.
  To return to the Music list screen, press **OK** or ↩ **BACK**.

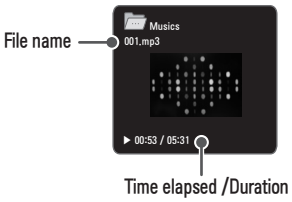

Viewing movies

1 Press **SETTINGS** to access the main menus.
2 Press the Navigation buttons to scroll to **USB** and press **OK**.
3 Press the Navigation buttons to scroll to **MOVIE LIST** and press **OK**.
4 Press the Navigation buttons to scroll to a folder/file you want and press **OK**.
5 Play movie by using the following menus/buttons.

Button	Description
Navigation button	Scrolls through the files.
OK	Views the highlighted file or enters the mark mode.
P ∧ ∨	Moves to the previous or next page.
FAV	Enters the mark mode.
Menu	**Description**
Play	Play the selected movie file. Once a movie file finishes playing, the next selected one will be played automatically.
Mark All	Mark all movie files on the screen.
Close	Exit the Mark Mode.

6 Control playback by using the following buttons.

Button	Description
■	Stops the playback
▶	Plays a video
❚❚	Pauses or resumes the playback
◀◀	Scans backward in a file
▶▶	Scans forward in a file
Q.MENU	Show the **Option** menu.
BACK	Hide the menu on the full-sized screen.
EXIT	Return to normal TV viewing.
< >	Skips to specific points in a file during playback. The time of a specific point will appear on the status bar. In some files, this function may not work properly.

Tips for using playing video files

- Some user-created subtitles may not work properly.
- Some special characters are not supported in subtitles.
- HTML tags are not supported in subtitles.
- Subtitles in languages other than the supported languages are not available.
- Changing font and colour in subtitles is not supported.
- Subtitles in languages other than one specified are not supported.
- Video files with subtitle files of 1 MB or larger may not be played properly.
- The screen may suffer temporary interruptions (image stoppage, faster playback, etc.) when the audio language is changed.
- A damaged movie file may not be played correctly, or some player functions may not be usable.
- Movie files produced with some encoders may not be played correctly.
- If the video and audio structure of recorded file is not interleaved, either video or audio is outputted.
- HD videos with a maximum of 1920x1080@25/30P or 1280x720@50/60P are supported, depending on the frame.
- Videos with resolutions higher than 1920X1080@25/30P or 1280x720@50/60P may not work properly depending on the frame.
- Movie files other than the specified types and formats may not work properly.
- Max bitrate of playable movie file is 20 Mbps. (only, Motion JPEG : 10 Mbps)

- We do not guarantee smooth playback of profiles encoded level 4.1 or higher in H.264/AVC.
- DTS Audio codec is not supported.
- A movie file more than 30 GB in file size is not supported for playback. The file size limit is dependent on the encoding environment.
- A DivX movie file and its subtitle file must be located in the same folder.
- A video file name and its subtitle file name must be identical for it to be displayed.
- Playing a video via a USB connection that doesn't support high speed may not work properly.
- Files encoded with GMC(Global Motion Compensation) and Qpel (Quarterpel Motion Estimation) may not be played.
- Trick Mode does not support other functions than if video files do not have index information.
- Video file names that contain special characters may not be playable.

Video options

1 Press **Q. MENU** to access the **Pop-Up** menus.

2 Press the Navigation buttons to scroll to Set Video Play, Set Video or Set Audio and press **OK**.

When you select the **Set Video Play**

1 Press the Navigation buttons to scroll to show the **Picture Size**, **Audio Language**, **Subtitle**.
2 Press the Navigation buttons to scroll to make appropriate adjustments.

Menu	Description
Picture Size	Selects your desired picture format during movie play.
Audio Language	Changes the Language Group of the audio during movie play. Files with a single audio track cannot be selected.
Subtitle	Turn on/off the subtitle.
Language	Activated for SMI subtitle and can select the language within the subtitle.
Code Page	Can select the font for subtitle. When set to default, same font as general menu will be used.
Sync	Adjusts the time synchronisation of the subtitle from -10 secs to +10 secs by steps of 0.5 secs during movie play.

Code Page	Support Language
Latin1	English, French, Spanish, Portuguese, Malaysia, Indonesia
Cyrillic	Russian
Thai	Thai
Hebrew	Hebrew
Arabic	Arab, Parsi, Krudish
Vietnam	Vietnamese language

NOTE

- Only 10,000 of sync blocks can be supported within the subtitle file.
- When playing a video, you can adjust the Picture Size by pressing **Q.MENU** or accessing Aspect Ratio in the **PICTURE** menu.

When you select the **Set video,**

1 Press the Navigation buttons to scroll to make appropriate adjustments.

When you select the **Set audio**,

1 Press the Navigation buttons to scroll to show the **Sound Mode**, **Auto Volume**, **Balance**.
2 Press the Navigation buttons to scroll to make appropriate adjustments.

DivX® VOD Guide

DivX® VOD Registration

In order to play purchased or rented DivX® VOD contents, you should register your device with 10 digit DivX registration code from your device at www.divx.com/vod.

1 Press **SETTINGS** to access the main menus.
2 Press the Navigation buttons to scroll to **USB** and press **OK**.
3 Press the Navigation buttons to scroll to **DivX(R) VOD** and press **OK**.
4 Press the Navigation buttons to scroll to **Registration** and press **OK** .
5 View the registration code of your TV.

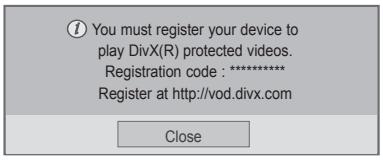

6 When you are finished, press **EXIT**. When you return to the previous menu, press ⮌ BACK.

NOTE

- Movie files are supported as follows
- **Resolution** : under 720x480, 720x576 WxH pixels
- **Frame rate** : under 30 frames/sec(720x480), under 25 frames/sec(under 720x576)
- Video Codec : MPEG 1, MPEG 2, MPEG 4, H.264/AVC, DivX 3.11, DivX 4.12, DivX 5.x, DivX 6, Xvid 1.00, Xvid 1.01, Xvid 1.02, Xvid 1.03, Xvid 1.10-beta1, Xvid 1.10-beta2, JPEG, VC1, Sorenson H.263/H.264.

DivX® VOD Deregistration

You should deregister your device with 8 digit DivX deregistration code from your device at www.divx.com/vod.

NOTE

- Once the deregistration is executed, you must register your device again to see DivX® VOD contents.

1 Press **SETTINGS** to access the main menus.
2 Press the Navigation buttons to scroll to **USB** and press **OK**.
3 Press the Navigation buttons to scroll to **DivX(R) VOD** and press **OK**.
4 Press the Navigation buttons to scroll to **Deregistration** and press **OK**.
5 Press the Navigation buttons to select **Yes** to confirm.

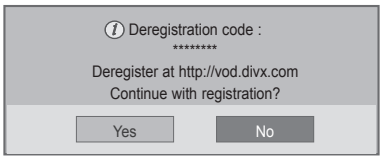

6 When you are finished, press **EXIT**. When you return to the previous menu, press ⮌ BACK.

ENGLISH

CUSTOMIZING TV SETTING

- Image shown may differ from your TV.

Accessing main menus

1 Press **SETTINGS** to access the main menus.
2 Press the Navigation buttons to scroll to one of the following menus and press **OK**.
3 Press Navigation buttons to scroll to the setting or option you want and press **OK**.
4 When you are finished, press **EXIT**.

Menu		Description
	SETUP	Sets up and edit programmes.
	PICTURE	Adjusts the image size, quality, or effect.
	AUDIO	Adjusts the sound quality, effect, or volume level.
	TIME	Sets the time, date, or timer feature.
	OPTION	Customizes the general settings.
	LOCK	Locks or unlocks programmes.
	INPUT	Views the input sources with their labels
	USB	Displays photo and play music, movie content stored on your USB.

Customizing Settings

SETUP Settings

1 Press **SETTINGS** and the Navigation buttons to scroll to **SETUP**.
2 Press the Navigation buttons to scroll to the setting or option you want and press **OK**.
3 When you return to the previous menu, press ⮌ BACK.

- Image shown may differ from your. TV.

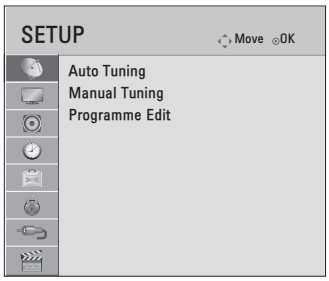

The available programme settings are described in the following:

Setting	Description
Auto Tuning	Tunes and stores all available programmes through antennas inputs.
Manual Tuning	Tunes and stores the programmes you want manually.
Programme Edit	Edits programmes.

PICTURE Settings

1 Press **SETTINGS** and the Navigation buttons to scroll to **PICTURE**.
2 Press the Navigation buttons to scroll to the setting or option you want and press **OK**.
3 When you return to the previous menu, press ⮌ BACK.

- Image shown may differ from your TV.

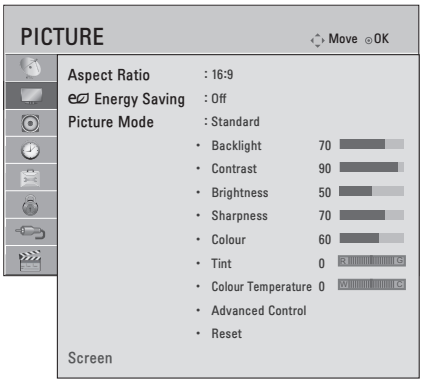

The available picture settings are described in the following.

Setting	Description	
Aspect Ratio	Changes the image size to view images at its optimal size.	
Energy Saving	Reduces the power consumption by adjusting the screen brightness.	
	Option	
	Off	The **Energy Saving** is off
	Minimum/ Medium/ Maximum	Selects the brightness level.
	Screen off	The screen turns off in 3 seconds.
	NOTE • When you select **Screen Off**, the screen will be turned off in 3 seconds and **Screen Off** will start. • If you adjust “Energy Saving- Maximum”, Backlight feature will not work.	

Setting	Description	
Picture Mode	Selects one of the preset image or customizes options in each mode for the best TV screen performance. You are also able to customize advanced options of each mode.	
	Mode	
	Vivid	Adjusts the video image for the retail environment by enhancing the contrast, brightness, colour, and sharpness.
	Standard	Adjusts the image for the normal environment.
	Cinema	Optimizes the video images for a cinematic look to enjoy movies as if you are in a movie theatre.
	Sport	Optimizes the video image for high and dynamic actions by emphasizing primary colours such as white, grass, or sky blue.
	Game	Optimizes the video image for a fast gaming screen such as PCs or games.
Screen	Customizes the PC display options in RGB mode.	
	Option	
	Resolution	Sets the desired resolution. Options may only be selected when the PC resolution is set to 1024x768@60/ 1280x768@60/1360x 768@60/1366x768@ 60(default).
	Auto config.	Sets to adjust the screen position, clock, and phase automatically. The displayed image may be unstable for a few seconds while the configuration is in progress.
	Position/ Size/Phase	Adjusts the options when the picture is not clear, especially when characters are shaky, after the auto configuration.
	Reset	Restores the options to the default setting.

ENGLISH

Basic image options

Setting	Description
Backlight	Adjusts the brightness of the screen by controlling the LCD backlight. If you decrease the brightness level, the screen becomes darker and the power consumption will be reduced without any video signal loss.
Contrast	Increases or decreases the gradient of the video signal. You may use **Contrast** when the bright part of the picture is saturated.
Brightness	Adjusts the base level of the signal in the picture.
Sharpness	Adjusts the level of crispness in the edges between the light and dark areas of the picture. The lower the level, the softer the image.
Colour	Adjusts intensity of all colours.
Tint	Adjusts the balance between red and green levels.
Colour Temperature	Choose one of three automatic colour adjustments. Set to warm to enhance hotter colours such as red, or set to cool to see less intense colours with more blue. You can control red, green, blue to adjust colour details.
Advanced Control	Customizes the advanced options.
Reset	Restores the options of each mode to the factory default.

Advanced image options (Depending on model)

Setting	Description
Dynamic Contrast	Adjusts the contrast to keep it at the best level according to the brightness of the screen. The picture is improved by making bright parts brighter and dark parts darker.
Dynamic Colour	Adjusts screen colours so that they look livelier, richer and clearer. This feature enhances hue, saturation and luminance so that red, blue and green white look more vivid.
Noise Reduction	Reduces screen noise without compromising video quality.
Gamma	You can adjust brightness of dark area and middle gray level area of the picture. » Low: Make the dark and middle gray level areas brighter. » Medium: Express the original picture level. » High: Make the dark and middle gray level area darker.
Black Level	Sets black level of the screen to proper level. This function is available in the following modes: RF, AV or HDMI. » Low: The reflection of the screen gets darker. » High: The reflection of the screen gets brighter.
Motion Eye Care	Adjusts screen brightness to prevent eye glare.
Film Mode	Makes video clips recorded in film look more natural. This feature operates only in 480i / 576i / 1080i / 1080p(24Hz) Resolution.
Colour Gamut	**Advanced Control** Maximizes the utilization of colour to increase colour quality. Standard: Displays standard set of colours. Wide: Increase number of colours used.
Edge Enhancer	Shows clearer and distinctive yet natural edges of the video.

NOTE

Depending on input signal or other picture settings, the range of detailed items for adjustment may differ.

AUDIO Settings

1 Press **SETTINGS** and the Navigation buttons to scroll to **AUDIO**.
2 Press the Navigation buttons to scroll to the setting or option you want and press **OK**.
3 When you return to the previous menu, press ⮌ BACK.

- Image shown may differ from your TV.

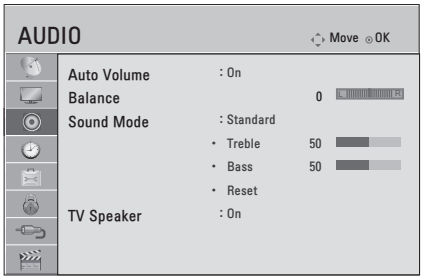

The available audio settings are described in the following.

Setting	Description
Auto Volume	Activates the Auto Volume feature to keep the volume level consistent whenever you change programmes. The volume level may not be consistent due to different signal conditions of broadcasting stations.
Balance	Adjust balance between the left and right speakers according to your room environment.

Setting	Description	
Sound Mode	Selects one of the preset sound modes or customizes options in each mode.	
	Mode	
	Standard	Select when you want standard-quality sound.
	Music	Select when you listen to music.
	Cinema	Select when you watch movies.
	Sport	Select when you watch sports events.
	Game	Select when you play games.
	Option	
	Treble	Controls the dominant sounds in the output. When you turn up the treble, it will increase the output to the higher frequency range.
	Bass	Controls the softer sounds in the output. When you turn up the bass, it will increase the output to the lower frequency range.
	Reset	Resets the sound mode to the default setting.
TV Speaker	Turns off the internal speaker of the TV when using an external Hi-Fi system.	

This feature may not be applied based on country broadcasting circumstance.

Stereo/Dual Reception

When a programme is selected, the sound information for the station appears with the programme number and station name.

Press **I/II button to select the Multi Audio menu.**

Broadcast	On Screen Display
Mono **Stereo** **Dual**	MONO STEREO DUAL I , DUAL II , DUAL I + II
NICAM	NICAM

ENGLISH

- **Mono sound selection**
  If the stereo signal is weak in stereo reception, you can switch to mono. In mono reception, the clarity of sound is improved.

- **Language selection for dual language broadcast**
  If a programme can be received in two languages (dual language), you can switch to DUAL I, DUAL II or DUAL I+II.

DUAL I	Sends the primary broadcast language to the loudspeakers.
DUAL I I	Sends the secondary broadcast language to the loudspeakers.
DUAL I+I I	Sends a separate language to each loudspeaker.

Nicam Reception

If the TV is equipped with a receiver for NICAM reception, high quality NICAM (Near Instantaneous Companding Audio Multiplex) digital sound can be received.
Sound output can be selected according to the type of broadcast received.

1 When **NICAM** mono is received, you can select **NICAM MONO** or **FM MONO**.
2 When **NICAM** stereo is received, you can select **NICAM STEREO** or **FM MONO**.
If the stereo signal is weak, switch to **FM MONO**.
3 When **NICAM** dual is received, you can select **NICAM DUAL I**, **NICAM DUAL II** or **NICAM DUAL I+II** or **FM MONO**.

Speaker Sound Output Selection

In AV, RGB-PC, HDMI mode, you can select output sound for the left and right loudspeakers.
Select the sound output.

L+R:	Audio signal from audio L input is sent to the left loudspeaker and audio signal from audio R input is sent to the right loudspeaker.
L+L:	Audio signal from audio L input is sent to left and right loudspeakers.
R+R:	Audio signal from audio R input is sent to left and right loudspeakers.

TIME Settings

1 Press **SETTINGS** and the Navigation buttons to scroll to **TIME**.
2 Press the Navigation buttons to scroll to the setting or option you want and press **OK**.
3 When you return to the previous menu, press ⮌ BACK.

- Image shown may differ from your TV.

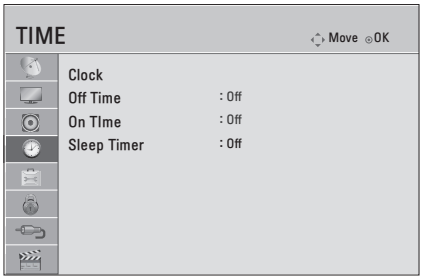

The available audio settings are described in the following.

Setting	Description
Clock	Sets the time.
Off Time/On Time	Sets the time to turn on or off the TV automatically. To use this function, you should set the current time and date in advance. **NOTE** • If you do not press any button within 2 hours after the TV turns on by the On Time feature, the TV enters the Standby mode automatically. • If you set both Off time and On time features to the same time, the Off time feature overrides the On time feature.
Sleep Timer	Sets the length of time until the TV to turns off. When you turn the TV off and turn it on again, the Sleep timer feature will be set to off.

OPTION Settings

1 Press **SETTINGS** and the Navigation buttons to scroll to **OPTION**.
2 Press the Navigation buttons to scroll to the setting or option you want and press **OK**.
3 When you return to the previous menu, press ⮌ BACK.

- Image shown may differ from your TV.

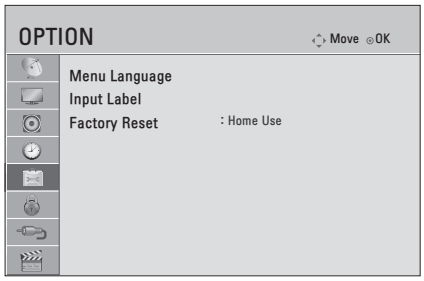

The available audio settings are described in the following.

Setting	Description	
Menu Language	Selects a desired language.	
Input Label	Indicates which device is connected to which input port.	
Factory Reset	Customizes the TV settings to suit your preference. The initial setup screen will appear when you turn on the TV for the first time.	
	Home Use	Selects it for the Home environment.
	Store Demo	Selects it for the retail environment.

LOCK Settings

1 Press **SETTINGS** and the Navigation buttons to scroll to **LOCK**.
2 Press the Navigation buttons to scroll to the setting or option you want and press **OK**.
3 When you return to the previous menu, press ⮌ BACK.

- Image shown may differ from your TV.

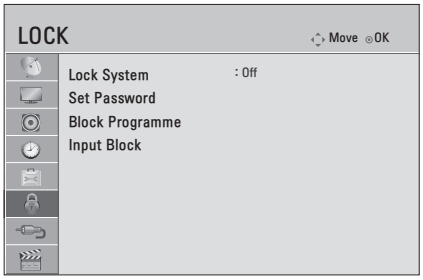

The available audio settings are described in the following.

Setting	Description
Lock System	Activates or deactivates the lock system.
Set Password	Changes the 4-digit password. The default PIN is “0 0 0 0”.
Block Programme	Blocks the programmes that contain inappropriate contents for children by pressing the Blue button. The Lock icon appears in front of the blocked programmes. The programmes can be selected but the screen blank and the audio is muted.
Input Block	Blocks the input sources.

ENGLISH

TELETEXT

- This feature is not available in all countries.

Teletext is a free service broadcast by most TV stations which gives up-to-the minute information on news, weather, television programmes, share prices and many other topics.

The teletext decoder of this TV can support the SIMPLE and FASTEXT systems. SIMPLE (standard teletext) consists of a number of pages which are selected by directly entering the corresponding page number. FASTEXT are more modern methods allowing quick and easy selection of teletext information.
Teletext Service - only via Digital Tuner access where TV broadcast available.

Switch On/Off

Press the **TEXT** button to switch to teletext. The initial page or last page viewed appears on the screen.
Two page numbers, TV station name, date and time are displayed on the screen headline. The first page number indicates your selection, while the second shows the current page displayed.
Press the **TEXT** button to switch off teletext. The previous mode reappears.

Simple Text

Page selection

1 Enter the desired page number as a three digit number with the **NUMBER** buttons. If during selection you press a wrong number, you must complete the three digit number and then re-enter the correct page number.
2 The **P** ∧∨ button can be used to select the preceding or following page.

Programming a colour button in LIST mode

If the TV is in SIMPLE text or FASTEXT mode, press the **INDEX** button to switch to **LIST** mode. Four teletext page numbers of your choice can be colour coded and easily selected by pressing the corresponding coloured button on the remote control handset.

1 Press a coloured button.
2 Using the Number buttons, select the page you wish to programme.
3 Press the **OK** button. The selected page is stored as the selected page number, blinking once to confirm this. From now on, you can select this page with the same coloured button.
4 The three other coloured buttons are programmed in this way.

Fastext

The teletext pages are colour coded along the bottom of the screen and are selected by pressing the corresponding coloured button.

Page selection

1 Press the **INDEX** button to select the index page.
2 You can select the pages which are colour coded along the bottom line with corresponding coloured buttons.
3 AS with SIMPLE teletext mode, you can select a page by entering its three digit page number with the Number buttons in FASTEXT mode.
4 The **P** ∧∨ button can be used to select the preceding or following page.

Special Teletext Function

Index

Select the each index page.

Time

When viewing a TV programme, select this menu to display the time at the top right hand corner of the screen.
In the teletext mode, press this button to select a sub page number. The sub page number is displayed at the bottom of the screen. To hold or change the sub page, press the Red/Green, ∧∨ or **NUMBER** buttons.

Hold

Stops the automatic page change which will occur if a teletext page consists of 2 or more sub pages.
The number of sub pages and the sub page displayed is, usually, shown on the screen below the time.
When this menu is selected the stop symbol is displayed at the top left-hand corner of the screen and the automatic page change is inactive.

Reveal

Select this menu to display concealed information, such as solutions to riddles or puzzles.

Update

Displays the TV picture on the screen while waiting for a new teletext page. The display will appear at the top left hand corner of the screen. When the updated page is available then display will change to the page number. Select this menu again to view the updated teletext page.

MAINTENANCE

Cleaning Your TV

Clean your TV regularly to keep the best performance and to extend the product lifespan.

CAUTION

- Make sure to turn the power off and disconnect the power cord and all other cables first.
- When the TV is left unattended and unused for a long time, disconnect the power cord from the wall outlet to prevent possible damage from lightning or power surges.

Screen and frame

To remove dust, wipe the surface with a dry and soft cloth.
To remove major dirt, wipe the surface with a soft cloth dampened in clean water or a diluted mild detergent. Then wipe immediately with a clean and dry cloth.

CAUTION

- Do not push, rub, or hit the surface with your fingernail or a sharp object, as this may result in scratches on the screen and image distortions.
- Do not use any chemicals, such as waxes, benzene, alcohol, thinners, insecticides, air fresheners, lubricants, as these may damage the screen's finish and cause discolorations.

Cabinet and stand

To remove dust, wipe the cabinet with a dry and soft cloth.
To remove major dirt, wipe the cabinet with a soft cloth dampened in a clean water or water containing a small amount of mild detergent.

CAUTION

- Do not spray liquid onto the surface. If water enters the TV, it may result in fire, electric shock, or malfunction.
- Do not use any chemicals as this may deteriorate the surface.

Power cord

Remove the accumulated dust or dirt on the power cord regularly.

TROUBLESHOOTING

General

Problem	Resolution
Cannot control the TV with the remote control.	• Check the remote control sensor on the product and try again. • Check if there is any obstacle between the product and the remote control. • Check if the batteries are still working and properly installed (⊕ to ⊕, ⊖ to ⊖).
No image display and no sound is produced.	• Check if the product is turned on. • Check if the power cord is connected to a wall outlet. • Check if there is a problem in the wall outlet by connecting other products.
The TV turns off suddenly.	• Check the power control settings. The power supply may be interrupted. • Check if the Auto sleep / Off time feature is activated in the Time settings. • If there is no signal while the TV is on, the TV will turn off automatically after 15 minutes of inactivity.

SPECIFICATIONS

22MA33A

Panel	Screen Type	550 mm Wide (22 inch) Visible diagonal size : 550 mm
	Pixel Pitch	349.5 um (H) x 349.5 um (V)
Video Signal	Max. Resolution	1366 × 768 @ 60 Hz
	Recommended Resolution	1366 × 768 @ 60 Hz
	Horizontal Frequency	30 kHz to 69 kHz
	Vertical Frequency	56 Hz to 61 Hz
	Synchronization Type	Separate Sync, Digital
Input Connector		TV, D-Sub Analogue, CVBS, HDMI, USB
Speaker Out		5 W x 2
Power	Rated Voltage	19 V ⎓ 1.6 A
	Power Consumption	On Mode : 27 W (typ.) Off Mode : ≤ 0.5 W
Dimensions (Width x Depth x Height) Weight		With Stand
		512.6 mm x 140.1 mm x 363.4 mm 3.2 kg
		Without Stand
		512.6 mm x 63.1 mm x 315.6 mm 3.0 kg
Environmental conditions	Operating Temperature Operating Humidity	10 °C to 35 °C 20 % to 80 %
	Storage Temperature Storage Humidity	-10 °C to 60 °C 5 % to 90 %

Product specifications shown above may be changed without prior notice due to upgrade of product functions.

24MN33A

Panel	Screen Type	600 mm Wide (24 inch) Visible diagonal size : 600 mm
	Pixel Pitch	381.75 um (H) x 381.75 um (V)
Video Signal	Max. Resolution	1366 × 768 @ 60 Hz
	Recommended Resolution	1366 × 768 @ 60 Hz
	Horizontal Frequency	30 kHz to 69 kHz
	Vertical Frequency	56 Hz to 61 Hz
	Synchronization Type	Separate Sync, Digital
Input Connector		TV, D-Sub Analogue, CVBS, HDMI, USB
Speaker Out		5 W x 2
Power	Rated Voltage	19 V ⎓ 1.6 A
	Power Consumption	On Mode 30 W (typ.) Off Mode : ≤ 0.5 W
Dimensions (Width x Depth x Height) Weight		With Stand
		556.5 mm x 140.1 mm x 391 mm 3.7 kg
		Without Stand
		556.5 mm x 62.3 mm x 343.1 mm 3.5 kg
Environmental conditions	Operating Temperature Operating Humidity	10 °C to 35 °C 20 % to 80 %
	Storage Temperature Storage Humidity	-10 °C to 60 °C 5 % to 90 %

Product specifications shown above may be changed without prior notice due to upgrade of product functions.

26MA33A

Panel	Screen Type	660 mm Wide (26 inch) Visible diagonal size : 660 mm
	Pixel Pitch	0.4215 mm (H) x 0.4215 mm (V)
Video Signal	Max. Resolution	1366 × 768 @ 60 Hz
	Recommended Resolution	1366 × 768 @ 60 Hz
	Horizontal Frequency	30 kHz to 69 kHz
	Vertical Frequency	56 Hz to 61 Hz
	Synchronization Type	Separate Sync, Digital
Input Connector		TV, D-Sub analogue, CVBS, HDMI, USB
Speaker Out		5 W x 2
Power	Rated Voltage	19 V ⎓ 2.0 A
	Power Consumption	On Mode 35 W (typ.) Off Mode : ≤ 0.5 W
Dimensions (Width x Depth x Height) Weight		With Stand
		620.4 mm x 162.1 mm x 432.2 mm 4.2 kg
		Without Stand
		620.4 mm x 58.8 mm x 380.5 mm 3.9 kg
Environmental conditions	Operating Temperature Operating Humidity	10 °C to 35 °C 20 % to 80 %
	Storage Temperature Storage Humidity	-10 °C to 60 °C 5 % to 90 %

Product specifications shown above may be changed without prior notice due to upgrade of product functions.

ENGLISH

29MN33A

Panel	Screen Type	720 mm Wide (29 inch) Visible diagonal size : 720 mm
	Pixel Pitch	154 um (H) x 462 um (V)
Video Signal	Max. Resolution	1366 × 768 @ 60 Hz
	Recommended Resolution	1366 × 768 @ 60 Hz
	Horizontal Frequency	30 kHz to 69 kHz
	Vertical Frequency	56 Hz to 61 Hz
	Synchronization Type	Separate Sync, Digital
Input Connector		TV, D-Sub Analogue, CVBS, HDMI, USB
Speaker Out		5 W x 2
Power	Rated Voltage	19 V ⎓ 2.4 A
	Power Consumption	On Mode : 40 W (typ.) Off Mode : ≤ 0.5 W
Dimensions (Width x Depth x Height) Weight		With Stand
		668.6 mm x 182.1 mm x 457 mm 5.7 kg
		Without Stand
		668.6 mm x 81.9 mm x 405.5 mm 5.4 kg
Environmental conditions	Operating Temperature Operating Humidity	10 °C to 35 °C 20 % to 80 %
	Storage Temperature Storage Humidity	-10 °C to 60 °C 5 % to 90 %

Product specifications shown above may be changed without prior notice due to upgrade of product functions.

	AC/DC Adapter	
	Manufacturer	**Model**
22MA33A 24MN33A	Lien Chang	LCAP16A-E LCAP16A-A LCAP25A LCAP25B
	Honor	ADS-40SG-19-2 19032G ADS-40FSG-19 19032GPG ADS-40FSG-19 19032GPCU
	APD	DA-32B19
26MA33A	Lien Chang	LCAP16B-E LCAP16B-A LCAP25B
	LG Innotek	PSAB-L205B PSAB-L205C PSAB-L204B
	APD	DA-40E19
29MN33A	LG Innotek	PSAB-L101A
	Lite-On	PA-1650-64

		Analogue TV
New Zealand, Singapore	Television System	PAL/SECAM-B/G/D/K, PAL-I
	Programme Coverage	BG : VHF/UHF 1 to 69, CATV 01 to 47 I : VHF/UHF 1 to 69, CATV 01 to 47 DK : VHF/UHF 1 to 69, CATV 01 to 47
Australia	Television System	PAL B/B
	Programme Coverage	B/B : VHF/UHF 0 to 75, CATV : 2 to 44
Indonesia, Israel, Myanmar, Sri Lanka	Television System	PAL/SECAM-B/G/D/K, PAL-I, NTSC-M
	Programme Coverage	BG : VHF/UHF 1 to 69, CATV 01 to 47 I : VHF/UHF 1 to 69, CATV 01 to 47 DK : VHF/UHF 1 to 69, CATV 01 to 47 M : VHF/UHF 2 to 78, CATV 01 to 71
Vietnam, Malaysia	Television System	PAL/SECAM-B/G/D/K, PAL-I, NTSC-M
	Programme Coverage	BG : VHF/UHF 1 to 69, CATV 01 to 47 I : VHF/UHF 1 to 69, CATV 01 to 47 DK : VHF/UHF 1 to 69, CATV 01 to 47 M : VHF/UHF 2 to 78, CATV 01 to 71
Iran, Algeria, Tunisia, Digital model	Television System	PAL/SECAM-B/G/D/K, PAL-I, NTSC-M
	Programme Coverage	BG : VHF/UHF 1 to 69, CATV 01 to 47 I : VHF/UHF 1 to 69, CATV 01 to 47 DK : VHF/UHF 1 to 69, CATV 01 to 47 M : VHF/UHF 2 to 78, CATV 01 to 71
Analogue model, India, Thailand, South Africa, --	Television System	PAL/SECAM-B/G/D/K, PAL-I, NTSC-M
	Programme Coverage	BG : VHF/UHF 1 to 69, CATV 01 to 47 I : VHF/UHF 1 to 69, CATV 01 to 47 DK : VHF/UHF 1 to 69, CATV 01 to 47 M : VHF/UHF 2 to 78, CATV 01 to 71
	External Antenna Impedance	75 Ω

RGB (PC)

Resolution	Horizontal Frequency(kHz)	Vertical Frequency(Hz)
640 × 480	31.469	59.940
800 × 600	37.879	60.317
1024 × 768	48.363	60
1280 × 720	47.770	59.850
1152 × 864	54.340	60.050
1366 × 768	47.710	59.790

NOTE

The optimal display resolution is 1366 X 768 @ 60 Hz. The optimal timing in each mode is vertical frequency 60 Hz.

HDMI (DTV) supported mode

Resolution	Horizontal Frequency(kHz)	Vertical Frequency(Hz)
720 × 480	31.469 31.500	59.940 60
720 × 576	31.250	50
1280 × 720	37.500 44.960 45	50 59.940 60
1920 × 1080	33.720 33.750 28.125 26.970 27 33.716 33.750 56.250 67.430 67.500	59.940 60 50 23.970 24 29.976 30 50 59.940 60

Make sure to read the Safety Precautions before using the product.
Keep the Owner's Manual (CD) in an accessible place for future reference.
The model and serial number of the TV is located on the back and one side of the TV. Record it below should you ever need service.

MODEL _____

SERIAL _____