www.lg.com

Copyright © 2026 LG Electronics Inc.
All Rights Reserved.

ENGLISH

LG Smart Monitor AI

(Smart Monitor)

OWNER'S MANUAL

Please read this manual carefully before operating your set and retain it for future reference.

27U731SB
32U721SB
32U701SB
37U730SB

The model and serial number of the product are located on the back and on one side of the product. Record them below in case you ever need service.

Model _____

Serial No. _____

Before reading this manual

- Read this manual thoroughly before operating your Monitor, and keep it for future reference.
- On the website you can download the manual including installation, using, troubleshooting, specifications, license etc and view its contents on your PC or mobile device.
- **User Guide :** For more information about this Monitor, read the USER GUIDE embedded in the product.
  - To open the USER GUIDE ⚙ → [⚙] → [Support] → [User Guide]

Separate Purchase

- Separate purchase items can be changed or modified for quality improvement without any notification. Contact your dealer to buy these items. These devices only work with certain models.
- A cable to connect external devices must be purchased separately.
- By connecting a camera to the monitor, you can use it for video conferencing, etc.
- The webcam is an optional feature and is not supplied as an accessory. (27U731SB/32U721SB/37U730SB)

  This part can be purchased from LG Electronics Service Center.
  - Model No. : CAM23PW

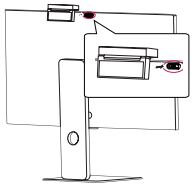

Note

- Product specifications or contents of this manual may be changed without prior notice due to upgrade of product functions.
- The items supplied with your product may vary depending on the model.
- The model name or design may be changed depending on the upgrade of product functions, manufacturer's circumstances or policies.
- Image shown may differ from your Monitor.

Important Precautions

Please read these safety precautions carefully before using the product. All precautions and safety information applies to LCD models.

⚠

- Failure to follow those warnings may result in death, serious injury or damage to the product or other property.

Precautions to the AC Adapter and Electrical Power

⚠

- If water or any foreign substance goes inside the product (Monitor, power cord, or AC adapter), disconnect the power cord immediately and contact the service center.
  - Otherwise, this may cause a fire or electric shock due to damage to the product.
- Do not touch the power plug or AC adapter with wet hands. If the pins of the plug are wet or dusty, wipe and dry them before use.
  - Otherwise, this may cause a fire or electric shock.
- Make sure to completely insert the power cord into the AC adapter.
  - If loosely connected, the poor connection may cause a fire or electric shock.
- Be sure to use power cords and AC adapters provided or approved by LG Electronics, Inc.
  - The use of non-approved products may cause a fire or electric shock.
- When unplugging the power cord, always pull it by the plug. Do not bend the power cord with excessive force.
  - The power line can be damaged, which may cause electric shock or fire.

- Be careful not to step or place heavy objects (electronic appliances, clothing, etc.) on the power cord or AC adapter. Be careful not to damage the power cord or AC adapter with sharp objects.
  - Damaged power cords may cause a fire or electric shock.
- Never disassemble, repair or modify the power cord or AC adapter.
  - This may cause a fire or electric shock.
- Use only the power cord supplied with the unit or another manufacturer's authorised cord.
  - Failure to do so may result in fire or electrical shock or damage to the product.
- Use only a properly grounded plug and receptacle.
  - If you do not you may be electrocuted or injured. Or the product might be damaged.
- Do not use a damaged or loose plug.
  - This may cause electrical shock or fire.
- Operate the display only from a power source(i.e. voltage) indicated in the product specification.
  - Otherwise the product can be damaged, fire can occur or you may be electrocuted. If you are not sure what type of power supply you have, consult a certified electrician.
- In the presence of thunder and lightning, never touch the power cord and signal cable because it can be very dangerous.
  - It can cause electric shock.
- Do not connect several extension cords, electrical appliances or electrical heaters to a single outlet. Use a power bar with a grounding terminal designed for exclusive use with the computer.
  - A fire can break out due to overheating.
- Do not touch the power plug with wet hands. Additionally, if the cord pin is wet or covered with dust, dry the power plug completely or wipe dust off before plugging in the cord.
  - You may be electrocuted due to excess moisture.
- If you don't intend to use the product for a long time, unplug the power cable from the product.
  - Covering dust can cause a fire, or insulation deterioration can cause electric leakage, electric shock or fire.
- Insert the power plug firm so it cannot come loose.
  - A loose connection can cause fire.
- Do not insert metal or other conductive materials into the product openings. Additionally, do not touch the power cable right after plugging into the wall input terminal.
  - You may be electrocuted.
- The AC Plug is the disconnecting device. It should be easily accessible in case of emergency.
- Please make sure the device is installed near the wall outlet to which it is connected and that the outlet is easily accessible.
- Be sure to keep the outlet, AC adapter, and pins of the power plug clean from dust and etc.
  - This may cause a fire.
- Do not unplug the power cord while the product is in use.
  - Electrical shock can damage the product.
- As long as this unit is connected to the AC wall outlet, it is not disconnected from the AC power source even if the unit is turned off.

Precautions in installing the Product

- Keep away from heat sources like heaters or open flames.
  - Electrical shock, fire, malfunction or deformation may occur.
- Keep the packing anti-moisture material or vinyl packing out of the reach of children.
  - Anti-moisture material is harmful if swallowed. If swallowed by mistake, force the patient to vomit and visit the nearest hospital. Additionally, vinyl packing can cause suffocation. Keep it out of the reach of children.
- Do not put heavy objects on the product on sit upon it.
  - If the product collapses or is dropped, you may be injured. Children must pay particular attention.
- Do not leave the power or signal cable where someone can trip over it.
  - The passerby can falter, which can cause electrical shock, fire, product breakdown or injury.
- Install the product in a neat and dry place. Do not use near water.
  - Dust or moisture can cause electrical shock, fire or product damage.
- Do not add accessories that have not been designed for this display.
- If you smell smoke or other odors or hear a strange sound from the product unplug the power cord and contact LG Customer Service.
  - If you continue to use without taking proper measures, electrical shock or fire can occur.
- If you dropped the product or the case is broken, turn off the product and unplug the power cord.
  - If you continue to use without taking proper measures, electrical shock or fire can occur. Contact LG Customer Service.

- Do not drop an object on or apply impact to the product. Do not throw any toys or objects at the product.
  - It can cause injury to humans, problems to the product and damage the display.
- Keep out of reach of children and do not place toys near the product.
- Make sure the product ventilation hole is not blocked. Install the product more than 10cm from the wall.
  - If you install the product too close to the wall, it may be deformed or fire can break out due to internal heat build-up.
- Do not cover the product with cloth or other material (eg. plastic) while plugged in.
  - The product can be deformed or fire can break out due to internal overheating.
- Place the product on a flat and stable surface that is large enough to support the product.
  - If the product is dropped, you may be injured or the product may be broken.
- Install the product where no Electromagnetic Interference occurs.
- Keep the product away from direct sunlight.
  - The product can be damaged.
- Do not place the product on the floor.
  - Small Children and others may trip over it.
- Do not install this product on a wall if it could be exposed to oil or oil mist.
  - This may damage the product and cause it to fall.
- For displays with glossy bezels the user should consider the placement of the display as the bezel may cause disturbing reflections from surrounding light and bright surfaces.

Precautions in Moving the Product

- Make sure to turn off the product.
  - You may be electrocuted or the product can be damaged.
- Make sure to remove all cables before moving the product.
  - You may be electrocuted or the product can be damaged.
- When lifting or moving the product, do not hold it upside down while holding only the stand.
  - This may cause the product to fall resulting in damage or injury.
- Do not shock the product when moving it.
  - You may be electrocuted or the product can be damaged.
- Make sure the panel faces forward and hold it with both hands to move.
  - If you drop the product, the damaged product can cause electric shock or fire.
- Do not place the product face down.
  - This may damage the TFT-LCD screen.

Precautions in Using/Cleaning the Product

- Do not attempt to disassemble, repair or modify the product yourself.
  - Fire or electric shock can occur.
  - Contact LG Customer Service for repair.
- When cleaning the product, unplug the power cord and scrub gently with a soft cloth to prevent scratching. Do not clean with a wet cloth or spray water or other liquids directly onto the product. An electric shock may occur. (Do not use chemicals such as benzene, paint thinners or alcohol)
- Keep the product away from water.
  - Fire or electric shock accident can occur.
- Avoid high temperatures and humidity.
- Do not put or store flammable substances near the product.
  - There is a danger of explosion or fire.
- Keep the product clean at all times.
- Take a comfortable and natural position when working with the product.
- Take a regular break when working with the product for a long time.
- Do not press on the panel with a hand or sharp object such as nail, pencil or pen, or make a scratch on it.
- Keep proper distance from the product and rest from time-to-time.
  - Your vision may be impaired if you look at the product too closely or for too long.
- Set the appropriate resolution by referring to the User's Guide.
- Keep small accessories out of the reach of children.
- Displaying a still image for long time on the monitor may leave persistent image or stain on the monitor screen. To avoid this problem, use a screen saver and power off when this product is not used. Persistent image or stain caused by long time usage are not covered by the warranty on this product.
- Do not use products using high voltage around the Monitor. (ex. Electrical Swatter)
  - Monitor may have malfunction as its electrical shock.
- Spray water onto a soft cloth 2 to 4 times, and use it to clean the front frame, wipe in one direction only. Too much moisture may cause staining.

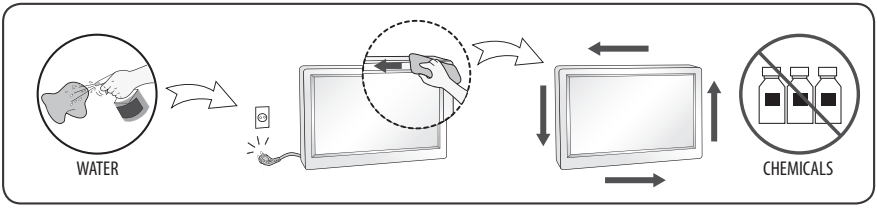

Installation

Lifting and moving the Monitor

Please note the following advice to prevent the Monitor from being scratched or damaged and for safe transportation regardless of its type and size.

- It is recommended to move the Monitor in the box or packing material that the Monitor originally came in.
- Before moving or lifting the Monitor, disconnect the power cord and all cables.
- When holding the Monitor, the screen should face away from you to avoid damage.
- Hold the side and bottom of the Monitor frame firmly. Make sure not to hold the transparent part, speaker, or speaker grill area.
- When transporting a large Monitor, there should be at least 2 people.
- When transporting the Monitor, do not expose the Monitor to jolts or excessive vibration.
- When transporting the Monitor, keep the Monitor upright, never turn the Monitor on its side or tilt towards the left or right.
- Do not apply excessive pressure to cause flexing / bending of frame chassis as it may damage screen.

27U731SB/32U721SB

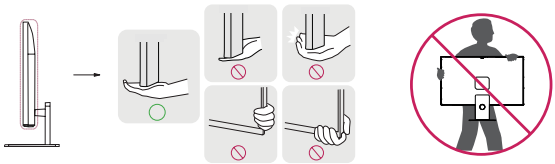

32U701SB

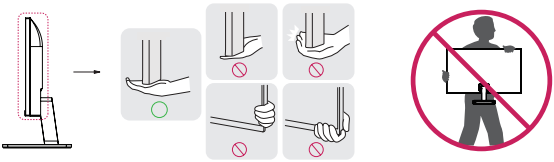

37U730SB

- When handling the Monitor, be careful not to damage the protruding buttons.
- Avoid touching the screen at all times, as this may result in damage to the screen.
- When attaching the stand to the Monitor set, place the screen facing down on a cushioned table or flat surface to protect the screen from scratches.

Installing on a Table

- Lift the monitor and place it on the table in an upright position. Place the monitor at least 100 mm away from the wall to ensure sufficient ventilation.

27U731SB/32U721SB/37U730SB

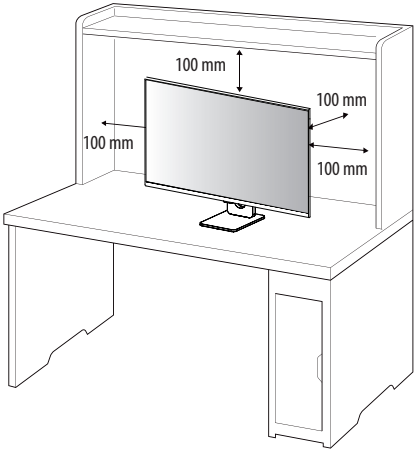

32U701SB

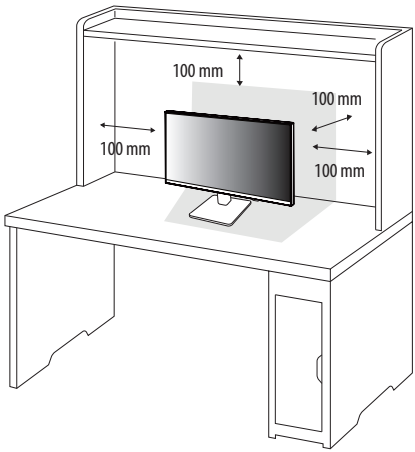

- Unplug the power cord before moving or installing the monitor. There is risk of electric shock.
- Make sure to use the power cord that is provided in the product package and connect it to a grounded power outlet.
- If you need another power cord, please contact your local dealer or the nearest retail store.

Adjusting the Angle

1 Place the monitor mounted on the stand base in an upright position.

2 Adjust the angle of the screen.

The angle of the screen can be adjusted forward or backward from -5° to 15° for a comfortable viewing experience. (27U731SB/32U721SB)

The angle of the screen can be adjusted forward or backward from -5° to 20° for a comfortable viewing experience. (32U701SB/37U730SB)

- To avoid injury to the fingers when adjusting the screen, do not hold the lower part of the monitor's frame as illustrated below.
- Be careful not to touch or press the screen area when adjusting the angle of the monitor.

27U731SB/32U721SB

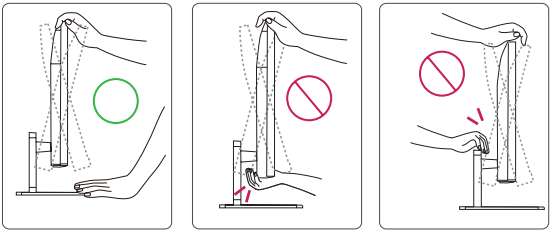

32U701SB

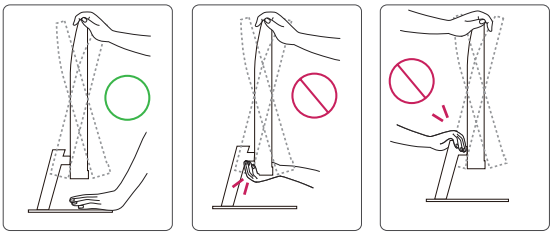

37U730SB

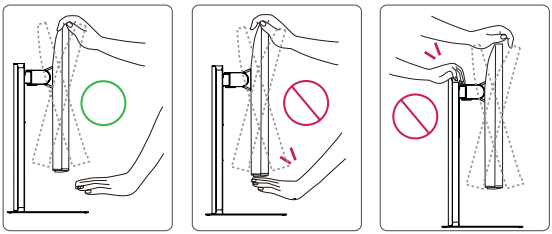

Swivel stand (37U730SB)

- Image shown may differ from your Monitor set.

1 Swivel ±20 degrees and adjust the angle of the Monitor set to suit your view.

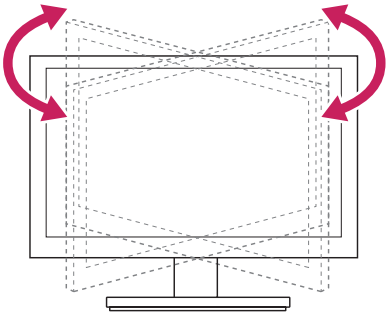

Using the Kensington Lock

For more information on installation and usage, refer to the Kensington lock owner's manual or visit the website at *http://www.kensington.com*.

Connect the monitor to a table using the Kensington security system cable.

27U731SB/32U721SB/37U730SB

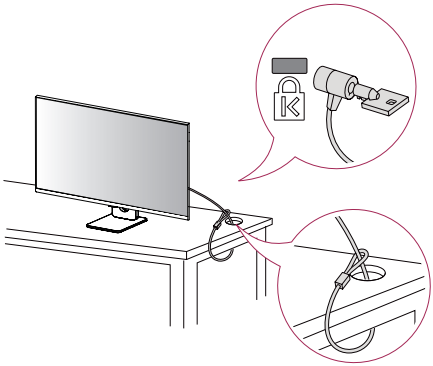

32U701SB

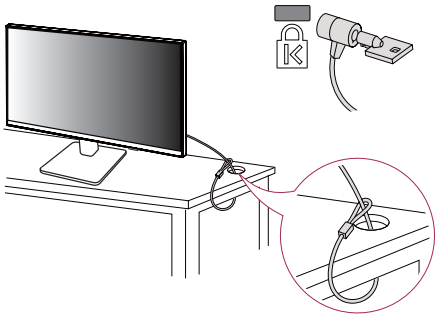

Note

- The Kensington security system is optional. You can obtain optional accessories from most electronics stores.

Installing on the Wall

This monitor meets the specifications for the wall mount plate or other compatible devices.

- Install the monitor at least 100 mm away from the wall and leave about 100 mm of space at each side of the monitor to ensure sufficient ventilation. Detailed installation instructions can be obtained from your local retail store. Alternatively, please refer to the manual for how to install and set up a tilting wall mounting bracket.

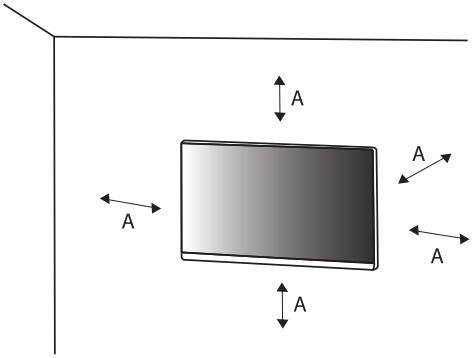

A: 100 mm

Installing the Wall Mount Plate

To install the monitor to a wall, attach a wall mounting bracket (optional) to the back of the monitor.

Make sure that the wall mounting bracket is securely fixed to the monitor and to the wall.

Wall Mount (mm)	100 x 100
Standard screw	M4 x L10
Number of screws	4
Wall Mount Plate (Optional)	LSW149 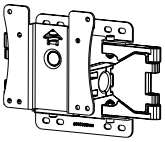

Note

- Use the screws specified by VESA standards.
- The wall mount kit includes the installation guide and all necessary parts.
- The wall mounting bracket is optional. You can obtain optional accessories from your local dealer.
- The length of the screw may differ for each wall mounting bracket. If you use screws longer than the standard length, it may damage the inside of the product.
- For more information, please refer to the user manual for the wall mounting bracket.
- Be careful not to apply too much force while mounting the wall mount plate as it may cause damage to the screen.
- Remove the stand before installing the monitor on a wall mount by performing the stand attachment in reverse.

⚠

- Unplug the power cord before moving or installing the monitor to avoid electric shock.
- Installing the monitor on the ceiling or on a slanted wall may result in the monitor falling off, which could lead to injury. Use an authorized LG wall mount and contact the local dealer or qualified personnel.
- To prevent injury, this apparatus must be securely attached to the wall in accordance with the installation instructions.
- Applying excessive force when tightening screws may cause damage to the monitor. Damage caused in this way will not be covered by the product warranty.
- Use the wall mounting bracket and screws that conform to VESA standards. Damage caused by the use or misuse of inappropriate components will not be covered by the product warranty.
- When measured from the back of the monitor, the length of each installed screw must be 8 mm or less.

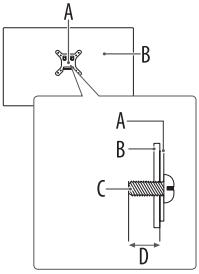

A: Wall Mount Plate

B: Back of the Monitor

C: Standard screw

D: Max. 8 mm

Connections

You can connect various external devices to your monitor. Change the input mode and select the external device you want to connect. For more information about external device connections, see the user manual provided with each device.

Connecting to a Port

Some of the cables are not provided. This monitor supports the Plug and Play* feature.

* Plug and Play: a feature that enables a PC to recognise devices attached by the user without device configuration or user intervention when powering up.

- If you turn the monitor on when the set is cold, the screen may flicker. This is normal.
- Do not press the screen with your finger for a prolonged period as this may result in temporary distortion on the screen.
- Avoid displaying static images on the screen for a long period of time to prevent retention. Use a screensaver if possible.
- A wireless communication device near your monitor can affect the image.
- For an optimal connection, HDMI cables and USB devices should have bezels less than 10 mm thick and 18 mm width. Use an extension cable that supports USB 2.0 if the USB cable or USB memory stick does not fit into your Monitor's USB port. (Depending on model)

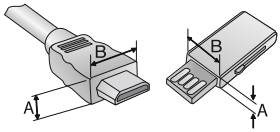

* A ≦ 10 mm

* B ≦ 18 mm

HDMI Connection

- When connecting the HDMI cable, the product and external devices should be turned off and unplugged.
- Supported HDMI Audio format:
  Dolby Digital / Dolby Digital Plus (32 kHz / 44.1 kHz / 48 kHz), PCM (32 kHz / 44.1 kHz / 48 kHz / 96 kHz / 192 kHz)
- To comply with the specifications of the product, use a shielded interface cable with ferrite core, such as a HDMI cable.
- Use a recommended Speed HDMI®/™ cable (shorter than 3 m).
  Recommended HDMI Cable Types
  - High Speed HDMI®/™ Cable
  - High Speed HDMI®/™ Cable with Ethernet
- Use a certified cable with the HDMI logo attached. If you do not use a certified HDMI cable, the screen may not display or a connection error may occur.
- If you cannot hear any sound in HDMI mode please check your PC settings. Some PCs require you to manually change the default audio output to HDMI.
- When connecting a PC via HDMI, check the input for PC.
- It can be caused compatibility issues with some PCs.

Note

- If the device connected to Input Port also supports HDMI Deep Color, your picture may be clearer. However, if the device doesn't support it, it may not work properly. In that case, change the Monitor's [HDMI Deep Color] setting to off.
- ⚙ → [⚙] → [System] → [External Devices] → [HDMI Settings] → [HDMI Deep Color]

USB-C (UPSTREAM) connection

27U731SB/32U721SB/37U730SB
Transmits digital video and audio signals from your PC to the monitor.

Note

- USB-C does not support fast charging. Gender converters for fast charging is also not supported.
- PD(Power Delivery) and DP Alternate Mode(DP over USB-C) are supported via USB-C (UPSTREAM)Port.
- Features may not work properly depending on the connected device's specifications and the environment.
- USB-C port is not for the monitor power source but for a PC power source. Connect adapter to supply power to the monitor.

USB (USB-IN) Device connection

You can use USB Devices connected to the device's USB In Port on PC and webOS. (*Some USB devices may have restrictions of use on webOS.)

To use the switching hub function, press and hold the OSD Up button, or press the Settings button on the remote control, and select [ ] > [System] > [External Device] > [Switching Hub] on the menu.

* USB storage devices may not switch depending on the model. After removing USB storage device, it is recommended to use Switching Hub.

Note

- It is recommended you install all Windows Updates to keep your Windows up-to-date before connecting to the product for use.
- Peripheral devices are sold separately.
- A keyboard, mouse, or USB device can be connected to the USB port.
- USB-IN port (the Downstream port) supports USB 2.0 device.

- Cautions when using a USB device.
  - A USB device with an automatic recognition program installed, or that uses its own driver, may not be recognised.
  - Some USB devices may not be supported or may not work properly.
  - It is recommended to use a USB hub or hard disk drive with power supplied. (If the power supply is not adequate, the USB device may not be recognised properly.)
  - Some USB Hubs may not work. If a USB device connected using a USB Hub is not detected, connect it to the USB port on the Monitor directly.
  - Connecting a USB-C Dockingstation or USB-C Hub to a smart monitor may not work.

Parts and Buttons

The image may be different according to the model.

27U731SB/32U721SB

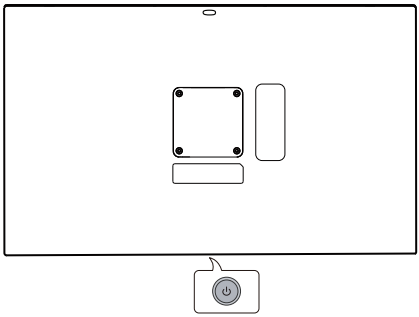

37U730SB

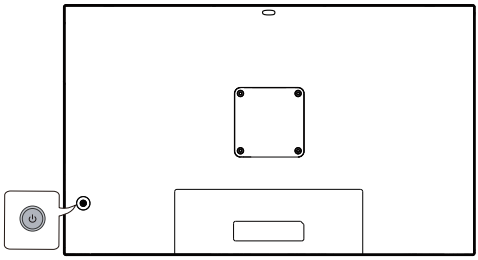

Power On (Press)
Quick Menu (Press [1])
Menu Selection (Press [2])
Power Off [3] (Press and Hold)

Volume Control
Menu Control [2]

Menu Control [2]

1 When the monitor is turned on, press the ⏻ button one time.
2 You can use the function when you control menu.
3 Power off the monitor.

Quick Menu

⏻	Turns the power off.
	Changes the input source.
	Accesses the main menu.
×	Close the quick menu.

32U701SB

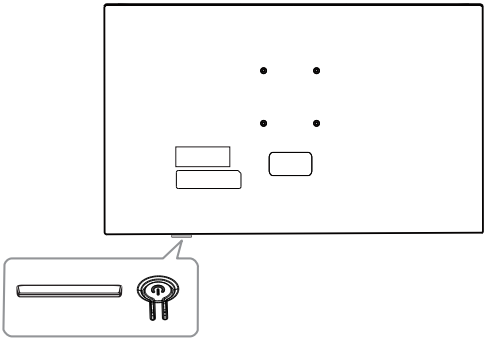

	Power On (Press) Power Off[1] (Press and Hold) Menu Control (Press[2]) Menu Selection (Press and Hold[3])	1) All running apps will close. 2) You can access and adjust the menu by pressing the button. 3) You can use the function when you access menu control.

Adjusting the menu

	Turns the power off.
	Changes the input source.
+ −	Adjusts the volume level.

Specifications

Environment Condition	
Operating Temperature	0 ℃ to 40 ℃
Operating Humidity	Less than 80 %
Storage Temperature	-20 ℃ to 60 ℃
Storage Humidity	Less than 85 %

Product Information

27U731SB/32U721SB/37U730SB

Wireless module(LGSBWAC23)Specifications	
Wireless LAN (IEEE 802.11a/b/g/n/ac)	
Frequency range	Output Power (Max.)
2,400 to 2,483.5 MHz	16 dBm
5,150 to 5,725 MHz	16 dBm
5,725 to 5,850 MHz	13 dBm
Bluetooth	
Frequency range	Output Power (Max.)
2,400 to 2,483.5 MHz	8 dBm
As band channels can vary per country, the user cannot change or adjust the operating frequency. This product is configured for the regional frequency table. For consideration of the user, this device should be installed and operated with a minimum distance of 20 cm between the device and the body.	

32U701SB

Wireless module(LGSBWAC24)Specifications	
Wireless LAN (IEEE 802.11a/b/g/n/ac)	
Frequency range	Output Power (Max.)
2,400 to 2,483.5 MHz	16.5 dBm
5,150 to 5,725 MHz	16 dBm
5,725 to 5,850 MHz	13 dBm
Bluetooth	
Frequency range	Output Power (Max.)
2,400 to 2,483.5 MHz	7 dBm
As band channels can vary per country, the user cannot change or adjust the operating frequency. This product is configured for the regional frequency table. For consideration of the user, this device should be installed and operated with a minimum distance of 20 cm between the device and the body.	

Specifications are subject to change without notice.
The symbol ~ means alternating current, and the symbol ⎓ means direct current.

Dimensions: Monitor Size (Width x Depth x Height)

27U731SB

- With Stand: 613.2 mm x 209.9 mm x 452 mm
- Without Stand: 613.2 mm x 45.6 mm x 372.6 mm

32U721SB

- With Stand: 714.2 mm x 209.9 mm x 509.8 mm
- Without Stand: 714.2 mm x 45.8 mm x 429.4 mm

32U701SB

- With Stand: 714.1 mm x 220.0 mm x 512.0 mm
- Without Stand: 714.1 mm x 43.9 mm x 423.3 mm

37U730SB

- With Stand: 823.7 mm x 242 mm x 640.1 mm
- Without Stand: 823.7 mm x 52.1 mm x 483.8 mm

Weight (Without Packaging)

27U731SB

- With Stand: 5.6 kg
- Without Stand: 4.5 kg

32U721SB

- With Stand: 6.2 kg
- Without Stand: 5.1 kg

32U701SB

- With Stand: 5.5 kg
- Without Stand: 4.5 kg

37U730SB

- With Stand: 11.7 kg
- Without Stand: 7.4 kg

Power Sources

32U701SB

- Power Rating: 19 V ⎓ 2.5 A

27U731SB/32U721SB

- Power Rating: 19 V ⎓ 7.0 A

37U730SB

- Power Rating: 100-240 V~ 50/60 Hz 1.4 A

AC/DC Adapter

32U701SB

- Model: ADS-48FSK-19 19048EPCU-1/
  ADS-48FSK-19 19048EPK-1/
  ADS-48FSK-19 19048EPG-1/
  ADS-48SQ-19-3 19048E

  Manufacturer: Shenzhen Honor Electronic Co., Ltd
- Model: MS-V2530R190-048L0-US/
  MS-V2530R190-048L0-DE/
  MS-Z2530R190-048M0-E

  Manufacturer: MOSO POWER SUPPLY TECHNOLOGY C0.,LTD
  - Input: 100-240 V~ 50/60 Hz 1.5 A
  - Output: 19 V ⎓ 2.53 A

27U731SB/32U721SB

- Model: ADS-150KL-19N-3 190140E

  Manufacturer: Shenzhen Honor Electronic Co., Ltd
- Model: A40-Z7370R190-140G0-E

  Manufacturer: MOSO POWER SUPPLY TECHNOLOGY C0.,LTD
  - Input: 100-240 V~ 50/60 Hz 2.0 A
  - Output: 19 V ⎓ 7.37 A

Power Delivery

27U731SB/32U721SB/37U730SB

- 65 W

HDMI

Resolution	Horizontal Frequency (kHz)	Vertical Frequency (Hz)	Remarks
640 x 480	31.46	59.94	
800 x 600	37.87	60.31	
1024 x 768	48.36	60.00	
1920 x 1080	67.50	60.00	
1920 x 1080	66.58	59.93	
2560 x 1080	66.64	60.00	Wide Aspect ratio 21:9
2560 x 1440	88.78	59.95	
3840 x 1080	66.62	59.97	Wide Aspect ratio 32:9
3840 x 1600	98.75	60.00	Wide Aspect ratio 21:9
3840 x 2160	65.68	29.98	Recommended (When [HDMI Deep Color] is Off)
3840 x 2160	133.31	59.99	Recommended (When [HDMI Deep Color] is On)

USB-C (27U731SB/32U721SB/37U730SB)

Resolution	Horizontal Frequency (kHz)	Vertical Frequency (Hz)	Remarks
640 x 480	31.46	59.94	
800 x 600	37.87	60.31	
1024 x 768	48.36	60.00	
1920 x 1080	67.50	60.00	
1920 x 1080	66.58	59.93	
2560 x 1440	88.78	59.95	
3840 x 2160	65.68	29.98	
3840 x 2160	133.31	59.99	Recommended

HDMI Video input

Factory support mode (Preset Mode)	Horizontal Frequency (kHz)	Vertical Frequency (Hz)	Remarks
480P	31.5	60	
720P	45.0	60	
1080P	67.5	60	
2160P	135.0	60	

Open Source Software Notice Information

To obtain the source code that is contained in this product, under GPL, LGPL, MPL, and other open source licenses that have the obligation to disclose source code, and to access all referred license terms, copyright notices and other relevant documents, please visit *https://opensource.lge.com*.

LG Electronics will also provide open source code to you on CD-ROM for a charge covering the cost of performing such distribution (such as the cost of media, shipping, and handling) upon email request to *opensource@lge.com*.

This offer is valid to anyone in receipt of this information for a period of three years after our last shipment of this product.

Licenses

Each model has different licenses. Visit *www.lg.com* for more information on the license.

HDMI™
HIGH-DEFINITION MULTIMEDIA INTERFACE

Manufactured under license from Dolby Laboratories. Dolby, Dolby Vision, Dolby Vision IQ, Dolby Audio, Dolby Atmos, and the double-D symbol are trademarks of Dolby Laboratories Licensing Corporation.

HEVC Advance™
Covered by patents at patentlist.accessadvance.com

The Bluetooth® word mark and logos are registered trademarks owned by Bluetooth SIG, Inc. and any use of such marks by LG Electronics Inc. is under license. Other trademarks and trade names are those of their respective owners.

QuickSet®

27U731SB/32U721SB/37U730SB

USB Type-C® and USB-C® are registered trademarks of USB Implementers Forum. USB 2.0 Type-C™ is a trademark of USB Implementers Forum.

Troubleshooting

Nothing is displayed on the screen.

- Is the monitor's power cord plugged in?
  - Check if the power cord is correctly plugged into the power outlet.
- Is the [No Signal] message being displayed?
  - This is displayed when the signal cable between the PC and the monitor is missing or disconnected. Check the cable and reconnect it.

Screen display is unstable and shaky. / Images displayed on the monitor leave shadow trails.

- Did you select the appropriate resolution?
  - If the selected resolution is HDMI 1080i 60/50 Hz (interlaced), the screen may be flickering. Change the resolution to 1080p or the recommended resolution.
  - Not setting the graphics card to the recommended (optimal) resolution may result in blurred text, a dimmed screen, a truncated display area or misalignment of the display.
  - The setting methods may be different depending on the computer or operating system, and some resolutions may not be available depending on the performance of the graphics card. If this is the case, contact the manufacturer of the computer or graphics card for assistance.

The screen retains an image.

- Does image sticking occur even when the monitor is turned off?
  - Displaying a still image for a prolonged time may cause damage to the screen, resulting in the retention of the image.
  - To extend the lifetime of the monitor, use a screensaver.
- Are there spots on the screen?
  - When using the monitor, pixilated spots (red, green, blue, white, or black) may appear on the screen. This is normal for an LCD screen. It is not an error, nor is it related to the monitor's performance.

Do you see an "Unrecognised monitor, Plug and Play (VESA DDC) monitor found" message?

- Make sure to check if the graphics card supports Plug and Play function.

Cannot control the Monitor with the remote control.

- Check if there is any obstacle between the product and the remote control.
- Check if the batteries are still working and properly installed (⊕ to ⊕, ⊖ to ⊖).
- Replace the batteries with new ones.

The Monitor turns off suddenly.

- To disable this function, use your remote control to go to ⚙ → [⚙] → [System] → [Time & Timer] → [Timers] → [Sleep Timer] → [Off].
- Check if external devices are working together.
- Check if the auto-off function is activated on the settings related time. If there is no signal while the Monitor is on, the Monitor will turn off automatically after 15 minutes of inactivity.

4K resolution is unavailable.

- Did you check the cable connection?
  - Check if the cable is properly connected.
  - It is recommended to use the accessories supplied with the product.
- Is the resolution and refresh rate set properly?
  - Set the proper resolution and refresh rate in the PC screen resolution settings or the player's option menu.
- Does the connected external device support 4K resolution?
  - It is available only on external devices that support 4K resolution.
  - Check if the connected external device supports 4K resolution.
- Is the [HDMI Deep Color] function enabled?
  - Go to ⚙ → ⚙ → [System] → [External Devices] → [HDMI Settings] → [HDMI Deep Color] function to enable the function.

A

Replacing the Remote Control Battery

Use 3 V, CR2025 button cell battery. Replace the battery with new one and insert it in the battery tray as shown.

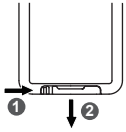

1 To separate the battery tray on the back of the remote control, push the hook to the side and then pull it.
2 Align the ⊕ side of the replacement battery to the battery tray label and insert them correctly.
3 Push the battery tray in until it clicks.

The illustrations may differ from the actual accessories.

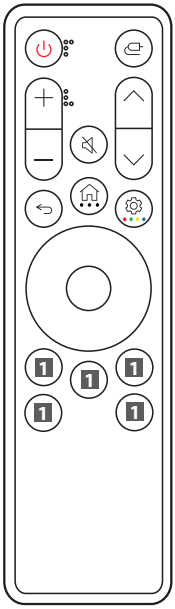

Power Turns the Monitor on or off.
Input Selects the input mode.
+/— Volume buttons Adjusts the volume level.
Mute Mutes all sounds.
∧/∨ Programmes buttons Scrolls through the saved programmes.
Back Returns to the previous level.
Home Displays the Home menu, such as the current time, weather, app list, and external input.
• • • More Actions If you press and hold the button, it allows you to view details of item.
Settings Makes the main menu screen appear or disappear.
• • • • Color key If you press and hold the button, it allows you to use the 4 color buttons.
Direction buttons and OK It allows you to move, select, and adjust menus.
1 Streaming Service buttons Connects to the Video Streaming Service.
1 Home Dashboard Accesses the [Home Dashboard].
1 User Guide Accesses the [User Guide].
1 ▷, || Control buttons for media contents.

(Some buttons and services may not be provided depending on models or regions.)

Note

- Be sure to point the remote control toward the remote control sensor on the monitor.
- The product's internal and external batteries should not be exposed to excessive heat such as direct sunlight, fire, or the like.
- Risk of fire or explosion if the battery is replaced by an incorrect type.

B

Short press

Basic Guide

	Power: Turns the monitor On or Off.
	Select **Custom Menu** / **Accessibility**.
	Display the **Home Hub**.
	Accesses the **Monitor Guide**.
	Check for recommended content. (Some recommended services may not be available in some countries.)
	Displays the **Home Menu**.
	Displays more remote control functions.
❶	**Press** to select menu and operate device. (play/pause, etc.) **Scroll up and down** Scrolls the screen or change programmes.
❷	**Up, Down, Left, Right** Navigation buttons.
	Move to the **Previous Step**.
	Displays the **Quick Settings Menu**.
❸	Various content service buttons.

Microphone

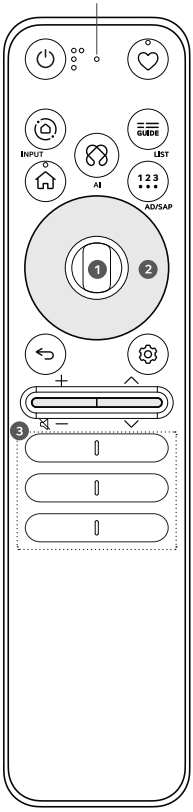

Long press

Extension Guide

	Accesses the **Accessibility Shortcuts**.
	Changes the **Input Source**.
	Accesses the saved **Programmes List**.
	Speak to the remote control while pressing and holding the button to use the **Voice Recognition** feature.
	To enable the **Screen Zoom**.
	To enable **Voice Guidance** for screen content or to set up multi-audio options.
	The screen displayed on the Monitor is closed and the **Home Menu** appears.
	Displays the **All Settings Menu**.

+ / —	Push up and down to **Adjust the Volume**.
⌃ / ⌄	Push up and down to **Change Programmes**.
🔇 —	Push down long press to **Mute**.

Note

- The terms in this manual are used in general terms to help users understand and may not match the terms displayed on the screen.

The descriptions in this manual are based on the buttons on the remote control. Please read this manual carefully and use the Monitor correctly.

(Some buttons and services may not be provided depending on models or regions.)

How to register the Magic Remote Control

To use the Magic Remote, first pair it with your Monitor.

1 Put batteries into the Magic Remote and turn the Monitor on.

2 Point the Magic Remote at your Monitor and press the **Wheel (OK)** on the remote control.

* If the Monitor fails to register the Magic Remote, try again after turning the Monitor off and back on.

How to deregister the Magic Remote Control

Press the **(Back)** and **(Home)** buttons at the same time, for five seconds, to unpair the Magic Remote with your Monitor.

* Press and hold the **(Home)** and **(Q. Settings)** buttons for more than 5 seconds to disconnect and re-register the Magic Remote at the same time.

- It is recommended that an Access Point (AP) be located more than 0.2 m away from the Monitor. If the AP is installed closer than 0.2 m, the Magic remote control may not perform as expected due to frequency interference.

Using Always Ready

(Depending on model)

You can operate the Monitor and connect to Bluetooth with direct voice recognition

while the power is off.

* Pressing the **(Power)** button while watching Monitor switches the screen to [Always Ready] that is turned on, and pressing the **(Power)** button once more turns the screen to [Always Ready] that is turned off.
* Press the **(Home)** button or the **(Back)** button to watch Monitor when the screen is in [Always Ready] that is turned on.
* Press the **Wheel (OK)** button to display the wallpaper when the screen is in [Always Ready] that is turned off, and press the **(Power)** button to watch Monitor.

Note

- Using Always Ready may increase energy consumption.

LG