LG
Life's Good

OWNER'S MANUAL

LED LCD COMPUTER MONITOR

(LED Computer Monitor*)

* Disclaimer : LG LED Monitor applies LCD screen with LED backlights.
This product is a computer monitor and not for television purpose.

Please read this manual carefully before operating your set and retain it for future reference.

27UN880/27UN880P
27BN88U

www.lg.com

Copyright © 2020 LG Electronics Inc. All Rights Reserved.

TABLE OF CONTENTS

LICENSE 2

OPEN SOURCE SOFTWARE NOTICE INFORMATION 3

ASSEMBLING AND PREPARING 3

USING THE MONITOR..... 15

USER SETTINGS 17

TROUBLESHOOTING 30

PRODUCT SPECIFICATION..... 32

LICENSE

Each model has different licenses. Visit *www.lg.com* for more information on the license.

The terms HDMI, HDMI High-Definition Multimedia Interface, HDMI trade dress and the HDMI Logos are trademarks or registered trademarks of HDMI Licensing Administrator, Inc.

The SuperSpeed USB Trident logo is a registered trademark of USB Implementers Forum, Inc.

VESA, VESA logo, DisplayPort compliance logo and DisplayPort compliance logo for dual-mode source devices are all registered trademarks of the Video Electronics Standards Association.

MaxxAudio and additional MAXX trademarks are trademarks and/or registered trademarks of Waves Audio Ltd.

* USB Type-C™ and USB-C™ are trademarks of USB Implementers Forum.

OPEN SOURCE SOFTWARE NOTICE INFORMATION

To obtain the source code that is contained in this product, under GPL, LGPL, MPL, and other open source licenses that have the obligation to disclose source code, and to access all referred license terms, copyright notices and other relevant documents, please visit *https://opensource.lge.com*.

LG Electronics will also provide open source code to you on CD-ROM for a charge covering the cost of performing such distribution (such as the cost of media, shipping, and handling) upon email request to *opensource@lge.com*.

This offer is valid to anyone in receipt of this information for a period of three years after our last shipment of this product.

ASSEMBLING AND PREPARING

CAUTION

- Always use genuine LG components to ensure safety and product performance.
- The product warranty will not cover damage or injury caused by the use of unauthorized components.
- It is recommended that use the supplied components.
- If you use generic cables not certified by LG, the screen may not display or there may be image noises.
- Illustrations in this document represent typical procedures, so they may look different from the actual product.
- Do not apply foreign substances (oils, lubricants, etc.) to the screw parts when assembling the product. (Doing so may damage the product.)
- Applying excessive force when tightening screws may cause damage to the monitor. Damage caused in this way will not be covered by the product warranty.
- Do not carry the monitor upside down by just holding the base. This may cause the monitor to fall off the stand and could result in personal injury.
- When lifting or moving the monitor, do not touch the monitor screen. The force applied to the monitor screen may cause damage to it.

NOTE

- The components may look different from those illustrated here.
- Without prior notice, all product information and specifications contained in this manual are subject to change to improve the performance of the product.
- To purchase optional accessories, visit an electronics store or an online shopping site, or contact the retailer from which you purchased the product.
- The power cord provided may differ depending upon the region.

Supported Drivers and Software

You can download and install the latest version from the LGE website (*www.lg.com*).

Drivers and Software	Installation Priority
Monitor Driver	Recommended
OnScreen Control	Recommended
Dual Controller	Optional
True Color Pro	Optional

Product and Button Description

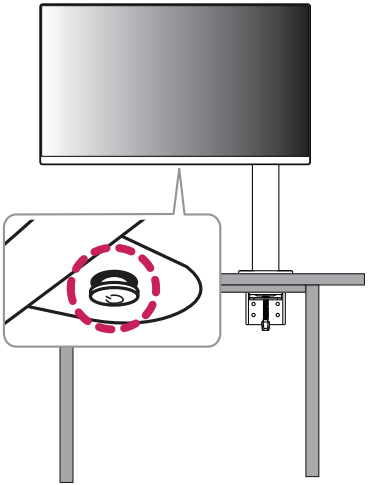

How to Use the Joystick Button

You can easily control the functions of the monitor by pressing the joystick button or moving it left/right with your finger.

Basic Functions

		**Power on**	Press the joystick button once with your finger to turn on the monitor.
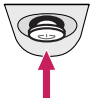		**Power off**	Press and hold the joystick button once with your finger to turn off the monitor.
	◄/►	**Volume control**	You can control the volume by moving the joystick button left/right.

NOTE

- The joystick button is located at the bottom of the monitor.

Moving and Lifting the Monitor

When moving or lifting the monitor, follow these instructions to prevent the monitor from being scratched or damaged and to ensure safe transportation, regardless of its shape or size.

- Place the monitor in the original box or packing material before attempting to move it.
- Before moving or lifting the monitor, disconnect the power cord and all other cables.
- Hold the bottom and side of the monitor frame firmly. Do not hold the panel itself.
- When holding the monitor, the screen should face away from you to prevent it from being scratched.
- When transporting the monitor, do not expose the monitor to shock or excessive vibration.
- When moving the monitor, keep it upright and never turn the monitor on its side or tilt it sideways.
- Disassemble and reposition the head and stand separately when moving the monitor.

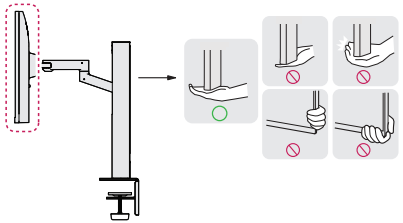



CAUTION

- Avoid touching the monitor screen as much as possible.
  - This may result in damage to the screen or some of the pixels used to create images.
- Standing the monitor panel up vertically may cause the monitor to fall due to the joystick and cause damage or injury. In addition, this may cause the joystick button to malfunction.

Installing on a Table

- Lift the monitor and place it on the table in an upright position. Place the monitor at least 100 mm away from the wall to ensure sufficient ventilation.

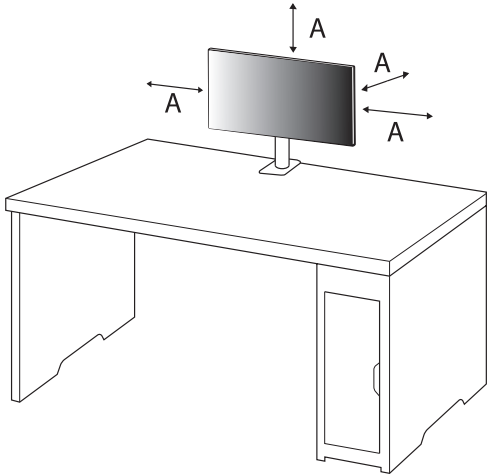

A: 100 mm

ENGLISH

⚠ CAUTION

- Unplug the power cord before moving or installing the monitor. There is risk of electric shock.
- Make sure to use the power cord that is provided in the product package and connect it to a grounded power outlet.
- If you need another power cord, please contact your local dealer or the nearest retail store.
- Make sure the table on which the product is installed is stable and solid. A table made of fragile materials such as glass may be damaged.
- The monitor may tilt on uneven or slanted tables.
- Installation of the stand may leave a mark on the table.
- Do not hang heavy items such as bags or clothes on the stand.
- Avoid falls by verifying that the table is large enough to support the monitor.
- Make sure to fix the stand firmly on the table.
- When installing the stand on the table, make sure the stand is fully engaged to the table so that you would not hit your head when you get up.
- Do not use excessive force when rotating the monitor. Allowing the monitor to contact a wall may injure persons nearby or damage the monitor.

How to fix a clamp

1 After positioning the stand on the table, secure it by turning the handle.

- For tables without a protrusion
  - The table should be less than 90 mm thick.

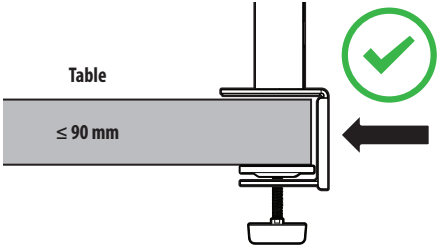

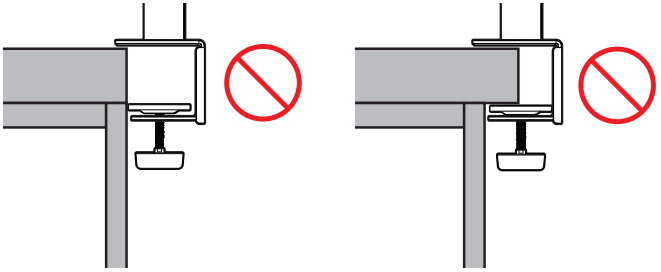

How to install on tables with different thickness levels

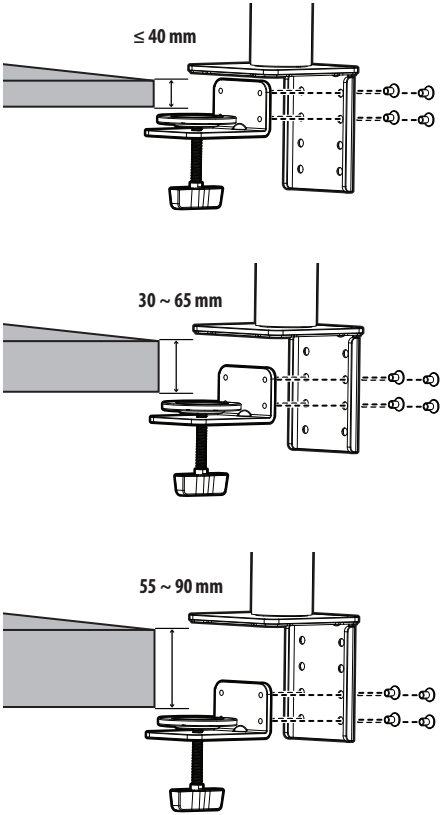

⚠ CAUTION

- Stands that are not fully engaged to the table may allow the monitor to wobble or fall over.
- Make sure the table is solid and stable enough to fully support installation of the monitor. Tables made of fragile materials such as glass may break.
- For tables with a protrusion
  - If the protrusion is located more than 95 mm away from the edge of the table, install the monitor only when a flat protrusion is located between 15 mm to 90 mm from the edge of the table.

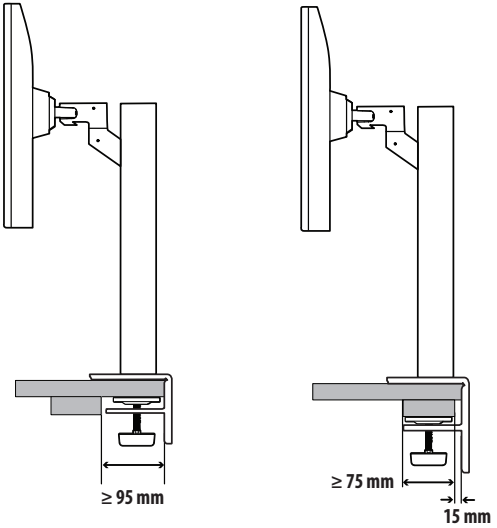

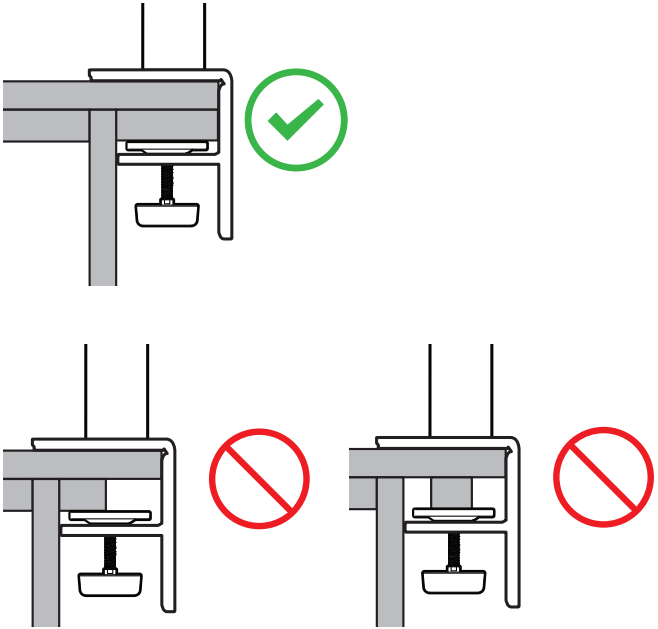

Swivel stand

Swivel the monitor left and right within 280 degrees to fit your view.

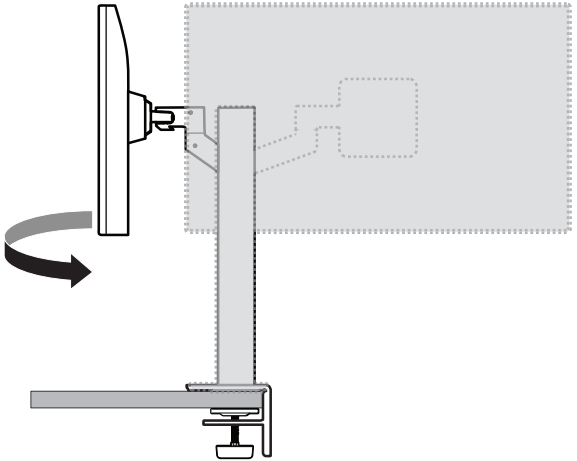

Pivot Feature

The pivot feature allows the monitor to rotate 90 ° counter-clockwise.

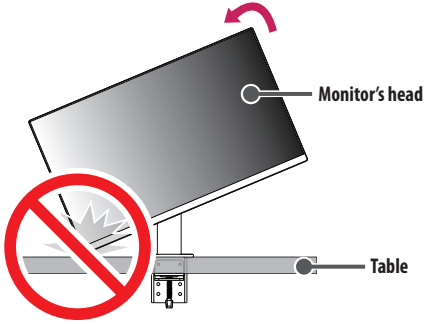

⚠ WARNING

- When using the Pivot function, do not rotate the monitor too fast or with excessive force. The table may be scratched by contact with the monitor's head.

1 Raise the monitor up to the maximum height.

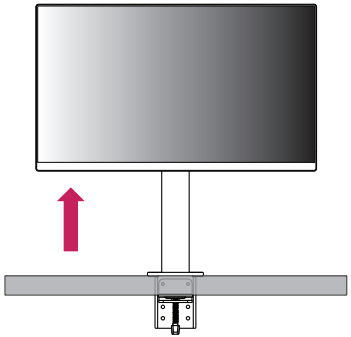

2 Adjust the angle of the monitor in the direction of the arrow as shown in the figure.

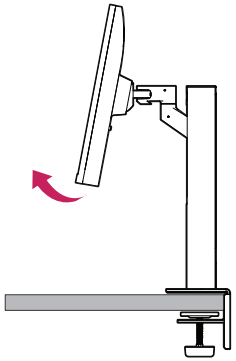

3 Rotate the monitor counter-clockwise as shown in the figure.

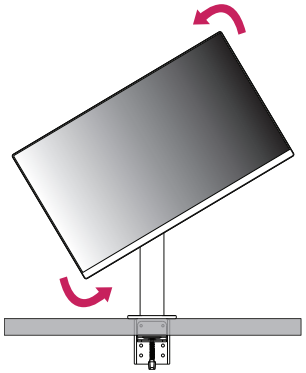

4 Complete the installation by rotating the monitor 90 ° as shown in the figure.

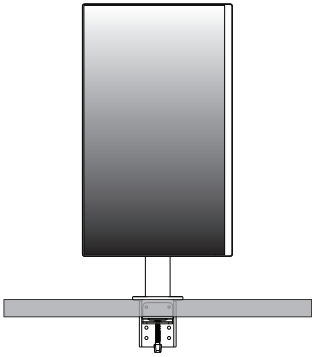

Leveling the Screen

If the screen appears crooked to one side after the product has been placed in position, straighten the angle horizontally as follows.

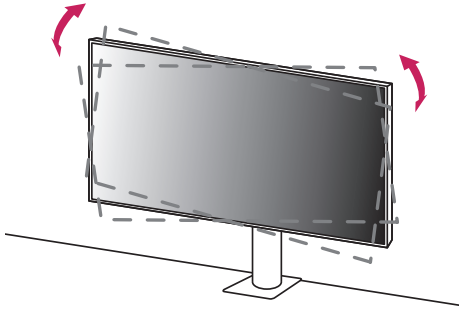

Adjusting the Stand Height

1 Make sure to hold and move the monitor with both hands.

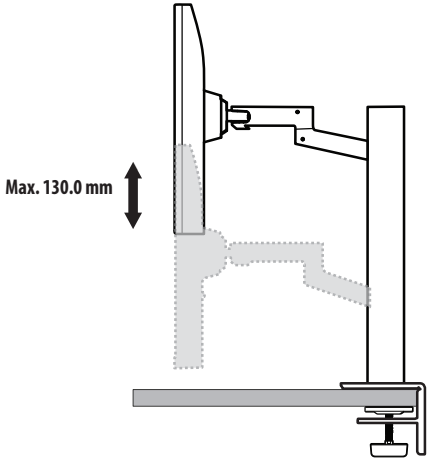

⚠ WARNING

- To avoid injury when adjusting the height, do not put your hands on the stand.

Adjusting the Angle

Adjust the angle of the screen.

The angle of the screen can be adjusted forward or backward from -25 ° to 25 ° for a comfortable viewing experience.

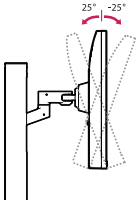

⚠ WARNING

- To avoid injury to the fingers when adjusting the screen, do not hold the lower part of the monitor's frame as illustrated below.
- Be careful not to touch or press the screen area when adjusting the angle of the monitor.



- Beware of cables attached to the monitor when rotating it.

ENGLISH

Using the Kensington Lock

For more information on installation and usage, refer to the Kensington lock owner's manual or visit the website at *http://www.kensington.com*.

Connect the monitor to a table using the Kensington security system cable.

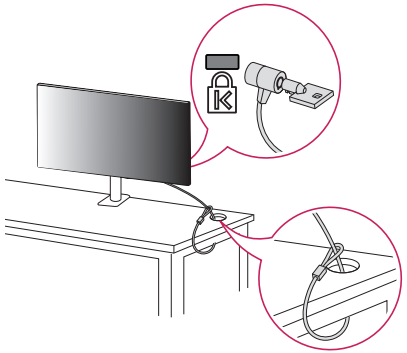

NOTE

- The Kensington security system is optional. You can obtain optional accessories from most electronics stores.

Installing on the Wall

This monitor meets the specifications for the wall mount plate or other compatible devices.

Install the monitor at least 100 mm away from the wall and leave about 100 mm of space at each side of the monitor to ensure sufficient ventilation. Detailed installation instructions can be obtained from your local retail store. Alternatively, please refer to the manual for how to install and set up a tilting wall mounting bracket.

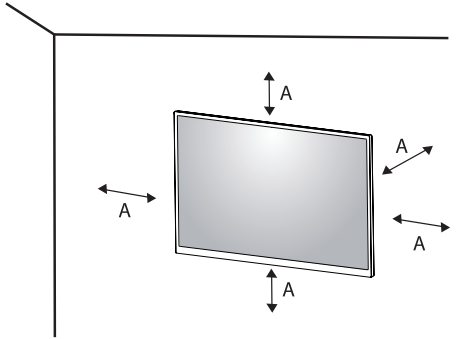

A: 100 mm

Installing the Wall Mount Plate

To install the monitor to a wall, attach a wall mounting bracket (optional) to the back of the monitor.

Make sure that the wall mounting bracket is securely fixed to the monitor and to the wall.

- Wall Mount (mm): 100 x 100
- Standard screw: M4 x L10
- Number of screws: 4
- Wall Mount Plate (Optional): LSW149

NOTE

- A non-VESA standard screw may damage the product and cause the monitor to fall. LG Electronics is not liable for any accidents relating to the use of non-standard screws.
- The wall mount kit includes the installation guide and all necessary parts.
- The wall mounting bracket is optional. You can obtain optional accessories from your local dealer.
- The length of the screw may differ for each wall mounting bracket. If you use screws longer than the standard length, it may damage the inside of the product.
- For more information, please refer to the user manual for the wall mounting bracket.
- Be careful not to apply too much force while mounting the wall mount plate as it may cause damage to the screen.
- Remove the stand before installing the monitor on a wall mount by performing the stand attachment in reverse.

CAUTION

- Unplug the power cord before moving or installing the monitor to avoid electric shock.
- Installing the monitor on the ceiling or on a slanted wall may result in the monitor falling off, which could lead to injury. Use an authorized LG wall mount and contact the local dealer or qualified personnel.
- To prevent injury, this apparatus must be securely attached to the wall in accordance with the installation instructions.
- Applying excessive force when tightening screws may cause damage to the monitor. Damage caused in this way will not be covered by the product warranty.
- Use the wall mounting bracket and screws that conform to VESA standards. Damage caused by the use or misuse of inappropriate components will not be covered by the product warranty.
- When measured from the back of the monitor, the length of each installed screw must be 8 mm or less.

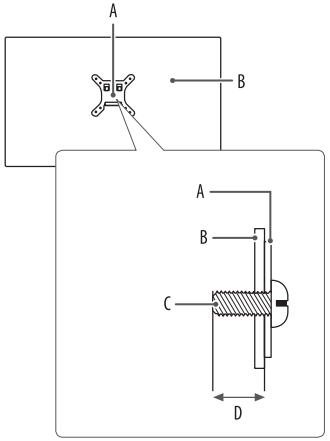

A: Wall Mount Plate
B: Back of the Monitor
C: Standard screw
D: Max. 8 mm

USING THE MONITOR

- Illustrations in this manual may differ from the actual product.

Press the joystick button, go to **Settings** → **Input**, and then select the input option.

CAUTION

- Do not press the screen for a prolonged time. This may cause image distortion.
- Do not display a still image on the screen for a prolonged time. This may cause image retention. Use a PC screensaver if possible.
- When connecting the power cord to the outlet, use a grounded (3-hole) power strip or a grounded power outlet.
- The monitor may flicker when turned on in an area where the temperature is low. This is normal.
- Sometimes red, green, or blue spots may appear on the screen. This is normal.

Connecting to a PC

- This monitor supports the *Plug and Play feature.

* Plug and Play: A feature that allows you to add a device to your computer without having to reconfigure anything or install any manual drivers.

HDMI Connection

Transmits digital video and audio signals from your PC to the monitor.

CAUTION

- Using a DVI to HDMI / DP (DisplayPort) to HDMI cable may cause compatibility issues.
- Use a certified cable with the HDMI logo attached. If you do not use a certified HDMI cable, the screen may not display or a connection error may occur.
- Recommended HDMI cable types
  - High-Speed HDMI®/™ cable
  - High-Speed HDMI®/™ cable with Ethernet

DisplayPort Connection

Transmits digital video and audio signals from your PC to the monitor.

NOTE

- There may be no video or audio output depending on the DP (DisplayPort) version of the PC.
- If you are using a Mini DisplayPort output graphics card, use a Mini DP to DP (Mini DisplayPort to DisplayPort) cable or gender that supports DisplayPort1.2 or 1.4. (Sold separately)

USB-C connection

Transmits digital video and audio signals from your PC to the monitor.

NOTE

- PD(Power Delivery) and DP Alternate Mode(DP over USB-C) are supported via USB-C Port.
- Features may not work properly depending on the connected device's specifications and the environment.
- USB-C port is not for the Monitor Power source but for a PC power source.
  Connect Adapter to supply power to the Monitor

Connecting Peripherals

USB Device connection

The USB port on the product functions as a USB hub.

NOTE

- It is recommended you install all Windows Updates to keep your Windows up-to-date before connecting to the product for use.
- Peripheral devices are sold separately.
- A keyboard, mouse, or USB device can be connected to the USB port.
- The charging speed may vary depending on the device.
- To use USB Downstream port of monitor, user must connect Upstream port of monitor to Host PC using USB C-C or USB C-A cable.
- When the USB C-C cable is connected between Upstream port of monitor and Host PC, the Downstream port of monitor support USB 2.0 device.
- When the USB C-A cable is connected between Upstream port of monitor and Host PC, the Downstream port of monitor support USB 3.0 device.
  However, Host PC must support USB 3.0 function.

CAUTION

- Cautions When Using a USB Device
  - A USB device with an automatic recognition program installed, or that uses its own driver, may not be recognized.
  - Some USB devices may not be supported or may not work properly.
  - It is recommended to use a USB hub or hard disk drive with power supplied. (If the power supply is not adequate, the USB device may not be recognized properly.)

Headphones Connection

Connect peripherals to the monitor via the headphones port.

NOTE

- Peripheral devices are sold separately.
- Depending on the audio settings of the PC and external device, headphones and speaker functions may be limited.
- If you use angled earphones, it may cause a problem with connecting another external device to the monitor. Therefore, it is recommended to use straight earphones.



Angled



Straight
(Recommend)

USER SETTINGS

NOTE

- Your monitor's OSD (On Screen Display) may differ slightly from that shown in this manual.

Activating the Main Menu



Joystick Button

1. Press the joystick button on the bottom of the monitor.
2. Move the joystick up/down and left/right to set the options.
3. Press the joystick button once more to exit the main menu.

Button	Menu Status		Description
	**Main menu disabled**		Enables the main menu.
	Main menu enabled		Exits the main menu. (Holding down the button more than 3 seconds to turn off the monitor. You can turn off the monitor this way at any time, including when the OSD is on.)
	◄	**Main menu disabled**	Adjusts the monitor volume level.
		Main menu enabled	Enters the **Input** features.
	►	**Main menu disabled**	Adjusts the monitor volume level.
		Main menu enabled	Enters the **Settings** feature.
	▲	**Main menu disabled**	Displays the information on the current input.
		Main menu enabled	Turns off the monitor.
	▼	**Main menu disabled**	Displays the information on the current input.
		Main menu enabled	Enters the **Picture Mode** feature.

Main Menu Features

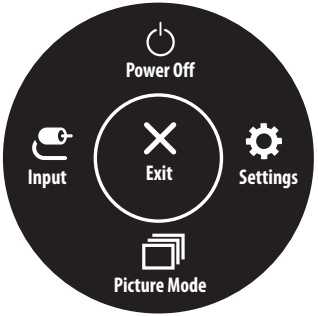

Main Menu	Description
Input	Sets input mode.
Power Off	Turns off the monitor.
Settings	Configures the screen settings.
Picture Mode	Sets the picture mode.
Exit	Exits the main menu.

Menu Settings

1 To view the OSD menu, press the joystick button at the bottom of the monitor and then enter the **Settings**.
2 Move the joystick up/down and left/right to set the options.
3 To return to the upper menu or set other menu items, move the joystick to ◀ or pressing ( ) it.
4 If you want to exit the OSD menu, move the joystick to ◀ until you exit.



Quick Settings **Input** **Picture** **Sound** **General**

Quick Settings

Settings > Quick Settings	Description	
Brightness	Adjusts the contrast and brightness of the screen.	
Contrast		
Volume	Adjusts the volume.	
	NOTE • You can adjust **Mute** / **Unmute** by moving the joystick button to ▼ in the Volume menu.	
Color Temp	**Custom**	The user can adjust it to red, green, or blue by customization.
	Warm	Sets the screen color to a reddish tone.
	Medium	Sets the screen color between a red and blue tone.
	Cool	Sets the screen color to a bluish tone.
	Manual	The user can fine-tune the color temperature.
MaxxAudio	**On**	MaxxAudio® by waves, recipient of a Technical GRAMMY Award® is a suite of studio-quality sound tools for a superior listening experience.
	Off	Disables the MaxxAudio function.

Input

Settings > Input	Description	
Input List	Selects the input mode.	
Aspect Ratio	Adjusts the aspect ratio of the screen.	
	Full Wide	Displays the video in widescreen, regardless of the video signal input.
	Original	Displays video according to the aspect ratio of the video signal input.
	Just Scan	The aspect ratio is not adjusted from the original.
	NOTE • The display may look the same for Full Wide , Original, and Just Scan options at the recommended resolution (3840 x 2160). • There is no **Just Scan** menu on **FreeSync** Mode. (Go to **Picture** → **Game Adjust** → **FreeSync**, to set from **FreeSync Basic** or **Extended** to **Off**)	

Picture

NOTE

- The **Picture Mode** that can be set depends on the Input signal.

[Picture Mode on SDR (Non-HDR) signal]

Settings > Picture	Description	
Picture Mode	**Custom**	Allows the user to adjust each element.
	Vivid	Heightens contrast, brightness and sharpness to display vivid images.
	HDR Effect	Optimizes the screen for high dynamic range.
	Reader	Optimizes the screen for viewing documents. You can brighten the screen in the OSD menu.
	Cinema	Optimizes the screen for video.
	FPS	This mode is optimized for FPS games.
	RTS	This mode is optimized for RTS Game.
	Color Weakness	This mode is for users who cannot distinguish between red and green. It enables users with color weakness to easily distinguish between the two colors.
	EBU	A standard TV PAL color space for broadcasting.
	REC709	A standard HDTV color space for broadcasting.
	SMPTE-C	A standard TV NTSC color space for broadcasting.
	Calibration 1	Adjusts to the last calibrated screen.
	Calibration 2	Adjusts to the previously calibrated screen.
	NOTE • If the **Picture Mode** is changed in the DP (DisplayPort) input, the screen may flicker or the resolution of your PC screen may be affected. • **Calibration 2** : Installation of TRUE COLOR PRO and proceeding **Calibration** will enable this menu.	

[Picture Mode on HDR signal]

Settings > Picture	Description	
Picture Mode	**Custom**	Allows the user to adjust each element.
	Vivid	Optimized the screen for HDR vivid colors.
	Standard	Optimized the screen for HDR standard.
	Cinema	Optimized the screen for HDR video.
	FPS	This mode is optimized for FPS games.It is suitable for very dark FPS games.
	RTS	This mode is optimized for RTS Game.
	NOTE • HDR content may not display correctly depending on Window10 OS settings, please check HDR On/Off settings in Windows. • When the HDR function is turned on, the characters or picture quality may be poor according to Graphic card performance. • While the HDR function is on, screen flickering or cracking may occur when changing the monitor input or power on/off according to Graphic card performance.	

Settings > Picture	Description		
Picture Adjust	**Brightness**	Adjusts the contrast and brightness of the screen.	
	Contrast		
	Sharpness	Adjusts the sharpness of the screen.	
	SUPER RESOLUTION+	**High**	Optimizes the screen for crystal clear images. Best for high-definition video or games.
		Middle	Optimizes the screen for comfortable viewing, with images at the middle level between the low and high modes. Best for UCC or SD videos.
		Low	Optimizes the screen for smooth and natural images. Best for still images or images with less movement.
		Off	Displays in the most common setting. Disables **SUPER RESOLUTION+**.
		NOTE • Because this is a function to increase the sharpness of low resolution pictures, it is not recommended to use the function for normal text or for desktop icons. Doing so may result in unnecessarily high sharpness.	
	Black Level	Sets the offset level (for HDMI only). • Offset: as a reference for a video signal, this is the darkest color the monitor can display.	
		High	Keeps the current contrast ratio of the screen.
		Low	Lowers the black levels and raises the white levels from the current contrast ratio of the screen.
	DFC	**On**	Adjusts the brightness automatically according to the screen.
		Off	Disables the **DFC** feature.

Settings > Picture	Description		
Game Adjust	Response Time	Sets a response time for displayed pictures based on the movement of the picture on the screen. For a normal environment, it is recommended that you use **Fast**. When there is a lot of motion, it is recommended that you use **Faster**. Setting to **Faster** may cause image sticking.	
		Faster	Sets the response time to faster.
		Fast	Sets the response time to fast.
		Normal	Sets the response time to normal.
		Off	Does not use the response time improvement feature.
	FreeSync	Provides seamless and natural images by synchronizing the vertical frequency of the input signal with that of the output signal. ⚠ **CAUTION** • Supported Interface: DisplayPort,HDMI. • Supported Graphic Card : A graphic card that supports AMD's FreeSync is necessary. • Supported Version : Make sure to update the graphic card to the latest driver. • For more information and requirement, refer to AMD website at http://www.amd.com/FreeSync	
		Extended	Enable wider frequency range of FreeSync function than basic mode. The screen may flicker during the game play.
		Basic	Enable basic frequency range of FreeSync function.
		Off	FreeSync function off.
	Black Stabilizer	You can control the black contrast to have better visibility in dark scenes. Increasing the **Black Stabilizer** value brightens the low gray level area on the screen. (You can easily distinguish objects on dark game screens.) Reducing the **Black Stabilizer** value darkens the low gray level area and increases the dynamic contrast on the screen.	

Settings > Picture	Description		
Color Adjust	**Gamma**	**Mode 1, Mode 2, Mode 3**	The higher the gamma value, the darker the image becomes. Likewise, the lower the gamma value, the lighter the image becomes.
		Mode 4	If you do not need to adjust the gamma settings, select **Mode 4**.
	Color Temp	Set your own color temperature.	
		Custom	The user can adjust it to red, green, or blue by customization.
		Warm	Sets the screen color to a reddish tone.
		Medium	Sets the screen color to between a red and blue tone.
		Cool	Sets the screen color to a bluish tone.
		Manual	The user can fine-tune the color temperature.
	Red/Green/Blue	You can customize the picture color using red, green, and blue colors.	
	Six Color	Meets the user requirements for colors by adjusting the hue and saturation of the six colors (red, green, blue, cyan, magenta, and yellow) and then saving the settings.	
		Hue	Adjusts the tone of the screen colors.
		Saturation	Adjusts the saturation of the screen colors. The lower the value, the less saturated and brighter the colors become. The higher the value, the more saturated and darker the colors become.
Picture Reset	**Do you want to reset your picture settings?**	**No**	Cancel the select.
		Yes	Returns to the default settings.

Sound

Settings > Sound	Description	
Volume	Adjusts the volume level. **NOTE** • You can adjust **Mute / Unmute** by moving the joystick button to▼ in the **Volume** menu.	
MaxxAudio	**On**	MaxxAudio® by waves, recipient of a Technical GRAMMY Award® is a suite of studio-quality sound tools for a superior listening experience.
	Off	Disables the **MaxxAudio** function.

General

<table>
<tr><th>Settings > General</th><th colspan="2">Description</th></tr>
<tr><td>Language</td><td colspan="2">Sets the menu screen to the desired language.</td></tr>
<tr><td rowspan="5">SMART ENERGY SAVING</td><td colspan="2">Conserve energy by using luminance compensation algorithm.</td></tr>
<tr><td>High</td><td>Saves energy using the high-efficiency SMART ENERGY SAVING feature.</td></tr>
<tr><td>Low</td><td>Saves energy using the low-efficiency SMART ENERGY SAVING feature.</td></tr>
<tr><td>Off</td><td>Disables the feature.</td></tr>
<tr><td colspan="2">NOTE
• The value of energy saving data may differ depending on panel and panel suppliers.
• If you select the option of SMART ENERGY SAVING is High or Low, monitor luminance become lower or higher depend on source.</td></tr>
<tr><td rowspan="4">Power LED</td><td colspan="2">Turns the power LED on the bottom of the monitor on or off.</td></tr>
<tr><td>On</td><td>The power LED turns on automatically.</td></tr>
<tr><td>Off</td><td>The power LED turns off.</td></tr>
<tr><td colspan="2">NOTE
• When the Power LED function is turned on, it operates as follows:
- On Mode: White
- Sleep Mode (Standby Mode): White Blinking
- Off Mode: Off</td></tr>
<tr><td>Automatic Standby</td><td colspan="2">Feature that automatically turns off the monitor when there is no movement on the screen for a period of time. You can set a timer for the auto-off function.
(Off, 4 H, 6 H, and 8 H)</td></tr>
<tr><td>DisplayPort Version</td><td colspan="2">Set DisplayPort Version to the same version as the connected external device. (1.4, 1.2, and 1.1)
To use the HDR function, set to 1.4.</td></tr>
</table>

<table>
<tr><th>Settings > General</th><th colspan="4">Description</th></tr>
<tr><td rowspan="8">HDMI ULTRA HD Deep Color</td><td colspan="4">Provides sharper images when connected to a device supporting ULTRA HD Deep Color.</td></tr>
<tr><td colspan="4">4K@ 60 Hz Support Format</td></tr>
<tr><td rowspan="2">Resolution</td><td rowspan="2">Frame rate(Hz)</td><td colspan="2">Color Depth / Chroma Sampling</td></tr>
<tr><td>8 bit</td><td>10 bit</td></tr>
<tr><td rowspan="4">3840 x 2160</td><td rowspan="4">59.94
60.00</td><td colspan="2">YCbCr 4:2:0</td></tr>
<tr><td colspan="2">YCbCr 4:2:2</td></tr>
<tr><td>YCbCr 4:4:4</td><td>-</td></tr>
<tr><td>RGB 4:4:4</td><td>-</td></tr>
<tr><td colspan="4">NOTE
• To use HDMI ULTRA HD Deep Color, turn this function "On".
• If the connected device does not support Deep Color, the screen or sound may not work properly. In this case, set this function to off.
• The HDMI ULTRA HD Deep Color function can be set individually for each HDMI port.
• To use the HDR function, set HDMI ULTRA HD Deep Color to "On".</td></tr>
<tr><td rowspan="3">Buzzer</td><td colspan="4">This feature lets you set the sound generated from Buzzer when your monitor powers on.</td></tr>
<tr><td>On</td><td colspan="3">Enables your monitor's Buzzer.</td></tr>
<tr><td>Off</td><td colspan="3">Disables your monitor's Buzzer.</td></tr>
<tr><td rowspan="4">OSD Lock</td><td colspan="4">This feature disables the configuration and adjustment of menus.</td></tr>
<tr><td>On</td><td colspan="3">Enables OSD Lock.</td></tr>
<tr><td>Off</td><td colspan="3">Disables OSD Lock.</td></tr>
<tr><td colspan="4">NOTE
• The menus except the menus below are disabled.
- Brightness
- Contrast
- Volume
- Input List
- Aspect Ratio
- OSD Lock
- Information</td></tr>
</table>

Settings > General	Description	
OSD Size	User can select OSD Size to Large or Small.	
Deep Sleep Mode	When Deep sleep mode is enabled, power consumption is minimized while the monitor is in standby mode.	
	On	Enables **Deep sleep Mode**.
	Off	Disables **Deep sleep Mode**.
	NOTE • USB HUB functions will not work in standby mode while Deep sleep Mode is enabled in standby mode.	
Information	The following display information will be shown; **Serial Number**, **Total Power On Time**, **Resolution**.	
Reset to Initial Settings	Do you want to reset your settings?	
	No	Cancel the reset.
	Yes	Returns to the default settings.

TROUBLESHOOTING

Nothing is displayed on the screen.	
Is the monitor's power cord plugged in?	• Check if the power cord is correctly plugged into the power outlet.
Is the power LED on?	• Check the power cable connection and press the power button.
Is the power on and the power LED displaying white?	• Check that the connected input is enabled (**Settings** > **Input**).
Is the **No Signal** message being displayed?	• This is displayed when the signal cable between the PC and the monitor is missing or disconnected. Check the cable and reconnect it.
Is the **Out of Range** message being displayed?	• This occurs when signals transferred from the PC (graphics card) are out of the horizontal or vertical frequency range of the monitor. Please see the Product Specification section of this manual to set the appropriate frequency.
Screen display is unstable and shaky. / Images displayed on the monitor leave shadow trails.	
Did you select the appropriate resolution?	• If the selected resolution is HDMI 1080i 60/50 Hz (interlaced), the screen may be flickering. Change the resolution to 1080p or the recommended resolution. • Not setting the graphics card to the recommended (optimal) resolution may result in blurred text, a dimmed screen, a truncated display area or misalignment of the display. • The setting methods may be different depending on the computer or operating system, and some resolutions may not be available depending on the performance of the graphics card. If this is the case, contact the manufacturer of the computer or graphics card for assistance.
Does image sticking occur even when the monitor is turned off?	• Displaying a still image for a prolonged time may cause damage to the screen, resulting in the retention of the image. • To extend the lifetime of the monitor, use a screensaver.
Are there spots on the screen?	• When using the monitor, pixilated spots (red, green, blue, white, or black) may appear on the screen. This is normal for an LCD screen. It is not an error, nor is it related to the monitor's performance.
Some features are disabled.	
Are some functions not available when you press the Menu button?	• The OSD is locked. Disable **OSD Lock** in **General**.

Do you see an "Unrecognized monitor, Plug and Play (VESA DDC) monitor found" message?	
Have you installed the display driver?	• Be sure to install the display driver from our web site: *http://www.lg.com*. • Make sure to check if the graphics card supports Plug and Play function.
No sound from the headphone port.	
Are images displayed without sound?	• Make sure that the headphone port connections are made properly. • Try increasing the volume with the joystick. • Set the audio output of the PC to the monitor you are using. (The settings may differ depending on the operating system (OS) you use.)

NOTE

- LED can be lighted with Set OSD Menu.
  Settings – General – Power LED – On

PRODUCT SPECIFICATION

Color Depth	8-bit / 10-bit color is supported.		
Resolution	Max Resolution	3840 x 2160 @ 60 Hz	
	Recommended Resolution	3840 x 2160 @ 60 Hz	
Power Sources	Power Rating	19 V ⎓ 7.0 A	
	Power Consumption	On mode: 25 W Typ. (ENERGY STAR® standard) * Sleep Mode (Standby Mode) ≤ 0.5 W (HDMI / DP input Condition) ** Off Mode ≤ 0.3 W	
AC/DC adaptor	Output: 19 V ⎓ 7.37 A		
Environmental Conditions	Operating Conditions	Temperature	0 °C to 40 °C
		Humidity	Less than 80 %
	Storing Conditions	Temperature	-20 °C to 60 °C
		Humidity	Less than 85 %
Dimensions	Monitor Size (Width x Height x Depth)		
	With Stand	613.1 x 726 x 400.2 (mm)	
	Without Stand	613.1 x 364.4 x 44.6 (mm)	
Weight (Without Packaging)	With Stand	7.8 kg	
	Without Stand	4.0 kg	

The specifications are subject to change without notice.

The ~ symbol means alternating current, and the ⎓ symbol means direct current.

The power consumption level can be different by operating condition and monitor setting.

* The On mode power consumption is measured with ENERGY STAR® test standard.

** In case of USB-C input, the power consumption of Sleep Mode may vary depending on the connected device.

** The monitor goes to the Sleep Mode in a couple of minutes(Max 5 minutes).

Factory Support Mode (Preset Mode, PC)

DisplayPort/ USB-C

Preset Mode	Horizontal Frequency (kHz)	Vertical Frequency (Hz)	Polarity (H/V)	Remarks
640 x 480	31.469	59.94	-/-	
800 x 600	37.879	60.317	+/+	
1024 x 768	48.363	60	-/-	
1152 x 864	54.347	60.05	+/+	
1280 x 720	45.00	60.00	+/+	
1280 x 800	49.702	59.810	-/+	
1280 x 1024	63.981	60.02	+/+	
1600 x 900	60.00	60.00	+/+	
1920 x 1080	67.5	60	+/-	
2560 x 1440	88.79	59.95	+/-	
3840 x 2160	66.66	30	+/-	
3840 x 2160	133.32	60	+/-	DP/USB-C Preferred timing

HDMI

Preset Mode	Horizontal Frequency (kHz)	Vertical Frequency (Hz)	Polarity (H/V)	Remarks
640 x 480	31.469	59.94	-/-	
800 x 600	37.879	60.317	+/+	
1024 x 768	48.363	60	-/-	
1152 x 864	54.347	60.05	+/+	
1280 x 720	45.00	60.00	+/+	
1280 x 800	49.702	59.810	-/+	
1280 x 1024	63.981	60.02	+/+	
1600 x 900	60.00	60.00	+/+	
1920 x 1080	67.5	60	+/-	
2560 x 1440	88.79	59.95	+/-	
3840 x 2160	67.5	30	+/-	HDMI Preferred timing, **HDMI ULTRA HD Deep Color** : **Off**
3840 x 2160	135	60	+/-	HDMI Preferred timing, **HDMI ULTRA HD Deep Color** : **On**

LG
Life's Good

The model and serial number of the product are located on the back and on one side of the product.
Record them below in case you ever need service.

Model _____

Serial No. _____

ENERGY STAR

This Product qualifies for ENERGY STAR®

Changing the factory default configuration and settings or enabling certain optional features and functionalities may increase energy consumption beyond the limits required for ENERGY STAR® certification.

Refer to ENERGYSTAR.gov for more information on the ENERGY STAR® program.