OWNER'S MANUAL

LED LCD MONITOR

(LED Monitor*)

* LG LED Monitor applies LCD screen with LED backlights.
Please read this manual carefully before operating your set and retain it for future reference.

24MS530B 24MS570B
27MS530B 27MS570B

www.lg.com

Copyright © 2024 LG Electronics Inc. All Rights Reserved.

ENGLISH

TABLE OF CONTENTS

LICENSE 2

ASSEMBLING AND PREPARING 3

USING THE MONITOR..... 10

USER SETTINGS 13

TROUBLESHOOTING 21

PRODUCT SPECIFICATION..... 22

LICENSE

Each model has different licenses. Visit *www.lg.com* for more information on the license.

The terms HDMI, HDMI High-Definition Multimedia Interface, HDMI trade dress and the HDMI Logos are trademarks or registered trademarks of HDMI Licensing Administrator, Inc.

* USB Type-C™ and USB-C™ are trademarks of USB Implementers Forum.

ASSEMBLING AND PREPARING

CAUTION

- Always use genuine LG components to ensure safety and product performance.
- The product warranty will not cover damage or injury caused by the use of unauthorized components.
- It is recommended that use the supplied components.
- If you use generic cables not certified by LG, the screen may not display or there may be image noises.
- Illustrations in this document represent typical procedures, so they may look different from the actual product.
- Do not apply foreign substances (oils, lubricants, etc.) to the screw parts when assembling the product. (Doing so may damage the product.)
- Applying excessive force when tightening screws may cause damage to the monitor. Damage caused in this way will not be covered by the product warranty.
- Do not carry the monitor upside down by just holding the base. This may cause the monitor to fall off the stand and could result in personal injury.
- When lifting or moving the monitor, do not touch the monitor screen. The force applied to the monitor screen may cause damage to it.

NOTE

- The components may look different from those illustrated here.
- Without prior notice, all product information and specifications contained in this manual are subject to change to improve the performance of the product.
- To purchase optional accessories, visit an electronics store or an online shopping site, or contact the retailer from which you purchased the product.
- The power cord provided may differ depending upon the region.

Supported Drivers and Software

You can download and install the latest version from the LGE website (*www.lg.com*).

Drivers and Software	Installation Priority
Monitor Driver	Recommended
LG Switch	Recommended

Product and Button Description

24MS530B | 27MS530B

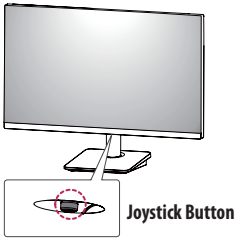

24MS570B | 27MS570B

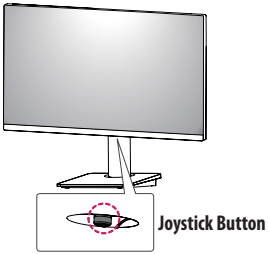

How to Use the Joystick Button

You can easily control the functions of the monitor by pressing the joystick button or moving it left/right/up/down with your finger.

Basic Functions

	⏻	**Power on**	Press the joystick button once with your finger to turn on the monitor.
		Power off	Press and hold the joystick button once with your finger to turn off the monitor.
	◄/►	**Volume control**	You can control the volume by moving the joystick button left/right.
	▲/▼	**Controls screen brightness**	You can control the screen's brightness by moving the joystick button up/down.

NOTE

- The joystick button is located at the bottom of the monitor.

Moving and Lifting the Monitor

When moving or lifting the monitor, follow these instructions to prevent the monitor from being scratched or damaged and to ensure safe transportation, regardless of its shape or size.

- Place the monitor in the original box or packing material before attempting to move it.
- Before moving or lifting the monitor, disconnect the power cord and all other cables.
- Hold the bottom and side of the monitor frame firmly. Do not hold the panel itself.
- When holding the monitor, the screen should face away from you to prevent it from being scratched.
- When transporting the monitor, do not expose the monitor to shock or excessive vibration.
- When moving the monitor, keep it upright and never turn the monitor on its side or tilt it sideways.

24MS530B 27MS530B

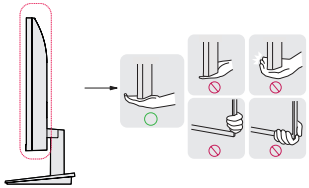

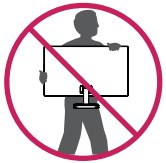

24MS570B 27MS570B

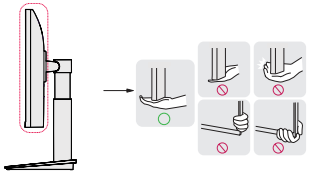

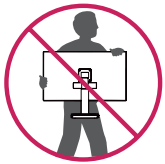

CAUTION

- Avoid touching the monitor screen as much as possible.
  - This may result in damage to the screen or some of the pixels used to create images.

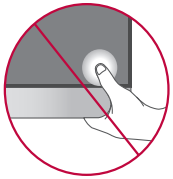

- If you use the monitor panel without the stand base, its joystick button may cause the monitor to become unstable and fall, resulting in damage to the monitor or human injury. In addition, this may cause the joystick button to malfunction.

ENGLISH

Installing on a Table

- Lift the monitor and place it on the table in an upright position. Place the monitor at least 100 mm away from the wall to ensure sufficient ventilation.

24MS530B 27MS530B

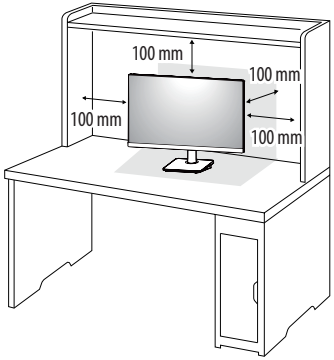

24MS570B 27MS570B

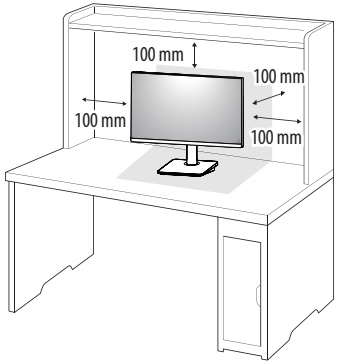

CAUTION

- Unplug the power cord before moving or installing the monitor. There is risk of electric shock.
- Make sure to use the power cord that is provided in the product package and connect it to a grounded power outlet.
- If you need another power cord, please contact your local dealer or the nearest retail store.

Adjusting the Stand Height

24MS570B 27MS570B

1 Place the monitor mounted on the stand base in an upright position.
2 Handle the monitor with both hands for safety.

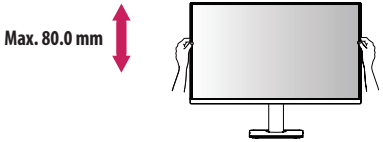

WARNING

- When adjusting the screen height, do not place your hand on the stand body to avoid injury to your fingers.

Adjusting the Angle

1 Place the monitor mounted on the stand base in an upright position.

2 Adjust the angle of the screen.

The angle of the screen can be adjusted forward or backward from -5° to 15° for a comfortable viewing experience.

WARNING

- To avoid injury to the fingers when adjusting the screen, do not hold the lower part of the monitor's frame as illustrated below.
- Be careful not to touch or press the screen area when adjusting the angle of the monitor.

24MS530B | 27MS530B

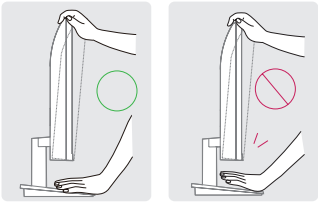

24MS570B | 27MS570B

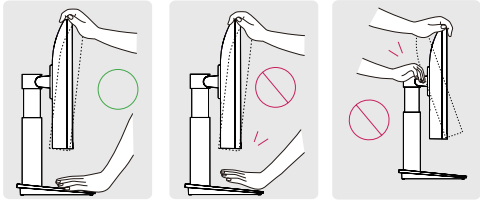

Using the Kensington Lock

The Kensington security system connector is located at the back of the Monitor set.

For more information on installation and usage, refer to the Kensington lock owner's manual or visit the website at *http://www.kensington.com*.

Connect the monitor to a table using the Kensington security system cable.

24MS530B | 27MS530B

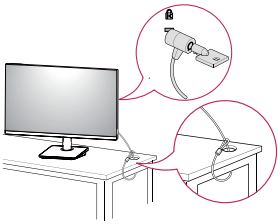

24MS570B | 27MS570B

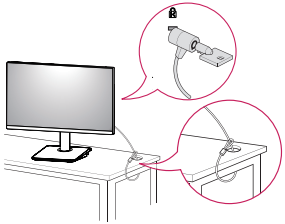

NOTE

- The Kensington security system is optional. You can obtain optional accessories from most electronics stores.

ENGLISH

Installing the Wall Mount Plate

This monitor meets the specifications for the wall mount plate or other compatible devices.

NOTE

- The wall mount plate is sold separately.
- For more information on installation, refer to the wall mount plate's installation guide.
- Be careful not to apply too much force while mounting the wall mount plate as it may cause damage to the screen.
- Remove the stand before installing the monitor on a wall mount by performing the stand attachment in reverse.

Installing on the Wall

Install the monitor at least 100 mm away from the wall and leave about 100 mm of space at each side of the monitor to ensure sufficient ventilation. Detailed installation instructions can be obtained from your local retail store. Alternatively, please refer to the manual for how to install and set up a tilting wall mounting bracket.

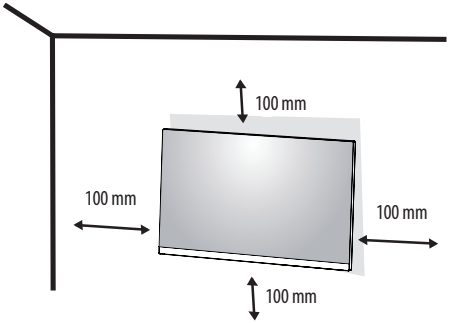

To install the monitor to a wall, attach a wall mounting bracket (optional) to the back of the monitor.
Make sure that the wall mounting bracket is securely fixed to the monitor and to the wall.

Wall Mount (mm)	75 x 75
Standard screw	M4 x L10
Number of screws	4
Wall Mount Plate (Optional)	LSW 149 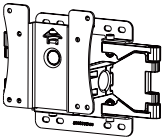

NOTE

- A non-VESA standard screw may damage the product and cause the monitor to fall. LG Electronics is not liable for any accidents relating to the use of non-standard screws.
- The wall mount kit includes the installation guide and all necessary parts.
- The wall mounting bracket is optional. You can obtain optional accessories from your local dealer.
- The length of the screw may differ for each wall mounting bracket. If you use screws longer than the standard length, it may damage the inside of the product.
- For more information, please refer to the user manual for the wall mounting bracket.

CAUTION

- Unplug the power cord before moving or installing the monitor to avoid electric shock.
- Installing the monitor on the ceiling or on a slanted wall may result in the monitor falling off, which could lead to injury. Use an authorized LG wall mount and contact the local dealer or qualified personnel.
- Applying excessive force when tightening screws may cause damage to the monitor. Damage caused in this way will not be covered by the product warranty.
- Use the wall mounting bracket and screws that conform to VESA standards. Damage caused by the use or misuse of inappropriate components will not be covered by the product warranty.
- When measured from the back of the monitor, the length of each installed screw must be 8 mm or less.

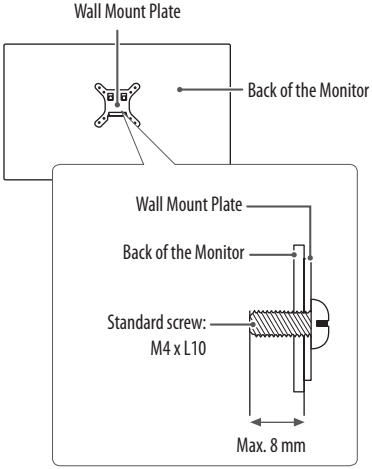

USING THE MONITOR

- Illustrations in this manual may differ from the actual product.

CAUTION

- Do not press the screen for a prolonged time. This may cause image distortion.
- Do not display a still image on the screen for a prolonged time. This may cause image retention. Use a PC screensaver if possible.
- When connecting the power cord to the outlet, use a grounded (3-hole) power strip or a grounded power outlet.
- The monitor may flicker when turned on in an area where the temperature is low. This is normal.
- Sometimes red, green, or blue spots may appear on the screen. This is normal.

Connecting to a PC

- This monitor supports the *Plug and Play feature.

* Plug and Play: A feature that allows you to add a device to your computer without having to reconfigure anything or install any manual drivers.

HDMI Connection

Transmits digital video and audio signals from your PC to the monitor.

CAUTION

- Using a DVI to HDMI / DP (DisplayPort) to HDMI cable may cause compatibility issues.
- Use a certified cable with the HDMI logo attached. If you do not use a certified HDMI cable, the screen may not display or a connection error may occur.
- Recommended HDMI cable types
  - High-Speed HDMI®/™ cable
  - High-Speed HDMI®/™ cable with Ethernet

24MS530B | 27MS530B

USB-C connection

Transmits digital video and audio signals from your PC to the monitor.

NOTE

- DP Alternate Mode (DP over USB-C) are supported via USB-C Port.
- Features may not work properly depending on the connected device's specifications and the environment.
- USB-C port is not for the Monitor Power source.
  Connect Adapter to supply power to the Monitor

Connecting AV Devices

HDMI Connection

HDMI transmits digital video and audio signals from your AV device to the monitor.

NOTE

- Using a DVI to HDMI / DP (DisplayPort) to HDMI cable may cause compatibility issues.
- Use a certified cable with the HDMI logo attached. If you do not use a certified HDMI cable, the screen may not display or a connection error may occur.
- Recommended HDMI cable types
  - High-Speed HDMI®/™ cable
  - High-Speed HDMI®/™ cable with Ethernet

Connecting Peripherals

24MS570B | 27MS570B

USB Device connection

The USB port on the product functions as a USB hub.

NOTE

- It is recommended you install all Windows Updates to keep your Windows up-to-date before connecting to the product for use.
- Peripheral devices are sold separately.
- A keyboard, mouse, or USB device can be connected to the USB port.
- The charging speed may vary depending on the device.
- To use USB Downstream port of monitor, user must connect Upstream port of monitor to Host PC using USB C-C or USB C-A cable.
- When the USB C-C cable is connected between Upstream port of monitor and Host PC, the Downstream port of monitor support USB 2.0 device.

CAUTION

Cautions When Using a USB Device

- A USB device with an automatic recognition program installed, or that uses its own driver, may not be recognized.
- Some USB devices may not be supported or may not work properly.
- It is recommended to use a USB hub or hard disk drive with power supplied. (If the power supply is not adequate, the USB device may not be recognized properly.)

Connecting Headphones

Connect peripherals to the monitor via the headphones port.

NOTE

- Peripheral devices are sold separately.
- If you use angled earphones, it may cause a problem with connecting another external device to the monitor. Therefore, it is recommended to use straight earphones.

Angled

Straight
(Recommend)

- Depending on the audio settings of the PC and external device, headphones and speaker functions may be limited.

USER SETTINGS

NOTE

- Your monitor's OSD (On Screen Display) may differ slightly from that shown in this manual.

Activating the Main Menu

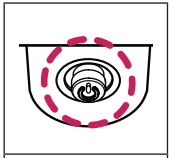

Joystick Button

1 Press the joystick button on the bottom of the monitor.
2 Move the joystick up/down and left/right to set the options.
3 Press the joystick button once more to exit the main menu.

Button	Menu Status		Description
	Main menu disabled		Enables the main menu.
	Main menu enabled		Exits the main menu. (Holding down the button to turn off the monitor. You can turn off the monitor this way at any time, including when the OSD is on.)
	◄	**Main menu disabled**	Adjusts the monitor volume level.
		Main menu enabled	Enters the **Input** features.
	►	**Main menu disabled**	Adjusts the monitor volume level.
		Main menu enabled	Enters the **Settings** feature.
	▲	**Main menu disabled**	Adjusts the monitor brightness level.
		Main menu enabled	Turns off the monitor.
	▼	**Main menu disabled**	Adjusts the monitor brightness level.
		Main menu enabled	Enters the **Picture Mode** feature.

Main Menu Features

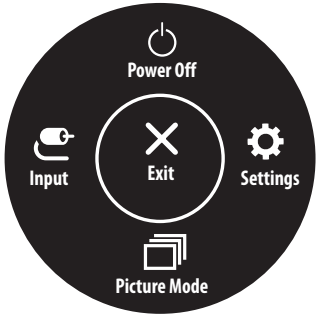

Main Menu	Description
Input	Sets input mode.
Power Off	Turns off the monitor.
Settings	Configures the screen settings.
Picture Mode	Sets the picture mode.
Exit	Exits the main menu.

Menu Settings

1 To view the OSD menu, press the joystick button at the bottom of the monitor and then enter the **Settings**.
2 Move the joystick up/down and left/right to set the options.
3 To return to the upper menu or set other menu items, move the joystick to ◀ or pressing ( ) it.
4 If you want to exit the OSD menu, move the joystick to ◀ until you exit.

Quick Settings

Input

Picture

General

Customizing settings

Quick Settings

Settings > Quick Settings	Description	
Brightness	Adjusts the brightness of the screen.	
Contrast	Adjusts the contrast of the screen.	
Volume	Adjusts the volume level.	
Color Temp	**Custom**	The user can adjust it to red, green, or blue by customization.
	Warm	Sets the screen color to a reddish tone.
	Medium	Sets the screen color between a red and blue tone.
	Cool	Sets the screen color to a bluish tone.

Input

Settings > Input	Description	
Input List	Selects the input mode.	
Aspect Ratio	Adjusts the aspect ratio of the screen.	
	Full Wide	Displays the video in wide-screen, regardless of the video signal input.
	Original	Displays video according to the aspect ratio of the video signal input.
	NOTE • The options may disabled at the recommended resolution (1920 x 1080).	
Auto Input Switch	**On**	Enables **Auto Input Switch**.
	Off	Disables **Auto Input Switch**.

ENGLISH

Picture

Settings > Picture	Description	
Picture Mode	**Custom**	Allows the user to adjust each element.
	Vivid	Heightens contrast, brightness and sharpness to display vivid images.
	Reader	Optimizes the screen for viewing documents. You can brighten the screen in the OSD menu.
	Cinema	Optimizes the screen for video.
	FPS	This mode is optimized for FPS games.
	RTS	This mode is optimized for RTS Game.
	Color Weakness	This mode is for users who cannot distinguish between red and green. It enables users with color weakness to easily distinguish between the two colors.

NOTE

- If the **Picture Mode** is changed, the screen may flicker or the resolution of your PC screen may be affected.
- This is subsidiary for color weakness user. Therefore if you feel uncomfortable with the screen, please turn off this function.
- This function can't distinguish some colors in some images.

Settings > Picture	Description		
Picture Adjust	**Brightness**	Adjusts the brightness of the screen.	
	Contrast	Adjusts the contrast of the screen.	
	Sharpness	Adjusts the sharpness of the screen.	
	SUPER RESOLUTION+	**High**	Optimized picture quality is displayed when a user wants crystal clear images. It is effective for high quality video or game.
		Middle	The optimized picture quality is displayed when a user wants images between low and high modes for comfortable viewing. It is effective for UCC or SD video.
		Low	The optimized picture quality is displayed when a user wants smooth and natural images. It is effective for slow-moving pictures or still images.
		Off	Select this option for everyday viewing. SUPER RESOLUTION+ is turned off in this mode.
		NOTE • Because this is a function to increase the sharpness of low resolution pictures, it is not recommended to use the function for normal text or for desktop icons. Doing so may result in unnecessarily high sharpness.	
	Black Level	Sets the offset level. • Offset: as a reference for a video signal, this is the darkest color the monitor can display.	
		High	Keeps the current contrast ratio of the screen.
		Low	Lowers the black levels and raises the white levels from the current contrast ratio of the screen.
	DFC	**On**	Adjusts the brightness automatically according to the screen.
		Off	Disables the DFC feature.

Game Adjust	**Response Time**	Sets a response time for displayed pictures based on the speed of the screen. For a normal environment, it is recommended that you use **Fast**. For a fast-moving picture, it is recommended that you use **Faster**. Once **Faster Mode** is selected, **Motion Blur** may occur depending on the content.	
		Faster	Sets the response time to **faster**.
		Fast	Sets the response time to **fast**.
		Normal	Sets the response time to **normal**.
		Off	Does not use the response time improvement feature.
	Black Stabilizer	You can control the black contrast to have better visibility in dark scenes. Increasing the Black Stabilizer value brightens the low gray level area on the screen. (You can easily distinguish objects on dark game screens.) Reducing the Black Stabilizer value darkens the low gray level area and increases the dynamic contrast on the screen.	
	Crosshair	Crosshair provides a mark on the center of the screen for First Person Shooter (FPS) games. Users can select the Crosshair that fits their gaming environment among four different cross hairs.	
Color Adjust	**Gamma**	**Mode 1**	The higher the gamma value, the darker the image becomes. Likewise, the lower the gamma value, the lighter the image becomes.
		Mode 2	
		Mode 3	
		Mode 4	If you do not need to adjust the gamma settings, select Mode 4.
	Color Temp	Selects the factory default picture color. Custom: The user can adjust it to red, green or blue by customization. Warm: Sets the screen color to a reddish tone. Medium: Sets the screen color between a red and blue tone. Cool: Sets the screen color to a bluish tone.	
	Red	You can customize the picture color using Red, Green, and Blue colors.	
	Green		
	Blue		

Picture Reset	**Do you want to reset your picture settings?**	**No**	Cancel the select.
		Yes	Returns to the default settings.

General

Settings > General	Description		
Language	To choose the language in which the control names are displayed.		
SMART ENERGY SAVING	**High**	Enables SMART ENERGY SAVING you can save energy with this energy- high efficient.	
	Low	Enables SMART ENERGY SAVING you can save energy with this energy- low efficient.	
	Off	Disables SMART ENERGY SAVING .	
	* **SMART ENERGY SAVING** : Conserve energy by using luminance compensation algorithm.		
Deep Sleep Mode (Depending on the model, it may not be supported)	When Deep sleep mode is enabled, power consumption is minimized while the monitor is in standby mode.		
	On	Enables Deep sleep Mode.	
	Off	Disables Deep sleep Mode.	
Automatic Standby	Feature that automatically turns off the monitor when there is no movement on the screen for a period of time. You can set a timer for the auto-off function. (**8H**, **6H**, **4H** and **Off**)		
OSD Lock	Prevents incorrect key input.		
	On	Key input is disabled.	
	NOTE • All function except for the OSD Lock mode, brightness, Contrast, Input, Information and Volume are disabled.		
	Off	Key input is enabled.	
Information	The display information will be shown the **Total Power On Time**, **Resolution**.		
Reset to Initial Settings	**Do you want to reset your settings?**	**No**	Cancel the select.
		Yes	Returns to the default settings.

NOTE

- The value of energy saving data may differ depending on panel and panel suppliers.
- If you select the option of **SMART ENERGY SAVING** is **High** or **Low**, monitor luminance become lower or higher depend on source.

TROUBLESHOOTING

Check the following before calling for service.

No image appears	
Is the power cord of the display connected?	• Check and see if the power cord is connected properly to the power outlet.
Do you see an "Out of Range" message on the screen?	• This message appears when the signal from the PC (video card) is out of horizontal or vertical frequency range of the display. See the 'Specifications' section of this manual and configure your display again.
Do you see a "NO SIGNAL" message on the screen?	• After the monitor is on "NO SIGNAL", the monitor goes to DPM mode. • This is displayed when the signal cable between the PC and the monitor is missing or disconnected. Check the cable and reconnect it.
Can 't you control some functions in OSD?	
Can't you select some menu in OSD?	• You can unlock the OSD controls at any time by entering the OSD lock menu and changing items to off.

⚠ **CAUTION**

- Check **Control Panel ► Display ► Settings** and see if the frequency or the resolution were changed. If yes, readjust the video card to the recommend resolution.
- If the recommended resolution (optimal resolution) is not selected, letters may be blurred and the screen may be dimmed, truncated or biased. Make sure to select the recommend resolution.
- The setting method can differ by computer and O/S (Operation System), and resolution mentioned above may not be supported by the video card performance. In this case, please ask to the computer or the video card manufacturer.

Display image is incorrect	
The screen color is mono or abnormal.	• Check if the signal cable is properly connected and use a screwdriver to fasten if necessary. • Make sure the video card is properly inserted in the slot. • Set the color setting higher than 24 bits (true color) at **Control Panel ► Settings**.
The screen blinks.	• Check if the screen is set to interlace mode and if yes, change it to the recommend resolution.
Do you see an "Unrecognized monitor, Plug&Play (VESA DDC) monitor found" message?	
Have you installed the display driver?	• Be sure to install the display driver from our web site: *http://www.lg.com*. • Make sure to check if the video card supports Plug&Play function.
The screen is flickering.	
Did you select the recommended resolution?	• If the selected resolution is HDMI 1080i 60/50 Hz, the screen may be flickering. Change the resolution to the recommended resolution 1080P.

PRODUCT SPECIFICATION

ENGLISH

24MS530B

Color Depth	8-bit color is supported.		
Resolution	Max Resolution	1920 x 1080 @ 100 Hz	
	Recommended Resolution	1920 x 1080 @ 100 Hz	
Power Sources	Power Rating	19 V ⎓ 5.4 A	
AC/DC adaptor	Type ADS-120QL-19A-3 190110E, manufactured by SHENZHEN HONOR ELECTRONIC, or Type MS-Z5790R190-110D0-E, manufactured by MOSO POWER SUPPLY TECHNOLOGY CO LTD. Output: 19 V ⎓ 5.79 A		
Environmental Conditions	Operating Conditions	Temperature	0 °C to 40 °C
		Humidity	Less than 80 %
	Storing Conditions	Temperature	-20 °C to 60 °C
		Humidity	Less than 85 %
Dimensions	Monitor Size (Width x Height x Depth)		
	With Stand	539.9 x 414.4 x 190.0 (mm)	
	Without Stand	539.9 x 321.4 x 56.2 (mm)	
Weight (Without Packaging)	With Stand	2.6 kg	
	Without Stand	2.3 kg	

Specifications are subject to change without notice.

The symbol ~ means alternating current, and the symbol ⎓ means direct current.

PRODUCT SPECIFICATION

27MS530B

Color Depth	8-bit color is supported.		
Resolution	Max Resolution	1920 x 1080 @ 100 Hz	
	Recommended Resolution	1920 x 1080 @ 100 Hz	
Power Sources	Power Rating	19 V ⎓ 5.4 A	
AC/DC adaptor	Type ADS-120QL-19A-3 190110E, manufactured by SHENZHEN HONOR ELECTRONIC, or Type MS-Z5790R190-110D0-E, manufactured by MOSO POWER SUPPLY TECHNOLOGY CO LTD. Output: 19 V ⎓ 5.79 A		
Environmental Conditions	Operating Conditions	Temperature	0 ℃ to 40 ℃
		Humidity	Less than 80 %
	Storing Conditions	Temperature	-20 ℃ to 60 ℃
		Humidity	Less than 85 %
Dimensions	Monitor Size (Width x Height x Depth)		
	With Stand	612.0 x 454.9 x 190.0 (mm)	
	Without Stand	612.0 x 362.5 x 56.2 (mm)	
Weight (Without Packaging)	With Stand	3.5 kg	
	Without Stand	3.2 kg	

Specifications are subject to change without notice.

The symbol ~ means alternating current, and the symbol ⎓ means direct current.

PRODUCT SPECIFICATION

ENGLISH

24MS570B

Color Depth	8-bit color is supported.		
Resolution	Max Resolution	1920 x 1080 @ 100 Hz	
	Recommended Resolution	1920 x 1080 @ 100 Hz	
Power Sources	Power Rating	19 V ⎓ 5.4 A	
AC/DC adaptor	Type ADS-120QL-19A-3 190110E, manufactured by SHENZHEN HONOR ELECTRONIC, or Type MS-Z5790R190-110D0-E, manufactured by MOSO POWER SUPPLY TECHNOLOGY CO LTD. Output: 19 V ⎓ 5.79 A		
Environmental Conditions	Operating Conditions	Temperature	0 °C to 40 °C
		Humidity	Less than 80 %
	Storing Conditions	Temperature	-20 °C to 60 °C
		Humidity	Less than 85 %
Dimensions	Monitor Size (Width x Height x Depth)		
	With Stand	539.9 x 447.6 x 219.4 (mm)	
	Without Stand	539.9 x 321.4 x 56.2 (mm)	
Weight (Without Packaging)	With Stand	3.2 kg	
	Without Stand	2.4 kg	

Specifications are subject to change without notice.

The symbol ~ means alternating current, and the symbol ⎓ means direct current.

PRODUCT SPECIFICATION

27MS570B

Color Depth	8-bit color is supported.		
Resolution	Max Resolution	1920 x 1080 @ 100 Hz	
	Recommended Resolution	1920 x 1080 @ 100 Hz	
Power Sources	Power Rating	19 V ⎓ 5.4 A	
AC/DC adaptor	Type ADS-120QL-19A-3 190110E, manufactured by SHENZHEN HONOR ELECTRONIC, or Type MS-Z5790R190-110D0-E, manufactured by MOSO POWER SUPPLY TECHNOLOGY CO LTD. Output: 19 V ⎓ 5.79 A		
Environmental Conditions	Operating Conditions	Temperature	0 ℃ to 40 ℃
		Humidity	Less than 80 %
	Storing Conditions	Temperature	-20 ℃ to 60 ℃
		Humidity	Less than 85 %
Dimensions	Monitor Size (Width x Height x Depth)		
	With Stand	612.0 x 492.1 x 219.4 (mm)	
	Without Stand	612.0 x 362.5 x 56.2 (mm)	
Weight (Without Packaging)	With Stand	4.0 kg	
	Without Stand	3.2 kg	

Specifications are subject to change without notice.

The symbol ~ means alternating current, and the symbol ⎓ means direct current.

Factory Support Mode (Preset Mode, PC)

HDMI

Resolution	Horizontal Frequency (kHz)	Vertical Frequency (Hz)	Polarity (H/V)	Remarks
640 x 480	31.469	59.94	-/-	
800 x 600	37.879	60.317	+/+	
1024 x 768	48.363	60.004	-/-	
1280 x 720	45	60	+/+	
1280 x 1024	79.976	75.025	+/+	
1920 x 1080	67.5	60	+/+	
1920 x 1080	66.587	59.934	+/-	
1920 x 1080	83.894	74.973	+/+	
1920 x 1080	110	100	+/-	Recommended timing

USB-C

Resolution	Horizontal Frequency (kHz)	Vertical Frequency (Hz)	Polarity (H/V)	Remarks
640 x 480	31.469	59.94	-/-	
800 x 600	37.879	60.317	+/+	
1024 x 768	48.363	60.004	-/-	
1280 x 1024	79.976	75.025	+/+	
1920 x 1080	67.5	60	+/+	
1280 x 720	45	60	+/+	
1920 x 1080	66.587	59.934	+/-	
1920 x 1080	83.894	74.973	+/+	
1920 x 1080	110	100	+/-	Recommended timing

HDMI Timing (Video)

Factory support mode (Preset Mode)	Horizontal Frequency(kHz)	Vertical Frequency(Hz)	HDMI
480P	31.5	60	0
720P	45.0	60	0
1080P	67.5	60	0 Recommend Mode

The model and serial number of the product are located on the back and on one side of the product.
Record them below in case you ever need service.

Model _____

Serial No. _____