LG
Life's Good

ENGLISH

SIMPLE MANUAL

Portable Bluetooth Speaker

MODELS
PN5/PN5W/PN5G/PN5R

MFL71693110

2007_Rev01

Controller App

Android iOS

www.lg.com

Copyright © 2020 LG Electronics Inc.
All Rights Reserved.

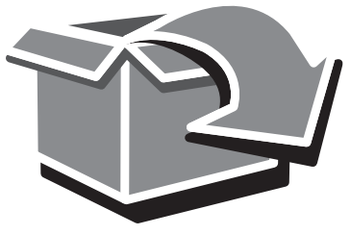

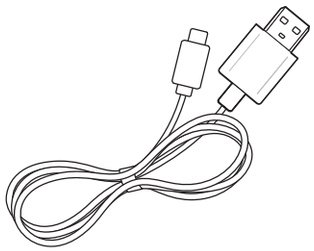



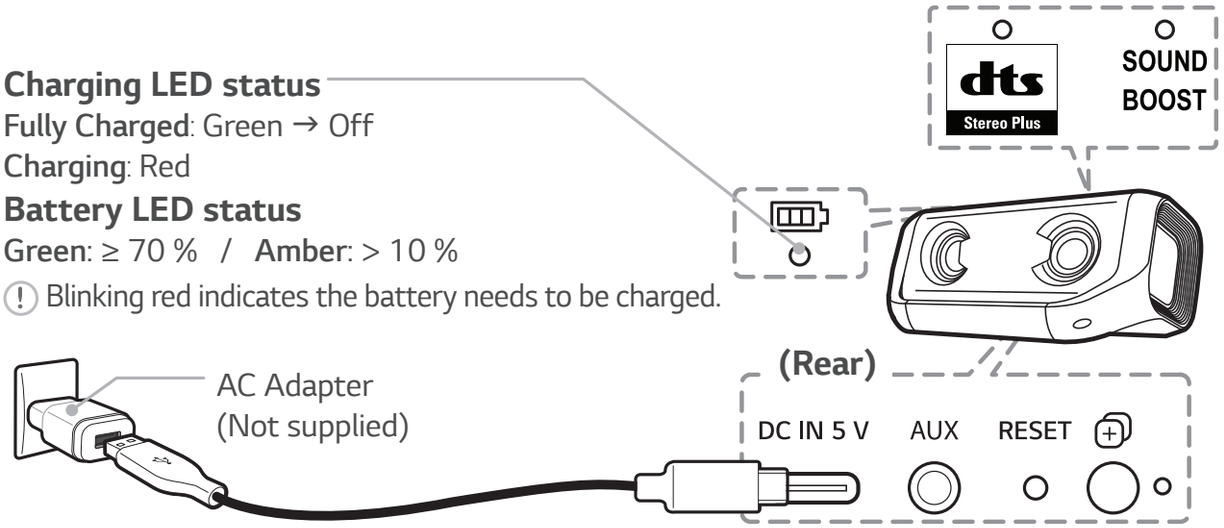

Power	Power On / Off ····· Press ⏻
Battery	Check Battery Status ····· Hold ⏻ for 2 seconds
Bluetooth	To pair your mobile device, select ***LG-PN5(XX)*** from device list. (**Bluetooth** LED: Blink → ON)
	Ready to pair another device ····· Hold ᛒ for 2 seconds
Playback Controls	Play / Pause ····· Press ⏯
	Forward Skip ····· Press ⏯ X 2
	Backward Skip ····· Press ⏯ X 3
Handsfree	Receive / Disconnect ····· Press ⏯
Volume	Volume Control ····· Press — or +

Voice Command	Use voice command of your smart device ····· Press
Mood light	Party → Water → Forest → [My style (Customizing)] → Off ····· Hold for 2 seconds ⓘ To enable My Style option, you have to customize with “LG XBOOM” app.
Sound effect	Change Sound effect ····· Press **dts Stereo Plus** or **SOUND BOOST**
Dual Mode	Press each speaker’s button. (Dual Mode LED: Blink → ON)

Multi phone pairing

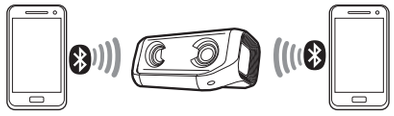

Dual Mode

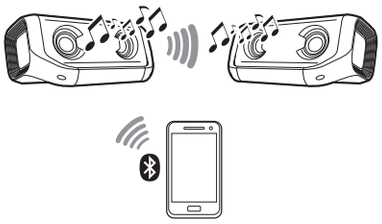

Multi Mode



Using via only "LG XBOOM" app

Specification

Power Supply:
- 5 V ⎓ 2 A (AC Adapter)
- Built-in rechargeable battery

Power consumption: Refer to the main label.
Dimensions (W x H x D):
- Approx. 224.5 mm X 98.5 mm X 125.5 mm

Operating Temperature: 5 °C to 35 °C
Operating Humidity: 5 % to 60 %
Water-proof: IPX5
- Degree of protection against jets of water.

Battery Life: Approx. 18 hours
(Varies by volume level and audio content.)

- Design and specifications are subject to change without notice.

Important Notice

- Fully charge the device before using for the first time.
- It is recommended that you use the 5 V AC adapter (more than 2 A) with this unit
- To enjoy more features, download the "LG XBOOM" App to your **Bluetooth** device.
- **Resetting**
  If have a malfunction with the speaker, press the **RESET** button.

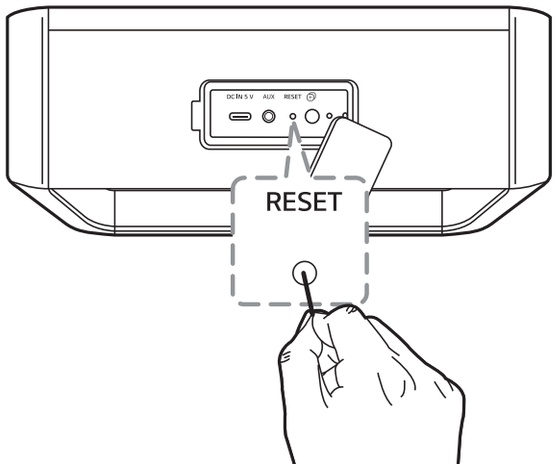

For more information, download the online owner's manual. http://www.lg.com

Safety Information

CAUTION: TO REDUCE THE RISK OF ELECTRIC SHOCK DO NOT REMOVE COVER (OR BACK) NO USER-SERVICEABLE PARTS INSIDE REFER SERVICING TO QUALIFIED SERVICE PERSONNEL.



This lightning flash with arrowhead symbol within an equilateral triangle is intended to alert the user to the presence of uninsulated dangerous voltage within the product's enclosure that may be of sufficient magnitude to constitute a risk of electric shock to persons.



The exclamation point within an equilateral triangle is intended to alert the user to the presence of important operating and maintenance (servicing) instructions in the literature accompanying the product.

WARNING:

- TO PREVENT FIRE OR ELECTRIC SHOCK HAZARD, DO NOT EXPOSE THIS PRODUCT TO RAIN OR MOISTURE.
- Do not install this equipment in a confined space such as a book case or similar unit.
- This unit contains magnets which can be harmful to some kind of object (Ex : Magnetic card, Pacemaker etc..).

CAUTION:

- Do not block any ventilation openings. Install in accordance with the manufacturer's instructions. Slots and openings in the cabinet are provided for ventilation and to ensure reliable operation of the product and to protect it from over heating. The openings should never be blocked by placing the product on a bed, sofa, rug or other similar surface. This product shall not be placed in a built-in installation such as a bookcase or rack unless proper ventilation is provided or the manufacturer's instruction has been adhered to.
- The apparatus should not be exposed to water (dripping or splashing) and no objects filled with liquids, such as vases, should be placed on the apparatus.
- No naked flame sources, such as lighted candles, should be placed on the apparatus.

- It is recommended that you use the 5 V AC adapter (more than 2 A) with this device. If you do not use the recommended adapter, charging is unavailable or charging time may differ.
- To avoid fire or electric shock, do not open the unit. Contact to qualified personnel only.
- Do not leave the unit in a place near the heating appliances or subject to direct sunlight, moisture, or mechanical shock.
- The Power Plug is the disconnecting device. In case of an emergency, the Power Plug must remain readily accessible.
- To clean the unit, use a soft, dry cloth. If the surfaces are extremely dirty, use a soft cloth lightly moistened with a mild detergent solution. Do not use strong solvents such as alcohol, benzine, or thinner, as these might damage the surface of the unit.
- Do not use volatile liquids such as insecticide spray near the unit. Wiping with strong pressure may damage the surface. Do not leave rubber or plastic products in contact with the unit for a long period of time.
- Do not place the unit over the vehicle's air bag. When the air bag deploys, it may result in injury. Before using in the car, fix the unit.
- Do not use the handsfree function during driving a car.
- Do not leave the unit on an unstable place such as high shelves. it may fall down because of the vibration of the sound.
- Do not use high voltage products around this product. (ex. Electrical swatter) This product may malfunction due to electrical shock.

CAUTION when using this product in environments of low humidity.

- It may cause static electricity in environments of low humidity.
- It is recommended to use this product after touching any metal object which conducts electricity.

NOTICE: For safety marking information including product identification and supply ratings, please refer to the main label on the bottom or the other surface of the product.

Symbols

	Refers to alternating current (AC).
	Refers to direct current (DC).
	Refers to class II equipment.
	Refers to stand-by.
	Refers to “ON” (power).
	Refers to dangerous voltage.

For models using a built-in battery

Do not store or transport at pressures lower than 11.6 kPa and at above 15,000 m altitude.

- replacement of a battery with an incorrect type that can defeat a safeguard (for example, in the case of some lithium battery types);
- disposal of a battery into fire or a hot oven, or mechanically crushing or cutting of a battery, that can result in an explosion;
- leaving a battery in an extremely high temperature surrounding environment that can result in an explosion or the leakage of flammable liquid or gas; and
- a battery subjected to extremely low air pressure that may result in an explosion or the leakage of flammable liquid or gas.

For models using a battery

This device is equipped with a portable battery or accumulator.

CAUTION: Risk of fire or explosion if the battery is replaced by an incorrect type.

How to Safely remove the batteries or the battery pack from the equipment : To Remove the old batteries or battery pack, follow the assembly steps in reverse order. To prevent contamination of the environment and bring on possible threat to human and/or animal health, the old batteries or the battery pack must be put in an appropriate container at designated collection points. Do not dispose of batteries or battery pack together with other waste. It is recommended that you use local, free reimbursement systems batteries or battery packs, (may not be available in your area). The batteries or the battery pack should not be exposed to excessive heat such as sunshine, fire or the like.