Printing Specification

1. Specification

Models	1. Model Name:	UR80
	2. Suffix:	TR
	3. Part No:	MFL71833958
	4. REV	REV00
	5. Number of pages	16
	6. Folded/Unfolded	3 Folded
SIZE	7. Trim size (W x H)_Unfolded (mm)	296 x 420 (+/-5)
	8. Trim size (W x H)_folded (mm)	148 x 105
	9. Bindery	-
COVER	10. Color (Cover)	-
	11. Paper (Cover)	-
	12. Weight (cover) (g/㎡)	-
INNER	13. Color (inner)	4 (CMYK)
	14. Paper (inner)	Wood free
	15. Weight (inner) (g/㎡)	70 (+/- 10)
	16. Coating	No
	17. Thomson	No
	18. Sub-material	No
	19. Languages	ENG (1)

1.1 Folding / Cover

Folded Step

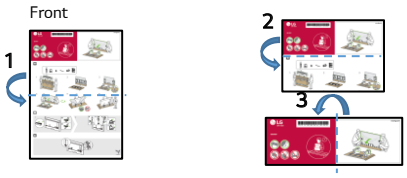

Folded

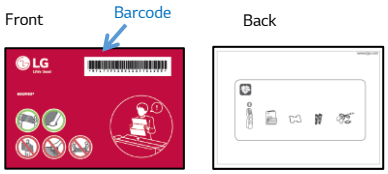

2. Origin Notification



Changes the Country name.

Printed in [Country Name in English]

Imprimé en(au) [Country Name in French]

[Country Name] (ENG/FRE)	
LGERS / LGEMX :	Printed in Mexico Imprimé au Mexique
LGEKR :	Printed in Korea Imprimé en Corée
LGEMA :	Printed in Poland Imprimé en Pologne
LGEND :	Printed in China Imprimé en Chine
LGEIN :	Printed in Indonesia Imprimé en Indonésie
Others :	Each Country name.

NOTE

[Restriction of Hazardous Substances]

Hazardous substances on this product should be satisfied by substance regulation of Level A-I, A-II, SVHC according to LG(52)B-5011 standard.
Especially, Part should be followed and controlled the following specification.

(1) Hazardous substances test report should be submitted when part certification test and first mass production.

(2) Especially, Don't use or contain lead (Pb) and cadmium (Cd) in ink.

INK REQUIREMENT FOR EU

(1) The amount of MOAH/MOSH must be less than 0.1% of the weight of the INK used.

*MOAH(Mineral Oil Aromatic Hydrocarbons) : Consisting of 1 to 7 aromatic cycles

*MOSH(Mineral Oil Saturated Hydrocarbons) : Consisting of 16 to 35 carbon atoms

(2) From 01 January 2025 : Ban on the use of MOAH in INK up to a limit of one part per million(1ppm) for compounds of 3 to 7 aromatic cycles

3. History

REV07					
REV06					
REV05					
REV04					
REV03					
REV02					
REV01					
REV00	2023-03-23			Checked	Nitin.H
				Approved	Santosh.C
Rev. Number	Date	Description	ECO Number	Owner	Aditya.K

LG
Life's Good

MFL71833958230 3REV00

Quick Start Guide

UR80*





www.lg.com

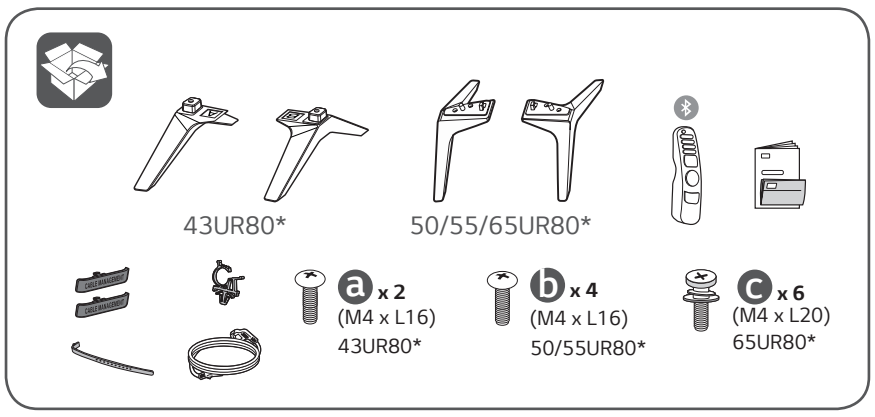

Images shown in manual may vary depending on model

Unpacking

Check your product box for the following items. If there are any missing accessories, contact the local dealer where you purchased your product. The illustrations in this manual may differ from the actual product and item.

43/50/55UR80*

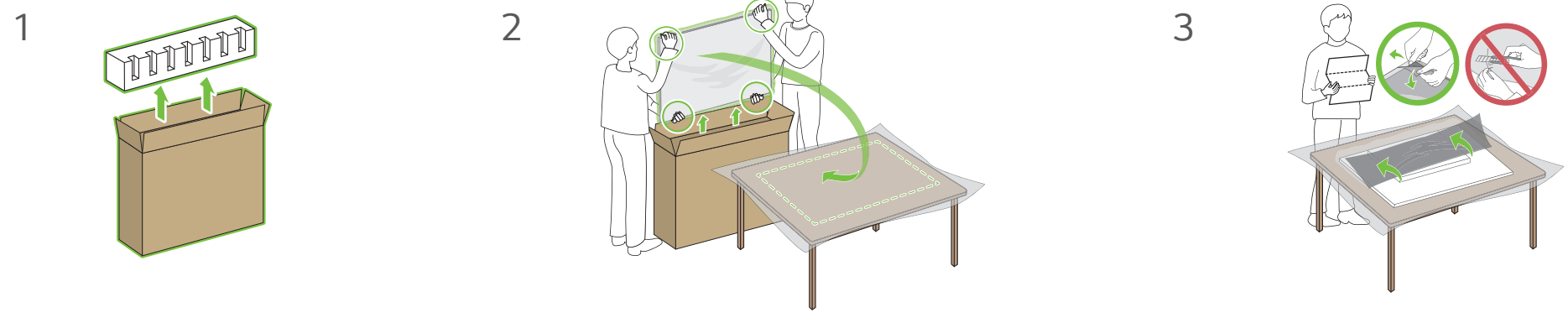

65UR80*

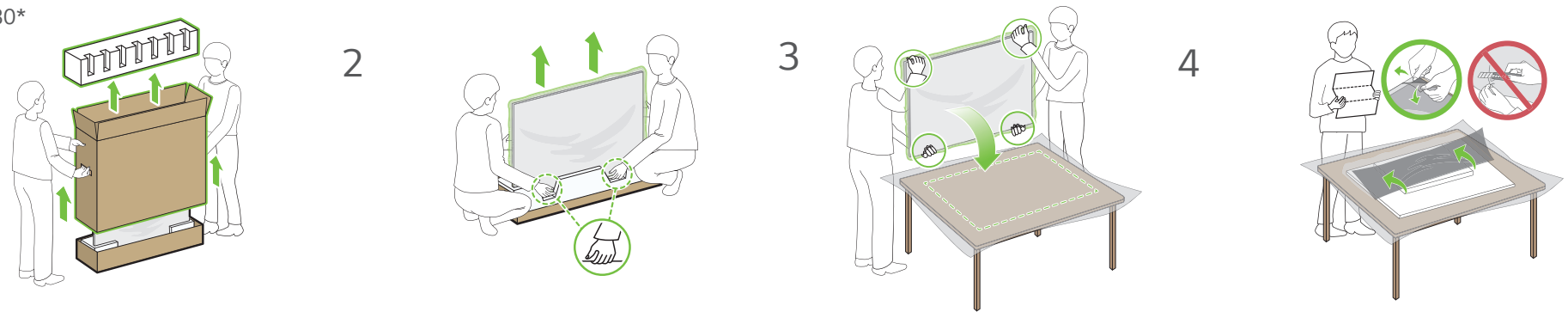

CAUTION
Image shown may differ from your TV
When attaching the stand to the TV set, place the screen facing down on a cushioned table or flat surface to protect the screen from scratches

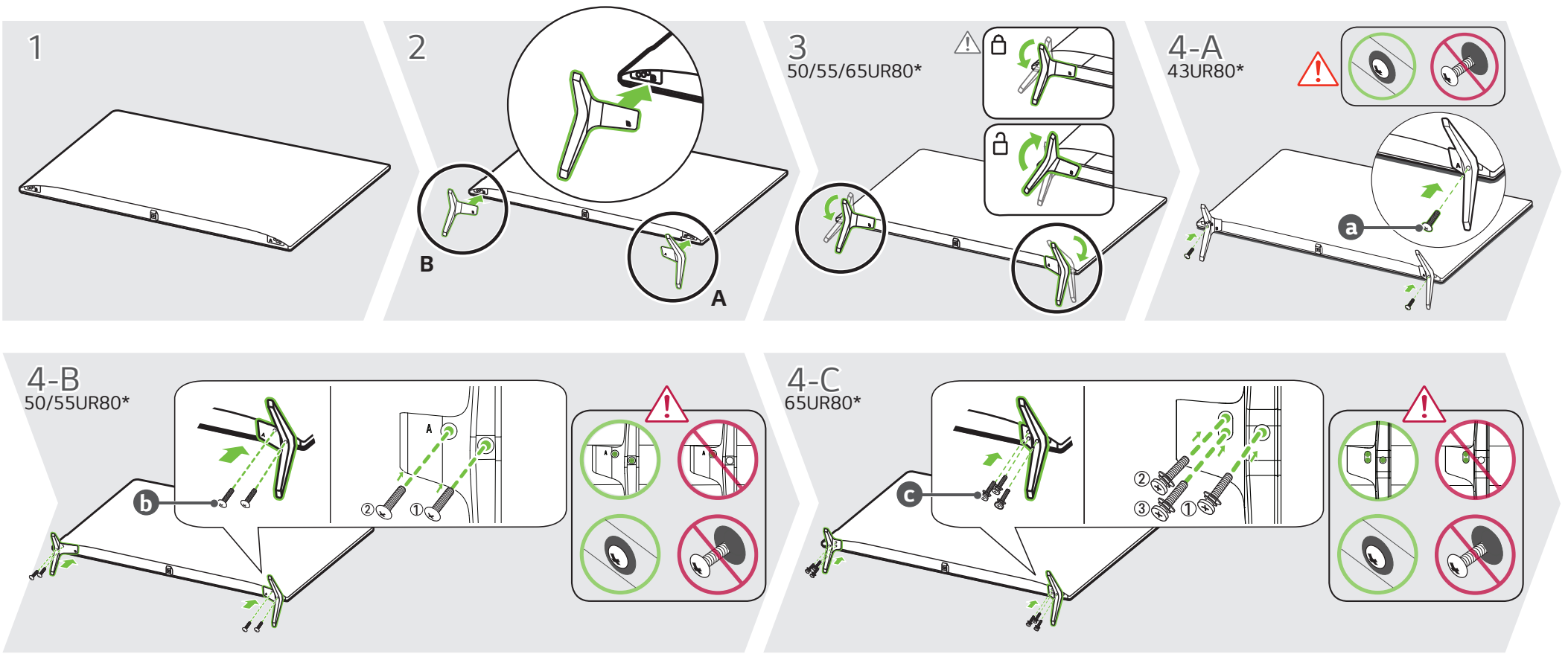

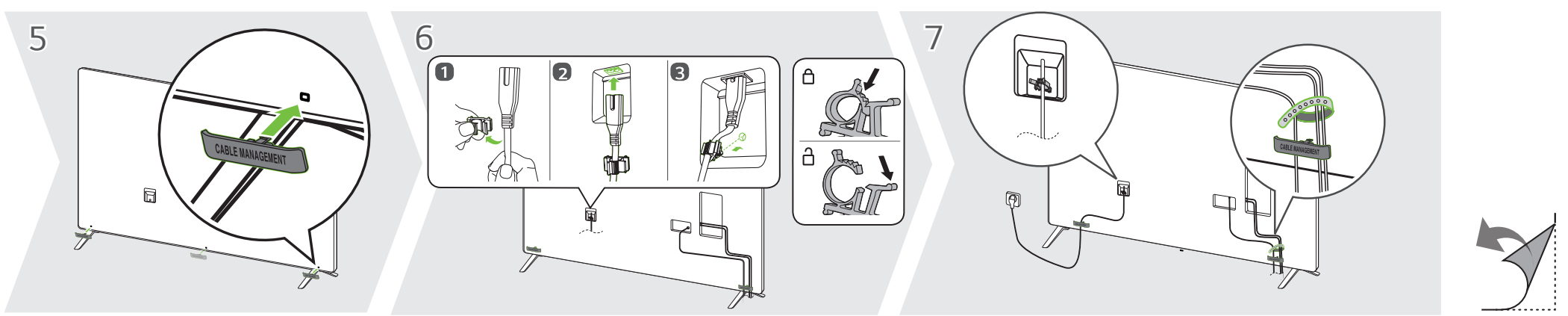

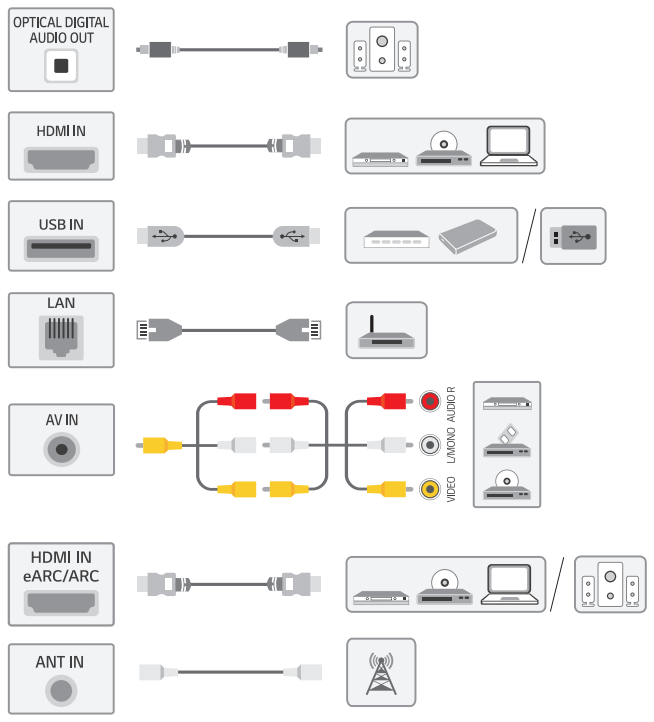

NOTE

- Do not look into the optical output ports, looking at the laser beam may damage your vision
- Audio with ACP (Audio Copy Protection)function may block digital audio output.

NOTE

- Some USB Hubs may not work, if a USB device connected using a USB Hub is not detected, connect it to the USB port on the TV directly
- Connect the external power source if your USB is needed.

ARC (Audio Return Channel)

An external audio device that supports SIMPLINK and ARC must be connected using HDMI IN eARC/ARC port When connected with a high-speed HDMI cable, the external audio device that supports ARC outputs SPDIF audio without additional audio cable and supports the SIMPLINK function



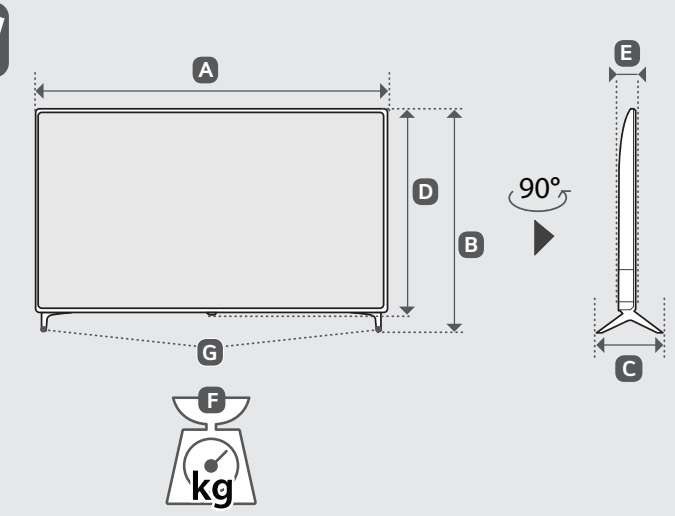

	A	B	C	D	E	F	F-G
	(mm)					(kg)	
43UR8000PSA 43UR8020PSB 43UR8040PSB 43UR8050PSB	967	621	216	564	57.1	8.9	8.8
50UR8000PSA 50UR8040PSB 50UR8050PSB	1121	713	231	651	57.1	11.9	11.7
55UR8000PSA 55UR8020PSB 55UR8040PSB 55UR8050PSB	1235	776	231	715	57.5	14.2	14.0
65UR8020PSB 65UR8040PSB 65UR8050PSB	1454	906	269	838	57.7	21.7	21.4

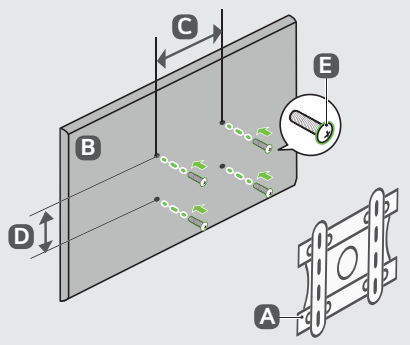

A	B	C x D (mm)	E
Wallmount Bracket	43/50UR80*	200 x 200	M6
	55UR80*	300 x 300	M6
	65UR80*	300 x 300	M6

