ENGLISH

SIMPLE MANUAL

Mini Hi-Fi Audio

Please read this manual carefully before operating your set and retain it for future reference.
To view the instructions of advanced features, visit http://www.lg.com and then download Owner's Manual. Some of the content in this manual may differ from your unit.

MODEL
OK75

MFL70403066

www.lg.com
Copyright © 2019 LG Electronics Inc. All Rights Reserved.
1807_Rev02



Top panel

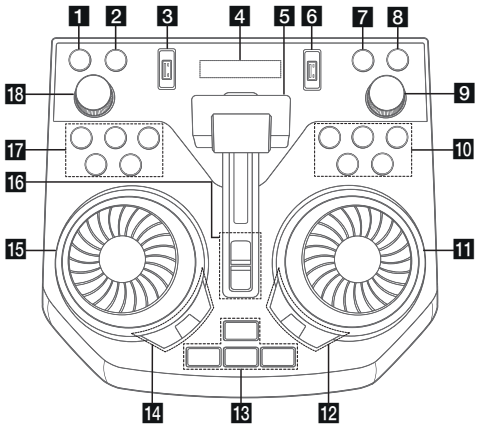

1 ⏻ (Standby)
Turns the power on or off.

2 USB REC / DEMO
- Records to USB.
- To stop Recording, press and hold for 3 seconds.
- In power off status, if you press **USB REC / DEMO**, show demo mode.

3 USB 1 Port
You can play sound files by connecting the USB device.

4 Display window

5 PARTY ACCELERATOR lever
Slide the lever to create a party atmosphere.

6 USB 2 Port
You can play sound files by connecting the USB device.

7 F (Function)
Selects the function and input source.

8 WIRELESS LINK
- Selects MAIN or OTHER on WIRELESS PARTY LINK mode.
- Enable or disable WIRELESS PARTY LINK mode.

9 MASTER VOL. (Volume) -/+
Adjusts speaker volume.

10 ⏮ (Skip/Search)
- Skips backward.
- Searches for a section within a track/file.
- Selects the radio stations.

⏯ (Play/Pause)
- Starts or pauses playback.
- Selects stereo/mono.

⏭ (Skip/Search)
- Skips forward.
- Searches for a section within a track/file.
- Selects the radio stations.

☐ (Stop)
Stops playback or cancels DELETE function.

⏏ (Open/Close)
Opens and closes the disc tray.

11 DJ SCRATCH / SEARCH & MULTI
- Turns clockwise or counterclockwise to make scratch sound.
- Searches a folder or a file

12 SPECIAL EQ / BASS BLAST (or **BASS BLAST+**)
- Chooses special equalizer.
- Press and hold to select BASS (or BASS+) effect directly.

SEARCH
Moves to folder or file in selection mode.

OK
Selects a folder when searching a file.

13 PARTY STARTER
- In power off state, this function turns on the unit with Party Kick Starter sound.
- In power on state, this function mixes the music with Party Kick Starter sound.

CLUB, DRUM, USER (DJ PAD)
Selects CLUB, DRUM or USER sound effect to mix.
(If you want to use USER, you have to register a source with "Music Flow Bluetooth" app.)

1, 2, 3 (DJ PAD)
Press a desired sound pad.

14 DJ EFFECT
Selects a desired DJ effect.

USER EQ
Selects the equalizer created by your own.

LIGHTING
Selects the lighting mode.

15 DJ SCRATCH / LEVEL CONTROL
- Turns clockwise or counterclockwise to make scratch sound.
- Turns clockwise or counterclockwise to control the USER EQ level.
- Adjust DJ EFFECT level.
- Selects the vocal effects.
- Selects the lighting effects.

16 PARTY ACCELERATOR MODE
Selects PARTY ACCELERATOR MODE.

DJ LOOP
Selects DJ LOOP mode.
(DJ LOOP mode can use during CD/USB playback.)

17 KEY CHANGER (♭ /#)
Changes the key to suit your vocal range.

VOICE CANCELLER
You can reduce the vocal tones during music playback from various input sources.

VOCAL EFFECTS
Selects VOCAL EFFECTS mode.

MIC ECHO
Selects ECHO mode.

18 MIC VOL. (Microphone Volume) **-/+**
Adjust microphone volume.

Front panel / Rear panel

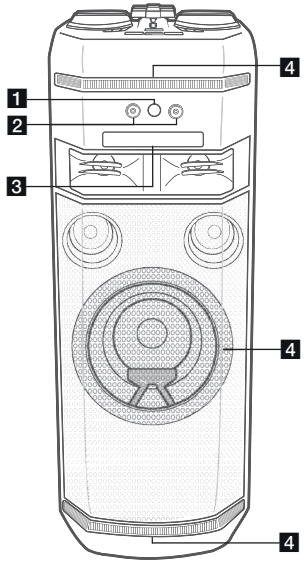

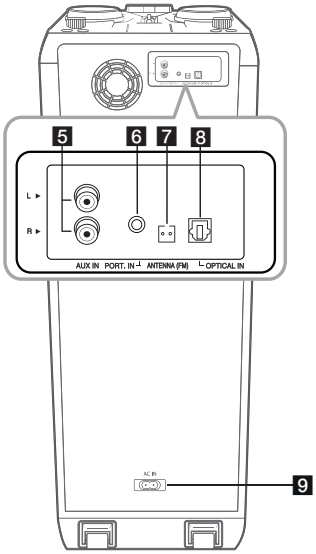

1 (Remote sensor)
2 **MIC**(Microphone) **1/2** jack
3 Disc tray
4 Lighting

5 **AUX IN** (L/R) : Connect an auxiliary device.
6 **PORT.**(Portable) **IN** : Connect a portable device.
7 **ANTENNA** (FM)
8 **OPTICAL IN** : Connect an optical device.
9 **AC IN** socket

Controller App

Download the **Music Flow Bluetooth** App to your device. (Android only)

LG Sound Sync



For more information, download the online owner's manual. **http://www.lg.com**

Additional Information

Specifications

Power Requirements	Refer to the main label on the unit.
Power Consumption	Refer to the main label on the unit.
Dimensions (W x H x D)	Approx. 330.0 mm x 925.0 mm x 360.0 mm
Bus Power Supply (USB)	5 V ⎓ 500 mA
Amplifier (Total RMS output power)	1,000 W RMS

Design and specifications are subject to change without notice.

Caution

- Connect the power cord to wall outlet directly if possible. Or when you use an extension cable, it is highly recommended to use an extension cable of 110 V / 15 A or 230 V / 15 A, otherwise the unit may not operate properly because of the lack of power supply.
- Do not overload the extension cord with excessive electrical load.

Note

- Do not look directly at the light emitting part when the LIGHTING is turned on.
- If the illumination brightness is glaring, switch on the room lights or turn off the LIGHTING of the unit.

Replacement of battery

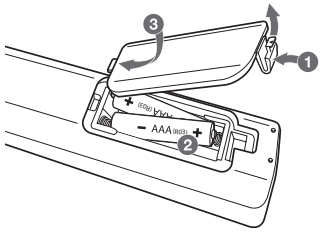

IMPORTANT SAFETY NOTICE

The cord grip for the plug fitted to this product is built into the existing power cord as supplied. If, for any reason you need to shorten the cord.

DO NOT RE-USE THE PLUG.

A new plug must be used to ensure your continued safety by securing the plug to the power cord in accordance with Plug & Socket Regulations 1994.



SAFETY PRECAUTION

THIS EQUIPMENT MUST BE DISCONNECTED FROM THE MAINS POWER SUPPLY WHEN IT IS NOT IN USE. DO NOT ALLOW THIS UNIT TO BE EXPOSED TO RAIN OR MOISTURE.

CAUTION

TO PREVENT ELECTRIC SHOCK, DO NOT REMOVE THE COVER. NO USER SERVICEABLE PARTS ARE INSIDE. REFER SERVICING TO QUALIFIED PERSONNEL.

The working life of this set is 7 years since the date of delivery to consumer. Upon the expiry of the said period, it might be unsuitable for the use according to their designation.

PRECAUTIONS

Please read these precautions before you operate this unit.

- Avoid extreme heat, cold, moisture and dust.
- Avoid using near a magnetic field. (This will adversely affect the units performance.)
- Be careful when the surface of the case is wiped with a volatile agent such as benzene, alcohol, thinner, etc. or a chemically processed cloth, the surface finish may deteriorate or its coating may peel.
- Use the unit only in a horizontal position, and do not place anything heavy on it.
- Keep the unit away from flower vases, tubs, sinks, etc. If any liquids should spill into unit, serious damage could occur. In that case, please consult qualified service personnel.
- Do not obstruct the ventilation holes: they prevent overheating. Even soft materials such as paper and cloth may prevent proper ventilation of the unit.
- **There are no serviceable parts inside. For service, please contact your service centre.**

JEDDAH MAIN SERVICE CENTER
P.O.BOX 704, JEDDAH 21421 KINGDOM OF SAUDI ARABIA
TEL) 02-629-2929

JEDDAH QUICK SERVICE CENTER
TEL) 02-663-3888 EXT. 340,343

RIYADH BRANCH SERVICE CENTER
TEL) 01-461-5559

AL KHOBAR BRANCH SERVICE CENTER
TEL) 03-857-2629/2637