OWNER'S MANUAL

LED LCD MONITOR

(LED Monitor*)

* LG LED Monitor applies LCD screen with LED backlights.
Please read this manual carefully before operating your set and retain it for future reference.

24BA850
27BA850

www.lg.com

Copyright © 2024 LG Electronics Inc. All Rights Reserved.

ENGLISH

TABLE OF CONTENTS

LICENSE 2

OPEN SOURCE SOFTWARE NOTICE INFORMATION 3

ASSEMBLING AND PREPARING 3

USING THE MONITOR..... 13

USER SETTINGS 16

TROUBLESHOOTING 26

PRODUCT SPECIFICATION..... 28

LICENSE

Each model has different licenses. Visit *www.lg.com* for more information on the license.

The terms HDMI, HDMI High-Definition Multimedia Interface, HDMI trade dress and the HDMI Logos are trademarks or registered trademarks of HDMI Licensing Administrator, Inc.

The SuperSpeed USB Trident logo is a registered trademark of USB Implementers Forum, Inc.

OPEN SOURCE SOFTWARE NOTICE INFORMATION

To obtain the source code that is contained in this product, under GPL, LGPL, MPL, and other open source licenses that have the obligation to disclose source code, and to access all referred license terms, copyright notices and other relevant documents, please visit *https://opensource.lge.com*.

LG Electronics will also provide open source code to you on CD-ROM for a charge covering the cost of performing such distribution (such as the cost of media, shipping, and handling) upon email request to *opensource@lge.com*.

This offer is valid to anyone in receipt of this information for a period of three years after our last shipment of this product.

ASSEMBLING AND PREPARING

CAUTION

- Always use genuine LG components to ensure safety and product performance.
- The product warranty will not cover damage or injury caused by the use of unauthorized components.
- It is recommended that use the supplied components.
- If you use generic cables not certified by LG, the screen may not display or there may be image noises.
- Illustrations in this document represent typical procedures, so they may look different from the actual product.
- Do not apply foreign substances (oils, lubricants, etc.) to the screw parts when assembling the product. (Doing so may damage the product.)
- Applying excessive force when tightening screws may cause damage to the monitor. Damage caused in this way will not be covered by the product warranty.
- Do not carry the monitor upside down by just holding the base. This may cause the monitor to fall off the stand and could result in personal injury.
- When lifting or moving the monitor, do not touch the monitor screen. The force applied to the monitor screen may cause damage to it.

NOTE

- The components may look different from those illustrated here.
- Without prior notice, all product information and specifications contained in this manual are subject to change to improve the performance of the product.
- To purchase optional accessories, visit an electronics store or an online shopping site, or contact the retailer from which you purchased the product.
- The power cord provided may differ depending upon the region.

Supported Drivers and Software

You can download and install the latest version from the LGE website (*www.lg.com*).

Drivers and Software	Installation Priority
Monitor Driver	Recommended
LG Switch	Recommended
Dual Controller	Optional

Product and Button Description

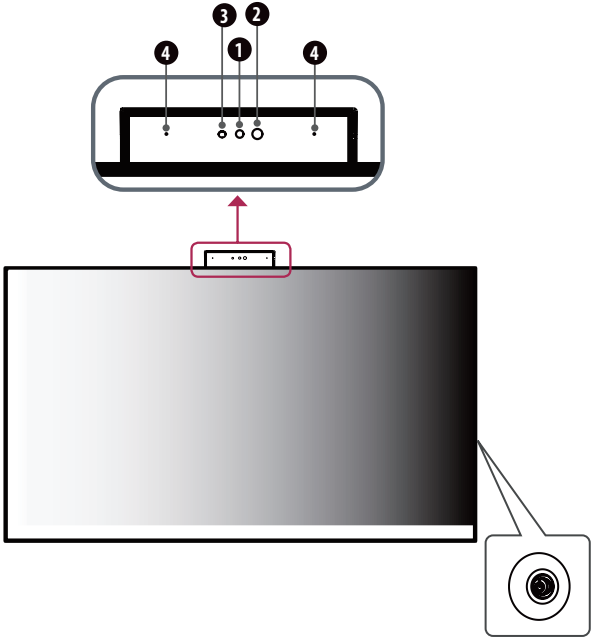

Joystick Button

Front Adjust Button Functions Information

1. Webcam
2. IR LED
3. Webcam activity status indicator
4. MIC

Webcam activity status indicator

Mode	LED Color
Webcam enabled	Blue
Webcam disabled	Off

NOTE

- The joystick button is located on the right back of the monitor.

How to Use the Joystick Button

You can easily control the functions of the monitor by pressing the joystick button or moving it left/right/up/down with your finger.

Basic Functions

	⏻	**Power on**	Press the joystick button once with your finger to turn on the monitor.
		Power off	Press and hold the joystick button once more than 3 seconds with your finger to turn off the monitor.
	◄/►	**Volume control**	You can control the volume by moving the joystick button left/right.

NOTE

- The direction of the button changes with the direction of the display.

Moving and Lifting the Monitor

When moving or lifting the monitor, follow these instructions to prevent the monitor from being scratched or damaged and to ensure safe transportation, regardless of its shape or size.

- Place the monitor in the original box or packing material before attempting to move it.
- Before moving or lifting the monitor, disconnect the power cord and all other cables.
- Hold the bottom and side of the monitor frame firmly. Do not hold the panel itself.
- When holding the monitor, the screen should face away from you to prevent it from being scratched.
- When transporting the monitor, do not expose the monitor to shock or excessive vibration.
- When moving the monitor, keep it upright and never turn the monitor on its side or tilt it sideways.

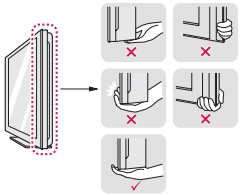

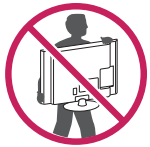

CAUTION

- Avoid touching the monitor screen as much as possible.
  - This may result in damage to the screen or some of the pixels used to create images.
- If you use the monitor panel without the stand base, its button may cause the monitor to become unstable and fall, resulting in damage to the monitor or human injury. In addition, this may cause the button to malfunction.

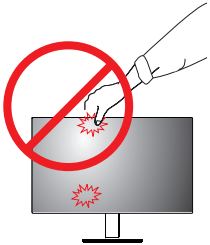

ENGLISH

Installing on a Table

- Lift the monitor and place it on the table in an upright position. Place the monitor at least 100 mm away from the wall to ensure sufficient ventilation.

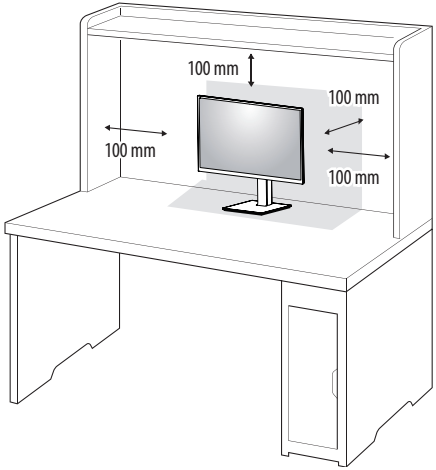

CAUTION

- Unplug the power cord before moving or installing the monitor. There is risk of electric shock.
- Make sure to use the power cord that is provided in the product package and connect it to a grounded power outlet.
- If you need another power cord, please contact your local dealer or the nearest retail store.

Adjusting the Stand Height

1. Place the monitor mounted on the stand base in an upright position.
2. Handle the monitor with both hands for safety.

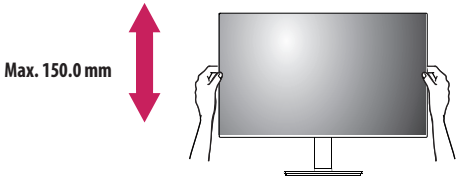

WARNING

- Do not put your fingers or hand between the screen and the base (chassis) when adjusting the screen's height.

Adjusting the Angle

1 Place the monitor mounted on the stand base in an upright position.

2 Adjust the angle of the screen.

The angle of the screen can be adjusted forward or backward from -5° to 21° for a comfortable viewing experience.

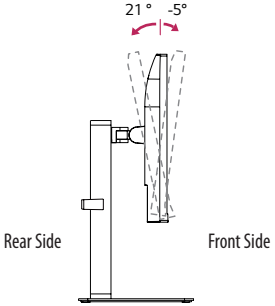

WARNING

- To avoid injury to the fingers when adjusting the screen, do not hold the lower part of the monitor's frame as illustrated below.
- Be careful not to touch or press the screen area when adjusting the angle of the monitor.

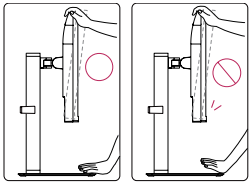

Pivot Feature

The pivot feature allows the monitor to rotate 90° clockwise and -90° counter clockwise.

1 Raise the monitor to the maximum height.

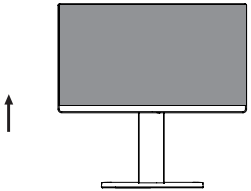

2 Adjust the angle of the monitor in the direction of the arrow as shown in the figure.

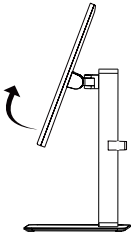

ENGLISH

3 Rotate the monitor 90° clockwise and -90° counter clockwise as shown in the figure.

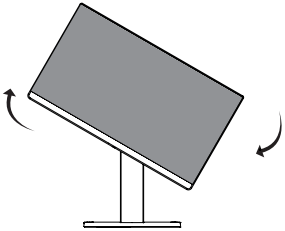

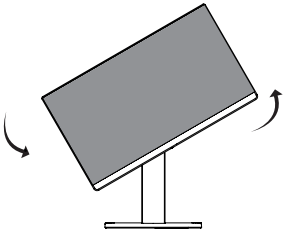

4 Complete the installation by rotating the monitor 90° clockwise and -90° counter clockwise as shown below.

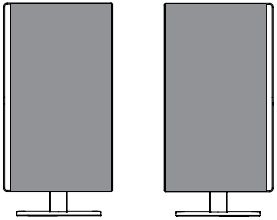

NOTE

- Auto Pivot feature of the display is not supported.
- The screen can be rotated easily using the screenpivot shortcut key provided with your Windows operating system. Note that some Windows versions and some graphics card drivers may use different settings for the screen pivot key or may not support the pivot key at all.
- Windows screen pivot shortcut keys
  - 0°: Ctrl + Alt + Up arrow key (↑)
  - 90°: Ctrl + Alt + Left arrow key (←)
  - 180°: Ctrl + Alt + Down arrow key (↓)
  - 270°: Ctrl + Alt + Right arrow key (→)

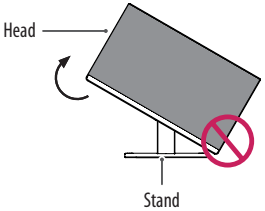

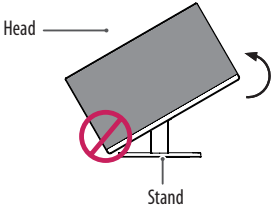

WARNING

- To avoid scratching the stand base, make sure that when rotating the monitor using the pivot feature, the stand does not make contact with the monitor.

WARNING

- Take care when rotating the monitor if the cable is connected.
- To avoid injury when rotating the display, do not place your fingers between the display and the stand base.

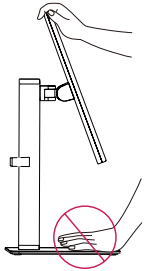

Swivel stand

- Image shown may differ from your Monitor set.

1 Swivel 90 degrees and adjust the angle of the Monitor set to suit your view.

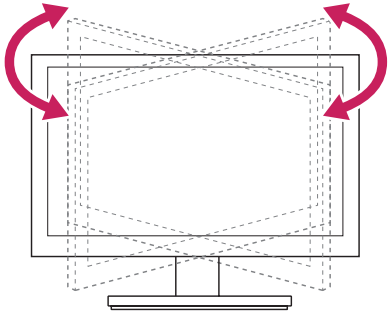

ENGLISH

Using the cable holder

Arrange the cables using the cable holder as shown in the illustration.

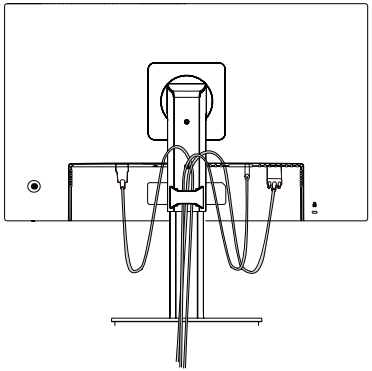

Rotate Set(Pivot) and put connectors. It is easy to put connectors and manage cables using cable holder.

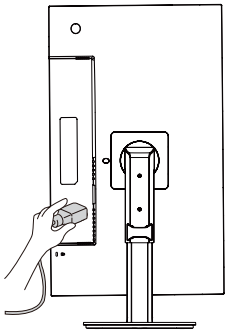

Using the Kensington Lock

The connector for the Kensington security system is located at the back of the monitor.

For more information on installation and usage, refer to the Kensington lock owner's manual or visit the website at *http://www.kensington.com*.

Connect the monitor to a table using the Kensington security system cable.

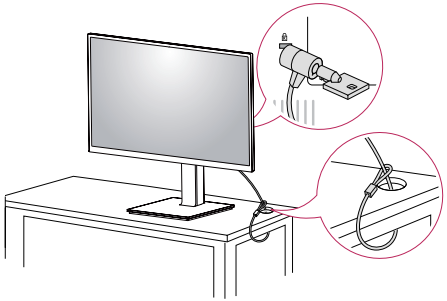

NOTE

- The Kensington security system is optional. You can obtain optional accessories from most electronics stores.

Installing the Wall Mount Plate

This monitor meets the specifications for the wall mount plate or other compatible devices.

NOTE

- The wall mount plate is sold separately.
- For more information on installation, refer to the wall mount plate's installation guide.
- Be careful not to apply too much force while mounting the wall mount plate as it may cause damage to the screen.
- Remove the stand before installing the monitor on a wall mount by performing the stand attachment in reverse.

Installing on the Wall

Install the monitor at least 100 mm away from the wall and leave about 100 mm of space at each side of the monitor to ensure sufficient ventilation. Detailed installation instructions can be obtained from your local retail store. Alternatively, please refer to the manual for how to install and set up a tilting wall mounting bracket.

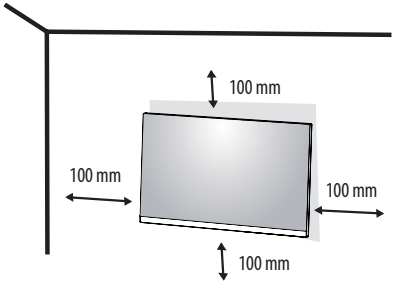

To install the monitor to a wall, attach a wall mounting bracket (optional) to the back of the monitor.
Make sure that the wall mounting bracket is securely fixed to the monitor and to the wall.

Wall Mount (mm)	100 x 100
Standard screw	M4 x L10
Number of screws	4
Wall Mount Plate (Optional)	LSW 149 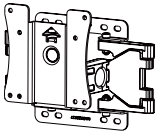

NOTE

- A non-VESA standard screw may damage the product and cause the monitor to fall. LG Electronics is not liable for any accidents relating to the use of non-standard screws.
- The wall mount kit includes the installation guide and all necessary parts.
- The wall mounting bracket is optional. You can obtain optional accessories from your local dealer.
- The length of the screw may differ for each wall mounting bracket. If you use screws longer than the standard length, it may damage the inside of the product.
- For more information, please refer to the user manual for the wall mounting bracket.

CAUTION

- Unplug the power cord before moving or installing the monitor to avoid electric shock.
- Installing the monitor on the ceiling or on a slanted wall may result in the monitor falling off, which could lead to injury. Use an authorized LG wall mount and contact the local dealer or qualified personnel.
- Applying excessive force when tightening screws may cause damage to the monitor. Damage caused in this way will not be covered by the product warranty.
- Use the wall mounting bracket and screws that conform to VESA standards. Damage caused by the use or misuse of inappropriate components will not be covered by the product warranty.
- When measured from the back of the monitor, the length of each installed screw must be 8 mm or less.

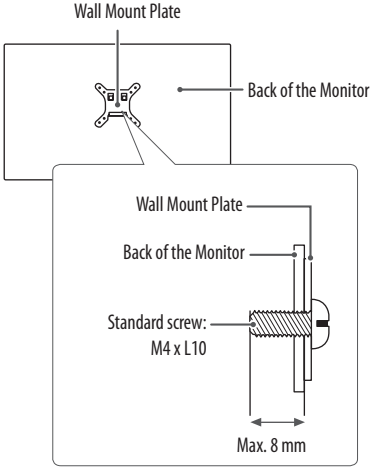

USING THE MONITOR

- Illustrations in this manual may differ from actual product.

Press the tact key button, go to **Settings** → **Input**, and then select the input option.

CAUTION

- Do not press the screen for a prolonged time. This may cause image distortion.
- Do not display a still image on the screen for a prolonged time. This may cause image retention. Use a PC screensaver if possible.
- When connecting the power cord to the outlet, use a grounded (3-hole) power strip or a grounded power outlet.
- The monitor may flicker when turned on in an area where the temperature is low. This is normal.
- Sometimes red, green, or blue spots may appear on the screen. This is normal.

Connecting to a PC

- This monitor supports the *Plug and Play feature.

* Plug and Play: A feature that allows you to add a device to your computer without having to reconfigure anything or install any manual drivers.

HDMI Connection

Transmits digital video and audio signals from your PC to the monitor.

CAUTION

- Using a DVI to HDMI / DP (DisplayPort) to HDMI cable may cause compatibility issues.
- Use a certified cable with the HDMI logo attached. If you do not use a certified HDMI cable, the screen may not display or a connection error may occur.
- Recommended HDMI cable types
  - High-Speed HDMI®/™ cable
  - High-Speed HDMI®/™ cable with Ethernet

DisplayPort Connection

Transmits digital video and audio signals from your PC to the monitor.

NOTE

- There may be no video or audio output depending on the DP (DisplayPort) version of the PC.
- If you are using a Mini DisplayPort output graphics card, use a Mini DP to DP (Mini DisplayPort to DisplayPort) cable or gender that supports DisplayPort 1.4. (Sold separately)

USB-C connection

Transmits digital video and audio signals and USB data from your PC to the monitor. Press the menu button and then select the input option from the input menu.

NOTE

- PD(Power Delivery) and DP Alternate Mode (DP over USB-C) are supported via USB-C Port.
- Features may not work properly depending on the connected device's specifications and the environment.
- USB-C port is not for the Monitor Power source but for a PC power source.

  Connect Adapter to supply power to the Monitor

Connecting LAN

LAN connection

Connect the router or switch to the monitor.

NOTE

- The LAN cable is sold separately.
- The following LAN cable type can be used: Standard: IEEE 802.3 ETHERNET
- Connect the LAN cable and the peripheral devices to use the monitor.
  - In order to use Ethernet in the PC, the USB-C cable must be connected to the PC.
- The monitor and PC must be connected with a USB-C cable or USB-B cable to use wired LAN.

Connecting AV Devices

HDMI Connection

HDMI transmits digital video and audio signals from your AV device to the monitor.

NOTE

- Using a DVI to HDMI / DP (DisplayPort) to HDMI cable may cause compatibility issues.
- Use a certified cable with the HDMI logo attached. If you do not use a certified HDMI cable, the screen may not display or a connection error may occur.
- Recommended HDMI cable types
  - High-Speed HDMI®/™ cable
  - High-Speed HDMI®/™ cable with Ethernet

USB Device connection

The USB port on the product functions as a USB hub.

NOTE

- It is recommended you install all Windows Updates to keep your Windows up-to-date before connecting to the product for use.
- Peripheral devices are sold separately.
- A keyboard, mouse, or USB device can be connected to the USB port.
- The charging speed may vary depending on the device.
- To use the monitor's downstream USB port, connection to the host PC must be established by using a USB C-C or USB C-A cable for the USB-C port, or a USB B-A cable for the USB-B port.
- When the USB C-C cable is connected between Upstream port of monitor and Host PC, the Downstream port of monitor support USB 2.0 device.
- When the USB C-A cable is connected between Upstream port of monitor and Host PC, the Downstream port of monitor support USB 3.0 device.
  However, Host PC & USB C-A cable must support USB 3.0 function.

CAUTION

Cautions When Using a USB Device

- A USB device with an automatic recognition program installed, or that uses its own driver, may not be recognized.
- Some USB devices may not be supported or may not work properly.
- It is recommended to use a USB hub or hard disk drive with power supplied. (If the power supply is not adequate, the USB device may not be recognized properly.)

Connecting Peripherals

Headphones Connection

Connect peripherals to the monitor via the headphones port.

NOTE

- Peripheral devices are sold separately.
- Depending on the audio settings of the PC and external device, headphones and speaker functions may be limited.
- If you use angled earphones, it may cause a problem with connecting another external device to the monitor. Therefore, it is recommended to use straight earphones.

Angled

Straight
(Recommend)

- Headphone Port (4-pole ear microphone port)
  - The 4-pole ear microphone port supports US 4-pole standards, but not the European 4-pole ear microphone.
  - When using ear microphone (or Bluetooth® headset), audio input and output are directed to the connected device and the microphone and speaker on PC do not work.
  - The 4-pole ear microphone port does not support external microphone.
  - The monitor and PC must be connected with a USB-C cable or USB-B cable to use the headphone's microphone.
  - The volume buttons included in the 4-pole headphones do not work.

WebCAM Connection

You can use the WebCAM by connecting the USB-C cable or USB-B cable to a PC.

NOTE

- You need to pull up by the WebCAM module at the top of the back of the product to use WebCAM.
- The webcam microphone is the default device and when a 4-pole headset is plugged in, it is converted into 4-pole headphone.

USER SETTINGS

NOTE

- Your monitor's OSD (On Screen Display) may differ slightly from that shown in this manual.

Activating the Main Menu

Joystick Button

1. Press the joystick button on the right back of the monitor.
2. Move the joystick up/down and left/right to set the options.
3. Press the joystick button once more to exit the main menu.

Button	Menu Status		Description
	Main menu disabled		Enables the main menu.
	Main menu enabled		Exits the main menu. (Holding down the button more than 3 seconds to turn off the monitor. You can turn off the monitor this way at any time, including when the OSD is on.)
	◄	**Main menu disabled**	Adjusts the monitor volume level.
		Main menu enabled	Enters the **Input** features.
	►	**Main menu disabled**	Adjusts the monitor volume level.
		Main menu enabled	Enters the **Settings** feature.
	▲	**Main menu disabled**	Adjusts the monitor brightness level.
		Main menu enabled	Turns off the monitor.
	▼	**Main menu disabled**	Adjusts the monitor brightness level.
		Main menu enabled	Enters the **Picture Mode** feature.

Main Menu Features

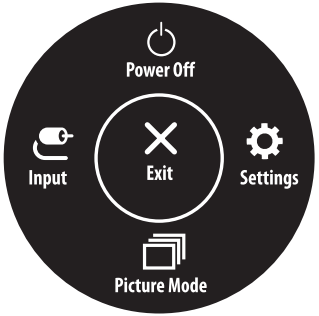

Main Menu	Description
Input	Sets input mode.
Power Off	Turns off the monitor.
Settings	Configures the screen settings.
Picture Mode	Sets the picture mode.
Exit	Exits the main menu.

Menu Settings

1 To view the OSD menu, press the joystick button on the right back of the monitor and then enter the **Settings**.
2 Move the joystick up/down and left/right to set the options.
3 To return to the upper menu or set other menu items, move the joystick to ◀ or pressing (⏻) it.
4 If you want to exit the OSD menu, move the joystick to ◀ until you exit.

Quick Settings

Input

Picture

General

NOTE

- : On
- : Off

ENGLISH

Quick Settings

Settings > Quick Settings	Description	
Brightness	Adjusts the contrast and brightness of the screen.	
Contrast		
Volume	Adjusts the volume.	
	NOTE • You can adjust **Mute** / **Unmute** by pressing the ▼ button in the Volume menu.	
Color Temp	**Custom**	The user can adjust it to red, green, or blue by customization.
	Warm	Sets the screen color to a reddish tone.
	Medium	Sets the screen color between a red and blue tone.
	Cool	Sets the screen color to a bluish tone.
	Manual	The user can fine-tune the color temperature.

Input

Settings > Input	Description	
Input List	Selects the input mode.	
Auto Input Switch	When automatic input switch is set to **On**, display will automatically switch to new input when connected.	
	On	Enables **Auto Input Switch**.
	Off	Disables **Auto Input Switch**.
Aspect Ratio	Adjusts the aspect ratio of the screen.	
	Full Wide	Displays the video in widescreen, regardless of the video signal input.
	4:3	Displays the video in 4:3.
	NOTE • The display may look the same for **Full Wide** and **4:3** options at the recommended resolution. (1920 x 1080)	

ENGLISH

Picture

Settings > Picture	Description	
Picture Mode	**Custom**	Allows the user to adjust each element.
	Vivid	Heightens contrast, brightness and sharpness to display vivid images.
	Reader	Optimizes the screen for viewing documents. You can brighten the screen in the OSD menu.
	Cinema	Optimizes the screen to improve the visual effects of a video.
	FPS	This mode is optimized for FPS games.
	RTS	This mode is optimized for RTS Game.
	Color Weakness	This mode is for users who cannot distinguish between red and green. It enables users with color weakness to easily distinguish between the two colors.
	NOTE • The **Picture Mode** that can be set depends on the Input signal. • If the **Picture Mode** is changed in the DP (DisplayPort) input, the screen may flicker or the resolution of your PC screen may be affected.	

Settings > Picture	Description		
Picture Adjust	Brightness	Adjusts the contrast and brightness of the screen.	
	Contrast		
	Sharpness	Adjusts the sharpness of the screen.	
	SUPER RESOLUTION+	High	Optimizes the screen for crystal clear images. Best for high-definition video or games.
		Middle	Optimizes the screen for comfortable viewing, with images at the middle level between the low and high modes. Best for UCC or SD videos.
		Low	Optimizes the screen for smooth and natural images. Best for still images or images with less movement.
		Off	Displays in the most common setting. Disables **SUPER RESOLUTION+**.
		NOTE • Because this is a function to increase the sharpness of low resolution pictures, it is not recommended to use the function for normal text or for desktop icons. Doing so may result in unnecessarily high sharpness.	
	Black Level	Sets the offset level (for HDMI only). • Offset: as a reference for a video signal, this is the darkest color the monitor can display.	
		High	Keeps the current contrast ratio of the screen.
		Low	Lowers the black levels and raises the white levels from the current contrast ratio of the screen.
	DFC	On	Adjusts the brightness automatically according to the screen.
		Off	Disables the **DFC** feature.

Settings > Picture	Description		
Game Adjust	**Response Time**	Sets a response time for displayed pictures based on the movement of the picture on the screen. For a normal environment, it is recommended that you use **Fast**. When there is a lot of motion, it is recommended that you use **Faster**. Setting to **Faster** may cause image sticking.	
		Faster	Sets the response time to Faster.
		Fast	Sets the response time to Fast.
		Normal	Sets the response time to Normal.
		Off	Does not use the response time improvement feature.
	Black Stabilizer	You can control the black contrast to have better visibility in dark scenes. Increasing the **Black Stabilizer** value brightens the low gray level area on the screen. (You can easily distinguish objects on dark game screens.) Reducing the **Black Stabilizer** value darkens the low gray level area and increases the dynamic contrast on the screen.	

Settings > Picture	Description		
Color Adjust	**Gamma**	**Mode 1, Mode 2, Mode 3**	The higher the gamma value, the darker the image becomes. Likewise, the lower the gamma value, the lighter the image becomes.
		Mode 4	If you do not need to adjust the gamma settings, select **Mode 4**.
		DICOM Gamma Curve	This product has been approved as an IT device and not as a medical device. It is intended for office use only. (It may be used for education and reference purpose but not for medical diagnosis.) **NOTE** • Function may vary by model.
	Color Temp	Set your own color temperature.	
		Custom	The user can adjust it to red, green, or blue by customization.
		Warm	Sets the screen color to a reddish tone.
		Medium	Sets the screen color to between a red and blue tone.
		Cool	Sets the screen color to a bluish tone.
		Manual	The user can fine-tune the color temperature.
	Red/Green/Blue	You can customize the picture color using red, green, and blue colors.	
	Six Color	Meets the user requirements for colors by adjusting the hue and saturation of the six colors and then saving the settings.	
		Hue	Adjusts the tone of the screen colors.
		Saturation	Adjusts the saturation of the screen colors. The lower the value, the less saturated . The higher the value, the more saturated .
Picture Reset	**Do you want to reset your picture settings?**	**No**	Cancel the select.
		Yes	Returns to the default settings.

ENGLISH

General

Settings > General	Description	
Language	Sets the menu screen to the desired language.	
USB Selection	Select the USB upstream cable connection port to use USB hub of the monitor.	
SMART ENERGY SAVING	Conserve energy by using luminance compensation algorithm.	
	High	Saves energy using the high-efficiency **SMART ENERGY SAVING** feature.
	Low	Saves energy using the low-efficiency **SMART ENERGY SAVING** feature.
	Off	Disables the feature.
	NOTE • The value of energy saving data may differ depending on panel and panel suppliers. • If you select the option of **SMART ENERGY SAVING** is **High** or **Low**, monitor luminance become lower or higher depend on source.	
Deep Sleep Mode	When Deep sleep mode is enabled, power consumption is minimized while the monitor is in standby mode.	
	On	Enables **Deep sleep Mode**.
	Off	Disables **Deep sleep Mode**.
Automatic Standby	If there is no operation on the monitor for a certain period of time, the monitor will automatically switch to standby mode. (**8 H**, **6 H**, **4 H** and **Off**)	
Input Compatibility Version	Set Input Compatibility Version to the same version as the connected external device. - If the connected device does not support HDMI 2.0, the screen or sound may not work properly. - Some older graphics cards do not support HDMI 2.0,but you can select HDMI 2.0 resolution in the control panel of window.	

Settings > General	Description	
DP OUT	Set DP OUT for Multi Stream Transport.	
	On	Enables DP OUT(MST) function
	Off	Disables DP OUT(MST) function.
	NOTE • Make sure that the graphics card supports the MST function. • Mac OS does not support DP OUT.	
Buzzer	This feature lets you set the sound generated from Buzzer when your monitor powers on.	
	On	Enables your monitor's **Buzzer**.
	Off	Disables your monitor's **Buzzer**.
OSD Lock	This feature disables the configuration and adjustment of menus.	
	On	Enables **OSD Lock**.
	Off	Disables **OSD Lock**.
	NOTE • All features are disabled except Brightness, Contrast, Volume, Input List, Auto Input Switch, Aspect Ratio, OSD Lock, Information and Open Source Software License.	
Information	The following display information will be shown; **Total Power On Time**, **Resolution**.	
Open Source Software License	You can check the Open Source Software notice information.	
Reset to Initial Settings	Do you want to reset your settings?	
	No	Cancel the reset.
	Yes	Returns to the default settings.

TROUBLESHOOTING

ENGLISH

Nothing is displayed on the screen.	
Is the monitor's power cord plugged in?	• Check if the power cord is correctly plugged into the power outlet.
Is the **No Signal** message being displayed?	• This is displayed when the signal cable between the PC and the monitor is missing or disconnected. Check the cable and reconnect it. • If **Settings** -> **General** -> **DP OUT** is On, execute **Settings** -> **General** -> **Reset to Initial Settings**. It may be a PC that does not support DP OUT (MST).
Is the **Out of Range** message being displayed?	• This occurs when signals transferred from the PC (graphics card) are out of the horizontal or vertical frequency range of the monitor. Please see the Product Specification section of this manual to set the appropriate frequency.
Screen display is unstable and shaky. / Images displayed on the monitor leave shadow trails.	
Did you select the appropriate resolution?	• If the selected resolution is HDMI 1080i 60/50 Hz (interlaced), the screen may be flickering. Change the resolution to 1080p or the recommended resolution. • Not setting the graphics card to the recommended (optimal) resolution may result in blurred text, a dimmed screen, a truncated display area or misalignment of the display. • The setting methods may be different depending on the computer or operating system, and some resolutions may not be available depending on the performance of the graphics card. If this is the case, contact the manufacturer of the computer or graphics card for assistance.
Does image sticking occur even when the monitor is turned off?	• Displaying a still image for a prolonged time may cause damage to the screen, resulting in the retention of the image. • To extend the lifetime of the monitor, use a screensaver.
Are there spots on the screen?	• When using the monitor, pixilated spots (red, green, blue, white, or black) may appear on the screen. This is normal for an LCD screen. It is not an error, nor is it related to the monitor's performance.
Some features are disabled.	
Are some functions not available when you press the Menu button?	• The OSD is locked. Disable **OSD Lock** in **General**.

Do you see an "Unrecognized monitor, Plug and Play (VESA DDC) monitor found" message?	
Have you installed the display driver?	• Be sure to install the display driver from our web site: *http://www.lg.com*. • Make sure to check if the graphics card supports Plug and Play function.
No sound from the headphone port.	
Are images displayed without sound?	• Make sure that the headphone port connections are made properly. • Try increasing the volume with the ► button. • Set the audio output of the PC to the monitor you are using. (The settings may differ depending on the operating system (OS) you use.)

PRODUCT SPECIFICATION

ENGLISH

24BA850

LCD Screen	Color Depth	8-bit color is supported.	
Resolution	Max Resolution	1920 x 1080 @ 100 Hz	
	Recommended Resolution	1920 x 1080 @ 60 Hz	
Power Sources	Power Rating	100-240 V ~50/60 Hz 2.5A	
Environmental Conditions	Operating Conditions	Temperature	0 °C to 40 °C
		Humidity	Less than 80 %
	Storing Conditions	Temperature	-20 °C to 60 °C
		Humidity	Less than 85 %
Dimensions	Monitor Size (Width x Height x Depth)		
	With Stand	539.6 x 517.5 x 250 (mm)	
	Without Stand	539.6 x 323 x 50 (mm)	
Weight (Without Packaging)	With Stand	6.5 kg	
	Without Stand	3.9 kg	

The specifications are subject to change without notice.

The symbol ~ means alternating current, and the symbol ⎓ means direct current.

PRODUCT SPECIFICATION

27BA850

LCD Screen	Color Depth	8-bit color is supported.	
Resolution	Max Resolution	1920 x 1080 @ 100 Hz	
	Recommended Resolution	1920 x 1080 @ 60 Hz	
Power Sources	Power Rating	100-240 V ~50/60 Hz 2.5A	
Environmental Conditions	Operating Conditions	Temperature	0 °C to 40 °C
		Humidity	Less than 80 %
	Storing Conditions	Temperature	-20 °C to 60 °C
		Humidity	Less than 85 %
Dimensions	Monitor Size (Width x Height x Depth)		
	With Stand	611.7 x 538 x 250 (mm)	
	Without Stand	611.7 x 364.1 x 50.3 (mm)	
Weight (Without Packaging)	With Stand	7.9 kg	
	Without Stand	5.3 kg	

The specifications are subject to change without notice.

The symbol ~ means alternating current, and the symbol ⎓ means direct current.

Factory Support Mode (Preset Mode, PC)

HDMI

Resolution	Horizontal Frequency (kHz)	Vertical Frequency (Hz)	Polarity (H/V)	Remarks
640 x 480	31.469	59.940	-/-	
800 x 600	37.879	60.317	+/+	
1024 x 768	48.363	60.004	-/-	
1920 x 1080	67.500	60.000	+/+	
1280 x 720	44.444	59.979	+/-	
1920 x 1080	66.587	59.934	+/-	Recommended Timing - Input Compatibility Version : 1.4 - Input Compatibility Version : 2.0
1920 x 1080	113.221	99.930	+/-	

DP / USB-C

Resolution	Horizontal Frequency (kHz)	Vertical Frequency (Hz)	Polarity (H/V)	Remarks
640 x 480	31.469	59.940	-/-	
800 x 600	37.879	60.317	+/+	
1024 x 768	48.363	60.004	-/-	
1920 x 1080	67.500	60.000	+/+	
1280 x 720	44.444	59.979	+/-	
1920 x 1080	66.587	59.934	+/-	Recommended Timing - Input Compatibility Version : 1.2 - Input Compatibility Version : 1.4
1920 x 1080	113.221	99.930	+/-	

HDMI Timing (Video)

Factory support mode (Preset Mode)	Horizontal Frequency(kHz)	Vertical Frequency(Hz)	Remarks
480p	31.5	60	
720p	45.0	60	
1080p	67.5	60	
2160p	135	60	

The model and serial number of the product are located on the back and on one side of the product.
Record them below in case you ever need service.

Model _____

Serial No. _____

This Product qualifies for ENERGY STAR®

Changing the factory default configuration and settings or enabling certain optional features and functionalities may increase energy consumption beyond the limits required for ENERGY STAR® certification.

Refer to ENERGYSTAR.gov for more information on the ENERGY STAR® program.