LG
Life's Good

ENGLISH

SIMPLE MANUAL

DVD Wireless Home Theater System

To view the instructions of advanced features,
visit http://www.lg.com and then download Owner's Manual.
Some of the content in this manual may differ from your unit.

MODEL
LHD756W

MFL69462905

www.lg.com

LHD756W-FC.DEGYLLK_SIM_ENG_2905.indd 1 2016-03-24 3:40:49



Front Panel

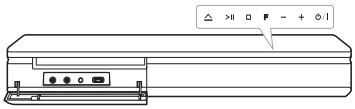

MIC 1/2 ····· Connect a microphone.
PORT. IN ····· Connect to a Portable device.
USB Port ····· Connect a USB device.
⏏ ····· Disc Tray Open / Close
>II ····· Starts / Pauses playback.
□ ····· Stops playback.
F ····· Changes the input source or function.
- / + ····· Adjusts volume.
⏻ **/ I** ····· Power On / Off

Rear Panel

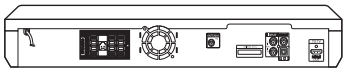

SPEAKERS ····· Connect to speakers.
ANTENNA FM ····· Connect to radio antenna.
WIRELESS ····· Connect a Wireless TX.
AUX (L/R) INPUT ····· Connect to analogue device.
VIDEO OUT ····· Connect to TV.
HDMI OUT TO TV ····· Connect to TV.
OPTICAL IN ····· Connect to digital device.

1 Speaker Assembling

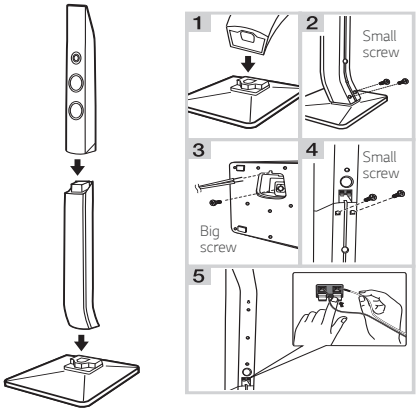

2 Speaker Connection

! Speaker design and connection method may be different according to models.

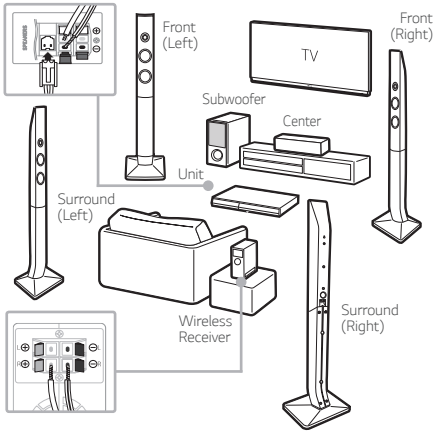

About Ferrite Core (Optional)

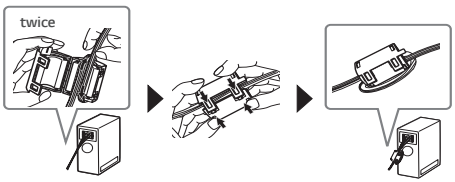

3 Pair Up with Wireless Receiver

1. Connect the rear speakers to the wireless receiver.
2. Connect the power cord of wireless receiver to the outlet.
3. Turn off the unit and insert the Wireless TX into the WIRELESS connector on the rear of the unit.
4. Turn on the player :
   The player and wireless receiver will be **automatically** connected.

If no sound is heard from the rear speakers connected to wireless receiver, please follow as below.

1. Press and hold ☐ STOP button on the unit and MUTE button on the remote control simultaneously.
   - Displays the "REMATE".
2. Press PAIRING on back of the wireless receiver.
   - The Yellow LED will flicker
3. Turn off and on the unit.
   - If you see Yellow LED, it' s successful.
4. If you don't see Yellow LED, try again Step 1 - Step 3.

4 TV Connection

HDMI & Optical Connection

1. Connect the Player to the TV using HDMI & Optical cable.
2. Set the input selector to HDMI on the TV.
3. Set up [External Speaker (Optical)] on your TV setting menu.
4. Follow the instructions on the TV screen using remote control.

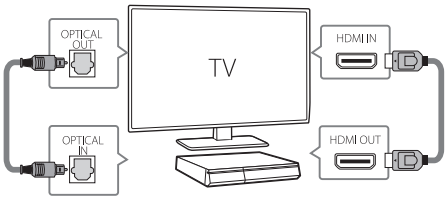

5 Home Menu

Home menu appears on the TV screen. Enjoy various functions on the player.



For more information, download the online owner's manual. http://www.lg.com

Additional Information

Specification

Power requirements	Refer to main label.
Power consumption	Refer to main label.
Dimensions (W x H x D)	Approx. 440 mm x 65 mm x 298 mm
Net Weight	Approx. 3.2 kg
Bus Power Supply (USB)	5 V ⎓ 500 mA
Amplifier (Total RMS output power)	1,200 W

Design and specifications are subject to change without notice.

Replacement of battery

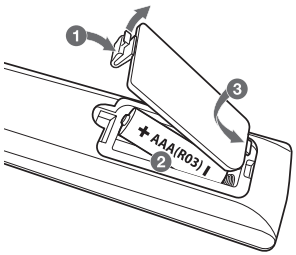

HDMI™
HIGH-DEFINITION MULTIMEDIA INTERFACE