LG
Life's Good

ENGLISH

SIMPLE MANUAL

Portable Bluetooth Speaker

MODELS
PK5 / PK5W

FOR THE GUARANTEE TERMS & CONDITIONS, PLEASE REFER TO LAST SECTION ON THE OTHER SIDE OF THE BACK COVER.

MFL70480449
1904_Rev01

www.lg.com

Copyright © 2019 LG Electronics Inc.
All Rights Reserved.

Sound Effect LEDs (○: On / ●: Off)

Clear Vocal + Enhanced Bass	Clear Vocal	Enhanced Bass	Standard
○ ○	○ ●	● ○	● ●

Charging LED status

Green → **Off** : Fully Charged

Red : Charging

Battery LED status

Green : ≥ 70 % / **Amber** : > 10 %

(!) Blinking red indicates the battery needs to be charged.

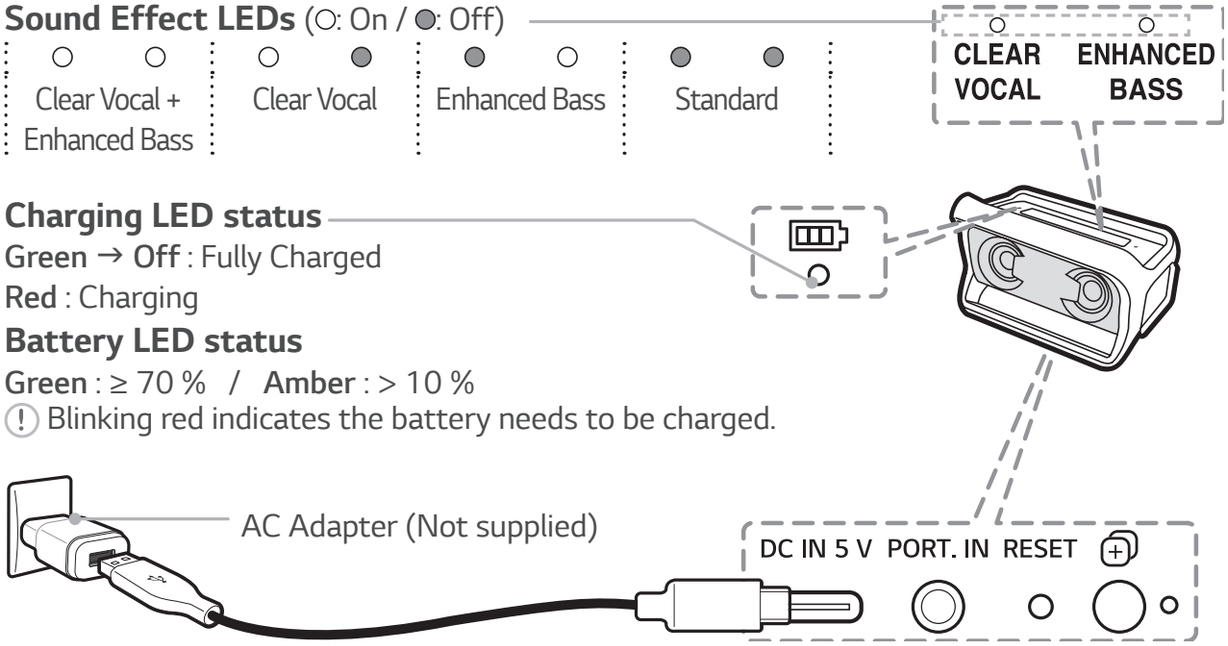

Power	Power On / Off ····· Press ⏻
Battery	Check Battery Status ····· Hold ⏻ for 2 seconds
Bluetooth	To pair your mobile device, select ***LG-PK5(xx)*** from device list. (**Bluetooth** LED: Blink → ON)
	Ready to pair another device ····· Hold ✱ for 2 seconds
Playback Controls	Play / Pause ····· Press ▷II
	Forward Skip ····· Press ▷II X 2
	Backward Skip ····· Press ▷II X 3

Handsfree	Receive / Disconnect ····· Press ⏯
Volume	Volume Control ····· Press — or +
Voice Command	Use voice command of your smart device ····· Press 🎙 ⓘ Make sure use the smart device that has voice command.
Mood light	Party (Various colors) → Water (Blue tone) → Forest (Yellow tone) → [My style (Customizing)] → Off ····· Hold 💡 for 2 seconds ⓘ To enable My Style option, you have to customize with "Music Flow Bluetooth" app. (Only Android)
Sound effect	Enjoy premium sound with MERIDIAN technology ····· Press **CLEAR VOCAL** and/or **ENHANCED BASS** ⓘ Fine-tune sound to provide optimal high-quality sound. For more information, refer to online owner's manual.
Dual Play (Optional)	You need two speakers. Press and hold each speaker's ⊞ button for 2 seconds. (Dual play LED: Blink → ON)

ⓘ Connect **Bluetooth** prior to use the Playback controls, Handsfree and Voice command.

Multi phone pairing

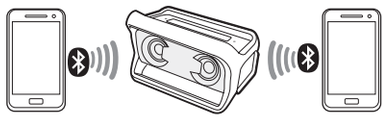

Dual Play

Controller App

Specification

Power Supply:
- 5 V ⎓ 1.8 A (AC Adapter)
- Built-in rechargeable battery

Power consumption: Refer to the main label.
Dimensions (W x H x D):
- Approx. 220 mm X 129 mm X 119 mm

Operating Temperature: 5 °C to 35 °C
Operating Humidity: 5 % to 60 %
Water-proof: IPX5
- Degree of protection against jets of water.

Battery Life: Approx. 18 hours
(Varies by volume level and audio content.)

- Design and specifications are subject to change without notice.

Important Notice

- Fully charge the device before using for the first time.
- It is recommended that you use the 5 V AC adapter (more than 1.8 A) with this unit
- For more information on Dual Play (Connection, Compatible models etc.), refer to online owner's manual.
  - The speaker might not synchronize sound with visuals in Dual play.
- To enjoy more features, download the "Music Flow Bluetooth" App to your device. (Only Android)
- **Resetting**
  In the case of the speaker freezing due to malfunction, press the **RESET** button using an object like a thin pin.

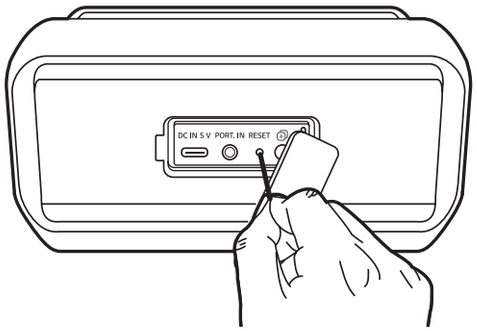

For more information, download the online owner's manual. http://www.lg.com

Safety Information

CAUTION: TO REDUCE THE RISK OF ELECTRIC SHOCK DO NOT REMOVE COVER (OR BACK) NO USER-SERVICEABLE PARTS INSIDE REFER SERVICING TO QUALIFIED SERVICE PERSONNEL.

This lightning flash with arrowhead symbol within an equilateral triangle is intended to alert the user to the presence of uninsulated dangerous voltage within the product's enclosure that may be of sufficient magnitude to constitute a risk of electric shock to persons.

The exclamation point within an equilateral triangle is intended to alert the user to the presence of important operating and maintenance (servicing) instructions in the literature accompanying the product.

WARNING:

- TO PREVENT FIRE OR ELECTRIC SHOCK HAZARD, DO NOT EXPOSE THIS PRODUCT TO RAIN OR MOISTURE.
- Do not install this equipment in a confined space such as a book case or similar unit.
- This unit contains magnets which can be harmful to some kind of object (Ex : Magnetic card, Pacemaker etc..).

CAUTION:

- Do not block any ventilation openings. Install in accordance with the manufacturer's instructions. Slots and openings in the cabinet are provided for ventilation and to ensure reliable operation of the product and to protect it from over heating. The openings should never be blocked by placing the product on a bed, sofa, rug or other similar surface. This product shall not be placed in a built-in installation such as a bookcase or rack unless proper ventilation is provided or the manufacturer's instruction has been adhered to.

- The apparatus should not be exposed to water (dripping or splashing) and no objects filled with liquids, such as vases, should be placed on the apparatus.
- No naked flame sources, such as lighted candles, should be placed on the apparatus.
- It is recommended that you use the 5 V AC adapter (more than 1.8 A) with this device. If you do not use the recommended adapter, charging is unavailable or charging time may differ.
- To avoid fire or electric shock, do not open the unit. contact to qualified personnel only.
- Do not leave the unit in a place near the heating appliances or subject to direct sunlight, moisture, or mechanical shock.
- The Power Plug is the disconnecting device. In case of an emergency, the Power Plug must remain readily accessible.
- To clean the unit, use a soft, dry cloth. If the surfaces are extremely dirty, use a soft cloth lightly moistened with a mild detergent solution. Do not use strong solvents such as alcohol, benzine, or thinner, as these might damage the surface of the unit.
- Do not use volatile liquids such as insecticide spray near the unit. Wiping with strong pressure may damage the surface. Do not leave rubber or plastic products in contact with the unit for a long period of time.
- Do not place the unit over the vehicle's air bag. When the air bag deploys, it may result in injury. Before using in the car, fix the unit.
- Do not use the handsfree function during driving a car.
- Do not leave the unit on an unstable place such as high shelves. it may fall down because of the vibration of the sound.
- Do not use high voltage products around this product. (ex. Electrical swatter) This product may malfunction due to electrical shock.

CAUTION when using this product in environments of low humidity.

- It may cause static electricity in environments of low humidity.
- It is recommended to use this product after touching any metal object which conducts electricity.

NOTICE: For safety marking information including product identification and supply ratings, please refer to the main label on the bottom or the other surface of the product.

CAUTION: Internal lithium battery in the unit should not be replaced by user because of danger of explosion if battery is incorrectly replaced ,and must be replaced with the same type battery by expert.

Symbols

~	Refers to alternating current (AC).
⎓	Refers to direct current (DC).
⧈	Refers to class II equipment.
⏻	Refers to stand-by.
I	Refers to “ON” (power).
ϟ	Refers to dangerous voltage.

For models using a battery
This device is equipped with a portable battery or accumulator.

How to Safely remove the batteries or the battery pack from the equipment: To Remove the old batteries or battery pack, follow the assembly steps in reverse order. To prevent contamination of the environment and bring on possible threat to human and/or animal health, the old batteries or the battery pack must be put in an appropriate container at designated collection points. Do not dispose of batteries or battery pack together with other waste. It is recommended that you use local, free reimbursement systems batteries or battery packs, (may not be available in your area). The batteries or the battery pack should not be exposed to excessive heat such as sunshine, fire or the like.

Declaration of Conformity

Hereby, LG Electronics declares that the radio equipment type Portable Bluetooth Speaker is in compliance with Directive 2014/53/EU. The full text of the EU declaration of conformity is available at the following internet address:

http://www.lg.com/global/support/cedoc/cedoc#

Frequency range	Output power (Max.)
2402 to 2480 MHz	10 dBm

WEEE

Disposal of your old appliance

1. This crossed-out wheeled bin symbol indicates that waste electrical and electronic products (WEEE) should be disposed of separately from the municipal waste stream.
2. Old electrical products can contain hazardous substances so correct disposal of your old appliance will help prevent potential negative consequences for the environment and human health. Your old appliance may contain reusable parts that could be used to repair other products, and other valuable materials that can be recycled to conserve limited resources.
3. You can take your appliance either to the shop where you purchased the product, or contact your local government waste office for details of your nearest authorised WEEE collection point. For the most up to date information for your country please see www.lg.com/global/recycling

Battery

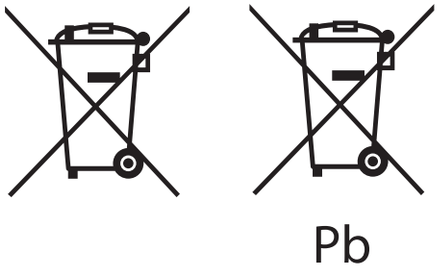

Disposal of waste batteries/accumulators

1. This symbol may be combined with chemical symbols for mercury (Hg), cadmium (Cd) or lead (Pb) if the battery contains more than 0.0005% of mercury, 0.002% of cadmium or 0.004% of lead.
2. All batteries/accumulators should be disposed separately from the municipal waste stream via designated collection facilities appointed by the government or the local authorities.
3. The correct disposal of your old batteries/ accumulators will help to prevent potential negative consequences for the environment, animal and human health.
4. For more detailed information about disposal of your old batteries/ accumulators, please contact your city office, waste disposal service or the shop where you purchased the product. (http://www.lg.com/global/sustainability/ environment/take-back-recycling/globalnetwork- europe)

Removal of waste batteries and accumulators

(Product with embedded battery ONLY)

In case this product contains a battery incorporated within the product which cannot be readily removed by endusers, LG recommends that only qualified professionals remove the battery, either for replacement or for recycling at the end of this product's working life. To prevent damage to the product, and for their own safety, users should not attempt to remove the battery and should contact LG Service Helpline, or other independent service providers for advice.
Removal of the battery will involve dismantling of the product case, disconnection of the electrical cables/ contacts, and careful extraction of the battery cell using specialized tools. If you need the instructions for qualified professionals on how to remove the battery safely, please visit http://www.lge.com/global/sustainability/environment/take-back-recycling.

Technology with the human touch

GUARANTEE

- LG Electronics U.K. Ltd. will provide the following services in order to expedite this Guarantee.

1. All faulty components which fail due to defective manufacture will be replaced free of charge for a period of 12 months from the original date of purchase.
2. The dealer (or his service agent) who sold the product will be reimbursed for any labour provided in the repair of this LG equipment, for a period of 12 months from the original date of purchase. These claims must be made in accordance with the published scale of service charges and relevant claims procedure.

PLEASE NOTE:

A. The dealer may restrict the guarantee to the original purchaser.

B. The dealer is not obliged to carry out service under guarantee if unauthorized modifications are made to the apparatus, or if non standard components are used or if the serial number of the apparatus is removed, defaced, misused, or altered.

C. Any claims made under guarantee must be directed to the dealer from whom the equipment was originally purchased. The dealer may, before carrying out service under guarantee, require a receipted account as evidence of the date of purchase.

D. We respectfully point out that your dealer is not obligated to replace batteries if they become exhausted or worn in use.

E. Aerial alignment and consumer control adjustments are not covered by this guarantee.

This guarantee does not affect your statutory rights.

- REQUIREMENTS TO MAINTAIN WARRANTY COVERAGE:
  RETAIN YOUR RECEIPT TO PROVE DATE OF PURCHASE. A COPY OF YOUR RECEIPT MUST BE SURRENDERED AT THE TIME GUARANTEE SERVICE IS PROVED.
- Product Registration Card :
  It is helpful to complete at least your name, address, phone, model & serial numbers and return it. This will enable LG to assist you in the future should you lose your receipt, your units be stolen, or should modifications be necessary.
- To obtain information or assistance:
  Call UK: 0344 847 5454 IE: 01 686 9454

MODEL NO.*	SERIAL NO.*	DATE OF PURCHASE.*

In all cases of difficulty - consult your LG dealer from whom the product was purchased

LGEUK Website : www.lg.com/uk
(Service website : www.lg.com/uk/support)

LG
Life's Good