LG
Life's Good

Owner's Manual

UltraGear™

(OLED Monitor)

Please read this manual carefully before operating your set and retain it for future reference.

39GS95QE 34GS95QE
39GS95QX 34GS95QX

www.lg.com

Copyright © 2024 LG Electronics Inc. All Rights Reserved.

TABLE OF CONTENTS

ASSEMBLING AND PREPARING 4

- Installing 5
  - Moving and Lifting the Monitor 5
  - Installing on a Table 6
  - Using the Kensington Lock 6
  - Installing on the Wall 7
- Product and Button Description 9
  - How to Use the Joystick Button 10
  - Adjusting the Stand Height 10
  - Adjusting the Angle 11
- Supported Drivers and Software 11

USING THE MONITOR 12

- Connecting to a PC 12
  - HDMI Connection 12
  - DisplayPort Connection 13
- Connecting AV Devices 13
  - HDMI Connection 13
- Connecting Peripherals 14
  - USB Device connection 14
  - Headset Connection 14

USER SETTINGS 15

- Activating the Main Menu 15
  - Main Menu Features 15
  - Menu Settings 16
  - [Game Adjust] 16
  - [Picture Adjust] 17
  - [Sound] 18
  - [Input] 18
  - [General] 19
- Important Information for Preventing Image Retention 20
  - Examples of Images that may Cause Image Retention 20
  - Recommendations For Preventing Image Retention 20
  - Safety precautions for prolonged use 20

PRODUCT SPECIFICATION 21
- Support Mode 22
(Preset Mode, HDMI) 22
(Preset Mode, DisplayPort) 23
HDMI Timing (Video) 24
TROUBLESHOOTING 25
LICENSE 26
OPEN SOURCE SOFTWARE NOTICE INFORMATION 26
BEEP GUIDE 27
LIMITED WARRANTY (USA) 30
LIMITED WARRANTY (CANADA) 32

ASSEMBLING AND PREPARING

CAUTION

- Always use genuine LG components to ensure safety and product performance.
- The product warranty will not cover damage or injury caused by the use of unauthorized components.
- It is recommended that use the supplied components.
- The product figures and screen displays used in this manual are examples to help consumers use the product and may differ from the actual product.
- Do not apply foreign substances (oils, lubricants, etc.) to the screw parts when assembling the product. (Doing so may damage the product.)
- Applying excessive force when tightening screws may cause damage to the monitor. Damage caused in this way will not be covered by the product warranty.
- Do not carry the monitor upside down by just holding the base. This may cause the monitor to fall off the stand and could result in personal injury.
- When lifting or moving the monitor, do not touch the monitor screen. The force applied to the monitor screen may cause damage to it.
- For wave pattern on appearance, unlike the general method of coating, it's applied to added glittering material in raw material. With no peeled-off appearance, it has good durability. Please use it with confidence because there is no problem in using the product at all.

NOTE

- The components may look different from those illustrated here.
- Without prior notice, all product information and specifications contained in this manual are subject to change to improve the performance of the product.
- To purchase optional accessories, visit an electronics store or an online shopping site, or contact the retailer from which you purchased the product.
- The power cord provided may differ depending upon the region.

Installing

Moving and Lifting the Monitor

When moving or lifting the monitor, follow these instructions to prevent the monitor from being scratched or damaged and to ensure safe transportation, regardless of its shape or size.

- Place the monitor in the original box or packing material before attempting to move it.
- Before moving or lifting the monitor, disconnect the power cord and all other cables.
- Hold the bottom and side of the monitor frame firmly. Do not hold the panel itself.
- When holding the monitor, the screen should face away from you to prevent it from being scratched.
- When transporting the monitor, do not expose the monitor to shock or excessive vibration.
- When moving the monitor, keep it upright and never turn the monitor on its side or tilt it sideways.

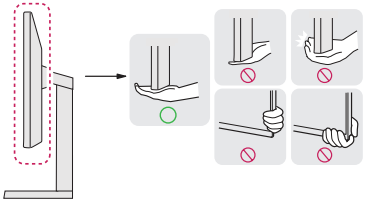



CAUTION

- Avoid touching the monitor screen as much as possible.
  - This may result in damage to the screen or some of the pixels used to create images.
- If you use the monitor panel without the stand base, its power button may cause the monitor to become unstable and fall, resulting in damage to the monitor or human injury. In addition, this may cause the power button to malfunction.

Installing on a Table

- Lift the monitor and place it on the table in an upright position. Place the monitor at least 100 mm (3.9 inches) away from the wall to ensure sufficient ventilation.

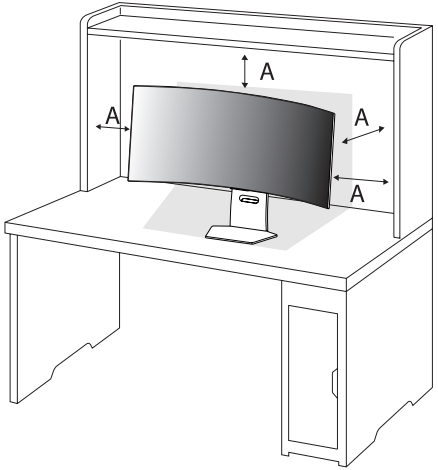

A: 100 mm (3.9 inches)

CAUTION

- Unplug the power cord before moving or installing the monitor. There is risk of electric shock.
- Make sure to use the power cord that is provided in the product package and connect it to a grounded power outlet. (Depending on country)

Using the Kensington Lock

For more information on installation and usage, refer to the Kensington lock owner's manual or visit the website at *http://www.kensington.com*.

Connect the monitor to a table using the Kensington security system cable.

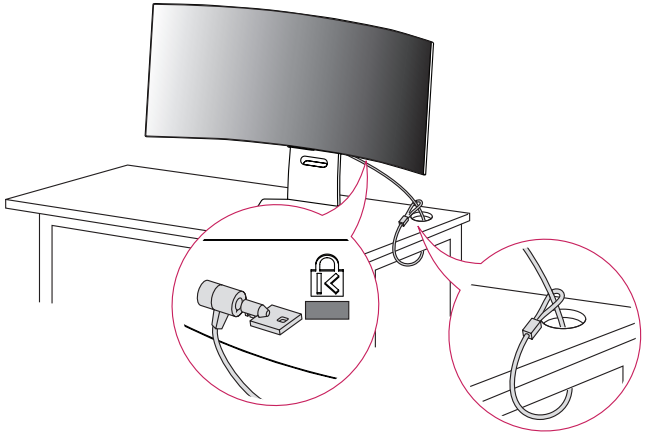

NOTE

- The Kensington security system is optional. You can obtain optional accessories from most electronics stores.

Installing on the Wall

This monitor meets the specifications for the wall mount plate or other compatible devices.

Install the monitor at least 100 mm (3.9 inches) away from the wall and leave about 100 mm (3.9 inches) of space at each side of the monitor to ensure sufficient ventilation. Detailed installation instructions can be obtained from your local retail store. Alternatively, please refer to the manual for how to install and set up a tilting wall mounting bracket.

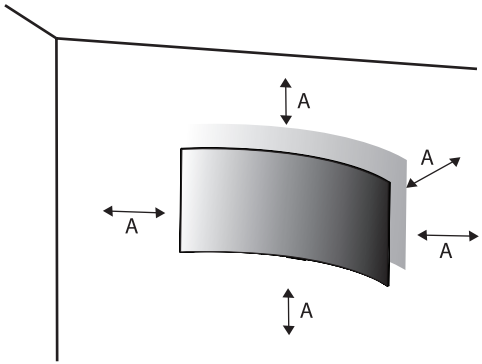

A: 100 mm (3.9 inches)

Installing the Wall Mount Plate

To install the monitor to a wall, attach a wall mounting bracket (optional) to the back of the monitor.

Make sure that the wall mounting bracket is securely fixed to the monitor and to the wall.

Wall Mount (mm)	100 X 100 (3.9 x 3.9 inches)
Standard screw	M4 x L10
Number of screws	4
Wall Mount Plate (Optional)	LSW149 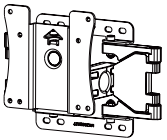

NOTE

- Use the screws specified by VESA standards.
- The wall mount kit includes the installation guide and all necessary parts.
- The wall mounting bracket is optional. You can obtain optional accessories from your local dealer.
- The length of the screw may differ for each wall mounting bracket. If you use screws longer than the standard length, it may damage the inside of the product.
- For more information, please refer to the user manual for the wall mounting bracket.
- Be careful not to apply too much force while mounting the wall mount plate as it may cause damage to the screen.
- Remove the stand before installing the monitor on a wall mount by performing the stand attachment in reverse.

CAUTION

- Unplug the power cord before moving or installing the monitor to avoid electric shock.
- Installing the monitor on the ceiling or on a slanted wall may result in the monitor falling off, which could lead to injury. Use an authorized LG wall mount and contact the local dealer or qualified personnel.
- To prevent injury, this apparatus must be securely attached to the wall in accordance with the installation instructions.
- Applying excessive force when tightening screws may cause damage to the monitor. Damage caused in this way will not be covered by the product warranty.
- Use the wall mounting bracket and screws that conform to VESA standards. Damage caused by the use or misuse of inappropriate components will not be covered by the product warranty.
- When measured from the back of the monitor, the length of each installed screw must be 8 mm (0.3 inches) or less.

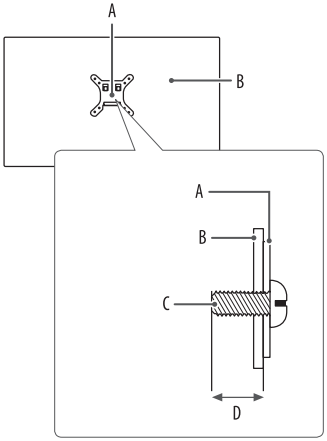

A: Wall Mount Plate
B: Back of the Monitor
C: Standard screw
D: Max. 8 mm (0.3 inches)

Product and Button Description

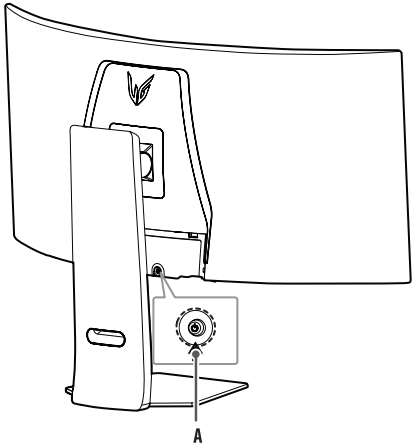

A: Joystick Button

How to Use the Joystick Button

You can easily control the functions of the monitor by pressing the joystick button or moving it left/right/up/down with your finger.

Basic Functions

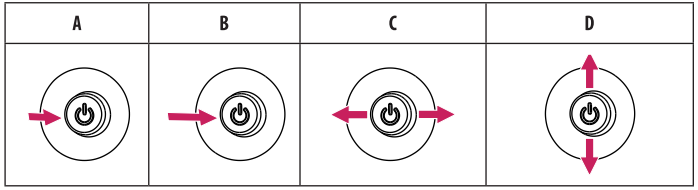

A (Power on): Press the joystick button once with your finger to turn on the monitor.

B (Power off): Press and hold the joystick button once more than 5 seconds with your finger to turn off the monitor.

C (Volume control): You can control the volume by moving the joystick button left/right.

D Enters the [Accessibility] menu.

Adjusting the Stand Height

1 Place the monitor mounted on the stand base in an upright position.

2 Handle the monitor with both hands for safety.

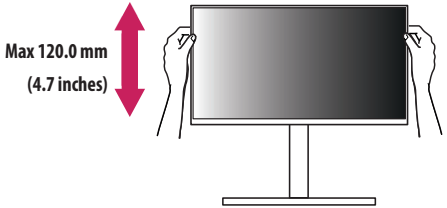

WARNING

- When adjusting the screen height, do not place your hand on the stand body to avoid injury to your fingers.

Adjusting the Angle

1 Place the monitor mounted on the stand base in an upright position.

2 Adjust the angle of the screen.

The angle of the screen can be adjusted forward or backward from -10° to 15° for a comfortable viewing experience. And you can also adjust the angle of the screen by 10 degrees to the left or to the right.

WARNING

- To avoid injury to the fingers when adjusting the screen, do not hold the lower part of the monitor's frame as illustrated below.
- Be careful not to touch or press the screen area when adjusting the angle of the monitor.

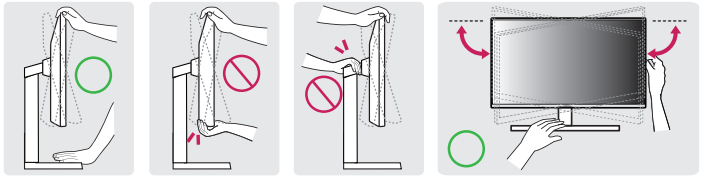

NOTE

- The left or right side of the monitor head can be slightly rotated up or down (up to 3°). Adjust the horizontal level of the monitor head.

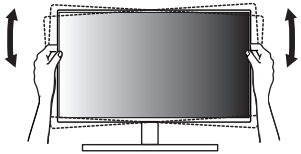

Supported Drivers and Software

You can download and install the latest version from the LGE website (*www.lg.com*).

- Monitor Driver / OnScreen Control / LG Calibration Studio / Dual Controller

USING THE MONITOR

- Illustrations in this manual may differ from the actual product.

Press the joystick button, go to [Settings] > [Input], and then select the input option.

CAUTION

- If you use generic cables not certified by LG, the screen may not display or there may be image noises.
- Do not press the screen for a prolonged time. This may cause image distortion.
- Do not display a still image on the screen for a prolonged time. This may cause image retention. Use a PC screensaver if possible.
- When connecting the power cord to the outlet, use a grounded (3-hole) power strip or a grounded power outlet. (Depending on country)
- The monitor may flicker when turned on in an area where the temperature is low. This is normal.
- Sometimes red, green, or blue spots may appear on the screen. This is normal.
- Make sure to use the supplied cable of the product. Otherwise, this may cause the device to malfunction.
- When using the monitor for the first time or reusing it after long-term storage, execute [OLED Image Cleaning] before use. (Go to [Settings] > [General] > [OLED Image Cleaning])

Connecting to a PC

- This monitor supports the Plug and Play* feature.

* Plug and Play: A feature that allows you to add a device to your computer without having to reconfigure anything or install any manual drivers.

HDMI Connection

Transmits digital video and audio signals from your PC to the monitor.

NOTE

- Using a DVI to HDMI / DP (DisplayPort) to HDMI cable may cause compatibility issues.
- Use a certified cable with the HDMI logo attached. If you do not use a certified HDMI cable, the screen may not display or a connection error may occur.
- Recommended HDMI cable types
  - Ultra High Speed HDMI®/™ cable
  - Ultra High Speed HDMI®/™ cable with Ethernet

DisplayPort Connection

Transmits digital video and audio signals from your PC to the monitor.

NOTE

- There may be no video or audio output depending on the DP (DisplayPort) version of the PC.
- If you are using a Mini DisplayPort output graphics card, use a Mini DP to DP (Mini DisplayPort to DisplayPort) cable or gender that supports DisplayPort1.4. (Sold separately)

Connecting AV Devices

HDMI Connection

HDMI transmits digital video and audio signals from your AV device to the monitor.

NOTE

- Using a DVI to HDMI / DP (DisplayPort) to HDMI cable may cause compatibility issues.
- Use a certified cable with the HDMI logo attached. If you do not use a certified HDMI cable, the screen may not display or a connection error may occur.
- Recommended HDMI cable types
  - Ultra High Speed HDMI®/™ cable
  - Ultra High Speed HDMI®/™ cable with Ethernet

Connecting Peripherals

USB Device connection

The USB port on the product functions as a USB hub.

To use USB 3.0, connect the A-B type USB 3.0 cable of the product to the PC.

Peripheral devices connected to the USB IN port can be controlled from the PC.

NOTE

- It is recommended you install all Windows Updates to keep your Windows up-to-date before connecting to the product for use.
- Peripheral devices are sold separately.
- A keyboard, mouse, or USB device can be connected to the USB port.
- The charging speed may vary depending on the device.

CAUTION

- Cautions when using a USB device.
  - A USB device with an automatic recognition program installed, or that uses its own driver, may not be recognized.
  - Some USB devices may not be supported or may not work properly.
  - It is recommended to use a USB hub or hard disk drive with power supplied. (If the power supply is not adequate, the USB device may not be recognized properly.)

Headset Connection

Connect peripherals to the monitor via the headset port.

NOTE

- Peripheral devices are sold separately.
- Depending on the audio settings of the PC and external device, headset functions may be limited.
- The microphone works only when the USB port on the monitor is connected to the USB port on the PC.



USER SETTINGS

NOTE

- Your monitor's OSD (On Screen Display) may differ slightly from that shown in this manual.
- When [Beep Guide] is activated, pressing the joystick button will take you to [Settings] right away.

Activating the Main Menu



Joystick Button

1 Press the joystick button on the back of the monitor.
2 Move the joystick up/down and left/right to set the options.

Main Menu Features

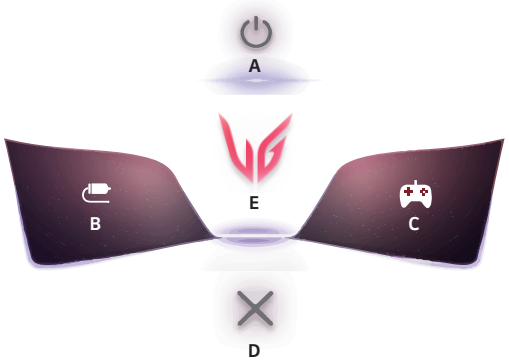

Main Menu	Description
A: [Power Off]	Turns off the monitor.
B: [Input]	Sets input mode. (Default) • You can customize the left (B) of the main menu to access your preferred menu easily. ([Settings] > [General] > [User-defined Key 1])
C: [Game Mode]	Sets the game mode for gaming. (Default) • You can customize the right (C) of the main menu to access your preferred menu easily. ([Settings] > [General] > [User-defined Key 2])
D: [Exit]	Exit the main menu.
E: [Settings]	Configures the screen settings.

Menu Settings

1 To view the OSD menu, press the joystick button at the back of the monitor and then enter the [Settings].
2 Move the joystick up/down and left/right to set the options.
3 To return to the upper menu or set other menu items, move the joystick to ◀ or pressing (⏻) it.
4 If you want to exit the OSD menu, move the joystick to ◀ until you exit.



[Game Adjust] [Picture Adjust] [Sound] [Input] [General]

[Game Adjust]

[Settings] > [Game Adjust]

- [Game Mode]: you can select picture modes for game display settings.
  - [Gamer 1]/[Gamer 2]: [Gamer 1] and [Gamer 2] picture modes allow you to save two sets of customized display settings, including game-related setup options.
  - [FPS]: This mode is optimized for FPS games. It is suitable for very dark FPS games.
  - [RTS]: This mode is optimized for RTS games.
  - [Vivid]: Optimized the screen for vivid colors.
  - [Reader]: Optimizes the screen for reading documents. (for SDR only)
  - [HDR Effect]: Optimizes the screen for high dynamic range. (for SDR only)
  - [sRGB]: A standard RGB color space for the monitor and printer. (for SDR only)
  - [Color Weakness]: This mode is for users who cannot distinguish between red and green. It enables users with color weakness to easily distinguish between the two colors. (for SDR only)
  - [Calibration 1]/[Calibration 2]: Adjusts to the calibrated screen. Please install LG Calibration Studio to run calibration. (for SDR only)

NOTE

- The [Game Mode] can be set depends on the Input signal.
- If the [Game Mode] is changed in the DP (DisplayPort) input, the screen may flicker or the resolution of your PC screen may be affected.
- HDR content may not display correctly depending on Windows OS settings, please check HDR On/Off settings in Windows.
- When the HDR function is turned on, the characters or picture quality may be poor according to Graphic card performance.
- While the HDR function is on, screen flickering or cracking may occur when changing the monitor input or power on/off according to Graphic card performance.
- For information about whether the graphics card and game support HDR, visit their manufacture's website.

- [Adaptive-Sync]/[VRR]: This function shows a clear screen without screen tearing or stuttering in the game environment.

  However, screen flickering may occur in some game environments.
  - Supported Interface: DisplayPort (Adaptive-Sync), HDMI (VRR).
  - Supported Graphic Card: A graphic card that supports NVIDIA's G-SYNC or AMD's FreeSync is necessary.
  - Supported Version: Make sure to update the graphic card to the latest driver.
  - For more information and requirement, refer to NVIDIA website (*www.nvidia.com*) and AMD website (*www.amd.com*).
- [Black Stabilizer]: You can control the black contrast to have better visibility in dark scenes. You can easily distinguish objects on dark game screens.
- [Crosshair]: Crosshair provides a mark on the center of the screen for First Person Shooter (FPS) games.

  Users can select the crosshair that fits their gaming environment among four different crosshairs.
- [FPS Counter]
  - [On]: The indicator is displayed on the upper left of the screen. It will reflect the actual frame rate that is received at the input. You can also adjust the position of [FPS Counter]. (upper left/upper right/lower right/lower left)
  - [Off]: Does not use the [FPS Counter] feature.
  - [FPS Counter] and [Crosshair] feature can not be used at the same time.
- [Game Reset]: Returns game settings to the default settings.

[Picture Adjust]

[Settings] > [Picture Adjust]

- [Brightness]: Adjusts the brightness of the screen.
- [Peak Brightness]: Adjust the panel peak brightness for a brighter screen.
- [Contrast]: Adjusts the contrast of the screen.
- [Sharpness]: Adjusts the sharpness of the screen.
- [Gamma]
  - [Mode 1], [Mode 2], [Mode 3]: The higher the gamma value, the darker the image becomes. Likewise, the lower the gamma value, the lighter the image becomes.
  - [Mode 4]: If you do not need to adjust the gamma settings, select [Mode 4].
- [Color Temp]: Set your own color temperature.
  - [Custom]: The user can customize the red, green and blue color.
  - [Warm]: Sets the screen color to a reddish tone.
  - [Medium]: Sets the screen color to between a red and blue tone.
  - [Cool]: Sets the screen color to a bluish tone.
  - [Manual]: The user can fine-tune the color temperature.
- [R/G/B]: You can customize the picture color using red, green, and blue colors.

- [Six Color]: Meets the user requirements for colors by adjusting the hue and saturation of the six colors (red, green, blue, cyan, magenta, and yellow) and then saving the settings.
  - Hue: Adjusts the tone of the screen colors.
  - Saturation: Adjusts the saturation of the screen colors. The lower the value, the less saturated and brighter the colors become. The higher the value, the more saturated and darker the colors become.
- [Black Level]: Sets the offset level (for HDMI only).

  Offset: as a reference for a video signal, this is the darkest color the monitor can display.
  - [High]: Keeps the current contrast ratio of the screen.
  - [Low]: Lowers the black levels and raises the white levels from the current contrast ratio of the screen.
- [Picture Reset]: Returns picture and color to the default settings.

[Sound]

[Settings] > [Sound]

- [DTS Headphone:X]: Enables the realization of three-dimensional sound with headphones or earphone.
  - [Game]: This mode is optimized for Game.
  - [Entertainment]: This mode is optimized for Entertainment.
  - [Sports]: This mode is optimized for Sports.
  - [Off]: Disables DTS Headphone:X function.
- [Volume]: Adjusts the volume level.
  - You can adjust [Mute] / [Unmute] by moving the joystick button to ▼ in the [Volume] menu.

[Input]

[Settings] > [Input]

- [Input List]: Selects the input mode.

PBP/PIP Connection		Sub Screen		
		HDMI 1	HDMI 2	DisplayPort
Main Screen	HDMI 1	-	o	o
	HDMI 2	o	-	o
	DisplayPort	o	o	-

- [Aspect Ratio]: Adjusts the aspect ratio of the screen. The display may look the same for [Full Wide], [Original], and [Just Scan] options at the recommended resolution.
  - [Full Wide]: Displays the video in widescreen, regardless of the video signal input.
  - [Original]: Displays video according to the aspect ratio of the video signal input.
  - [Just Scan]: The aspect ratio is not adjusted from the original.
  - [Cinema 1]: Enlarges the screen with an aspect ratio of 21:9.
  - [Cinema 2]: Enlarges the screen with an aspect ratio of 21:9, including the black box at the bottom for subtitles.
- [Auto Input Switch]: When [Auto Input Switch] is set to [On], display will automatically switch to new input when connected.
- [PBP / PIP]: Displays the screens of two input modes on one monitor.
- [PIP Size]: Changes the size of the PIP sub-screen.
- [PIP Position]: Changes the position of the PIP sub-screen.
- [Screen Switch]: Switches the main screen/sub-screen in PBP/PIP mode.
- [Sound Switch]: Switches the main screen/sub-screen sound in PBP/PIP mode.

NOTE

- If not using the [PBP / PIP] feature, [PIP Size], [PIP Position], [Screen Switch] and [Sound Switch] are deactivated.
- Some features and HDR functions are not supported in PBP/ PIP mode.

[General]

[Settings] > [General]

- [Language]: Sets the menu screen to the desired language.
- [OLED Screen Move]: Moving the screen minutely at regular intervals helps to prevent panel noise caused by images that have been fixed for a long time.
  Supports four modes with different screen movement paths, pixel counts and cycles. Select the appropriate mode in accordance with the usage environment.
- [OLED Screen Saver]: If there is no movement on the screen for a certain period of time, the screen turns off automatically.
- [OLED Image Cleaning]: Corrects screen problems that may occur when the monitor is turned on for a long time. This will take approximately 10 minutes to complete.

  It is automatically executed when entering power saving mode or turning off the power after more than 4 hours of use from the previous [OLED Image Cleaning] completion.

  Do not wipe or touch the screen while the monitor is performing OLED image cleaning, as the created static electricity may cause incomplete OLED image cleaning.
- [Hexagon Lighting]: Sets the lighting on the back of the monitor.
  - [Static 1], [Static 2], [Static 3], [Static 4]: Sets the lighting to the desired color.
  - [Cycling]: All colors appear alternately.
  - [Off]: Turns off the light on the back of the monitor.
- [User-defined Key 1]/[User-defined Key 2]: You can customize the main menu to access your preferred menu easily. [User-defined Key 1] and [User-defined Key 2] appear at the left/right of the main menu.
- [SMART ENERGY SAVING]: Conserve energy by using luminance compensation algorithm.
  - [High]: Saves energy using the high-efficiency [SMART ENERGY SAVING] feature.
  - [Low]: Saves energy using the low-efficiency [SMART ENERGY SAVING] feature.
  - [Off]: Disables the feature.
  - The value of energy saving data may differ depending on panel and panel suppliers.
  - If you select the option of [SMART ENERGY SAVING] is [High] or [Low], monitor luminance become higher or lower depend on source.
- [Deep Sleep Mode]: When [Deep Sleep Mode] is [On], power consumption is minimized while the monitor is in standby mode.
- [Automatic Standby]: If there is no operation on the monitor for a certain period of time, the monitor will automatically switch to standby mode.
- [Input Compatibility Version]: You can set each input to match the supported version of the connected device.
  - If the connected device supports 2.1 in HDMI but the screen or sound does not work properly, set this function to 2.1(AV).
- [Buzzer]: This feature lets you set the sound generated from Buzzer when your monitor powers on.
- [OSD Lock]: This feature disables the configuration and adjustment of menus.

  All features are disabled except:
  - [Brightness] / [Contrast] in [Picture Adjust]
  - [Volume] in [Sound]
  - [Input]
  - [OSD Lock] / [Information] / [Open Source Software License] in [General]
- [Information]: The following display information will be shown; [Total Power On Time], [Resolution].
- [Open Source Software License]: If you select the [View], you can view the Open Source Software notice information.
- [Reset to Initial Settings]: Returns to the default settings.

Important Information for Preventing Image Retention

Unlike regular LED/LCD monitors, pixels in the OLED monitors emit light on their own, achieving a perfect black and creating clear images without blurring of light.

Image retention does not occur in normal use of the product, but can occur if the same screen is watched for a long time. Built-in features are available to protect the screen from possible image retention.

If a static image persists on the screen, the screen saver will automatically lower the full screen brightness, and the screen will turn off automatically after a certain period of time. When an image change is detected, the brightness is automatically restored to its original state. This is not a malfunction of the product.

Examples of Images that may Cause Image Retention

- Static images or images containing objects/information that are constantly visible in a fixed position on the screen (e.g., icons on the desktop, fixed windows such as menus, or logos while watching broadcasts, etc.)
- Fixed menu/icon on a game console or set-top box
- Fixed menu on the top corner of the web browser

Recommendations For Preventing Image Retention

- You can prevent image retention using monitor menu settings. (Go to [Settings] > [General] > [OLED Screen Move] / [OLED Screen Saver] / [OLED Image Cleaning])

Safety precautions for prolonged use

Due to the unique properties of OLED panels, the brightness may be reduced with prolonged use. Reduced brightness is permanent.

In addition, repeated use in conditions such as high temperature and high humidity or still images/high luminance may result in afterimages, image blurring, or screen malfunction.

PRODUCT SPECIFICATION

Specifications are subject to change without notice.

The symbol ~ means alternating current, and the symbol ⎓ means direct current.

Color Depth:

- 8-bit/ 10-bit color is supported.

Resolution

- Max Resolution:
  - 3440 x 1440 @ 240 Hz
- Recommended Resolution:
  - 3440 x 1440 @ 240 Hz

Environmental Conditions

- Operating Conditions
  - Temperature: 0 °C to 40 °C (32 °F to 104 °F)
  - Humidity: Less than 80 %
- Storing Conditions
  - Temperature: -20 °C to 60 °C (-4 °F to 140 °F)
  - Humidity: Less than 85 %

39GS95QE/39GS95QX

AC/DC Adaptor

- Model: ACC-LATP2
  Manufacturer: SHENZHEN HONOR ELECTRONIC CO., LTD
  - Input: 100-240 V~ 50/60 Hz 2.5 A
  - Output: 19.5 V ⎓ 10.8 A
- Model: AD10630LF
  Manufacturer: PI ELECTRONICS (H.K.) Ltd.
  - Input: 100-240 V~ 50/60 Hz 2.5 A
  - Output: 19.5 V ⎓ 10.8 A

34GS95QE/34GS95QX

AC/DC Adaptor

- Model: ACC-LATP2
  Manufacturer: SHENZHEN HONOR ELECTRONIC CO., LTD
  - Input: 100-240 V~ 50/60 Hz 2.5 A
  - Output: 19.5 V ⎓ 10.8 A
- Model: AD10630LF
  Manufacturer: PI ELECTRONICS (H.K.) Ltd.
  - Input: 100-240 V~ 50/60 Hz 2.5 A
  - Output: 19.5 V ⎓ 10.8 A
- Model: AD10760LF
  Manufacturer: PI ELECTRONICS (H.K.) Ltd.
  - Input: 100-240 V~ 50/60 Hz 2.3 A
  - Output: 20.0 V ⎓ 9.0 A
- Model: ADS-180KL-20-3 200180E
  Manufacturer: SHENZHEN HONOR ELECTRONIC CO., LTD
  - Input: 100-240 V~ 50/60 Hz 2.3 A
  - Output: 20.0 V ⎓ 9.0 A
- Model: A40-Z7370R190-140G0-E
  Manufacturer: MOSO POWER SUPPLY TECHNOLOGY CO LTD
  - Input: 100-240 V~ 50/60 Hz 2.0 A
  - Output: 19.0 V ⎓ 7.37 A
- Model: ADS-150KL-19N-3 190140E
  Manufacturer: SHENZHEN HONOR ELECTRONIC CO.,LTD
  - Input: 100-240 V~ 50/60 Hz 2.0 A
  - Output: 19.0 V ⎓ 7.37 A

39GS95QE/39GS95QX

Power Sources

- Power Rating: 19.5 V ⎓ 10.0 A

34GS95QE/34GS95QX

Power Sources

- Power Rating: 19.5 V ⎓ 10.0 A or 20.0 V ⎓ 9.0 A or 19.0 V ⎓ 7.0 A

39GS95QE/39GS95QX

Dimensions: Monitor Size (Width x Height x Depth)

- With Stand:
  - 887.8 x 611.2 x 309.9 (mm)
  - 34.9 x 24.0 x 12.2 (inches)
- Without Stand:
  - 887.8 x 404.4 x 198.0 (mm)
  - 34.9 x15.9 x 7.7 (inches)

Weight (Without Packaging)

- With Stand: 10.4 kg (22.9 lbs)
- Without Stand: 7.0 kg (15.4 lbs)

34GS95QE/34GS95QX

Dimensions: Monitor Size (Width x Height x Depth)

- With Stand:
  - 784.1 x 585.9 x 278.7 (mm)
  - 30.8 x 23.0 x 10.9 (inches)
- Without Stand:
  - 784.1 x 358.3 x 167.1 (mm)
  - 30.8 x 14.1 x 6.5 (inches)

Weight (Without Packaging)

- With Stand: 9.3 kg (20.5 lbs)
- Without Stand: 5.9 kg (13.0 lbs)

Support Mode

(Preset Mode, HDMI)

Resolution	Horizontal Frequency (kHz)	Vertical Frequency (Hz)	Polarity (H/V)	Remarks
640 x 480	31.469	59.940	-/-	
800 x 600	37.879	60.317	+/+	
1024 x 768	48.363	60.004	-/-	
1280 x 720	45.000	60.000	+/+	
1280 x 1024	79.976	75.025	+/+	
1920 x 1080	67.500	60.000	+/+	
720 x 480	29.830	59.779	+/-	Recommended ([Input]: PIP (Small))
1280 x 720	44.444	59.979	+/-	Recommended ([Input]: PIP (Large))
3440 x 1440	73.681	49.987	+/-	Recommended ([Input Compatibility Version]: [1.4])
1720 x 1440	150.931	99.954	+/-	Recommended ([Input]: PBP)
3440 x 1440	88.892	60.021	+/-	
1720 x 1440	182.979	119.986	+/-	
3440 x 1440	127.361	84.964	+/-	Recommended ([Input Compatibility Version]: [2.1(AV)])
2560 x 1440	182.996	119.998	+/-	
3440 x 1440	183.064	120.042	+/-	
3440 x 1440	222.269	144.050	+/-	
3440 x 1440	388.697	240.085	+/-	Recommended ([Input Compatibility Version]: [2.1(PC)])

(Preset Mode, DisplayPort)

Resolution	Horizontal Frequency (kHz)	Vertical Frequency (Hz)	Polarity (H/V)	Remarks
640 x 480	31.469	59.940	-/-	
800 x 600	37.879	60.317	+/+	
1024 x 768	48.363	60.004	-/-	
1280 x 720	45.000	60.000	+/+	
1280 x 1024	79.976	75.025	+/+	
1920 x 1080	67.500	60.000	+/+	
720 x 480	29.830	59.779	+/-	Recommended ([Input]: PIP (Small))
1280 x 720	44.444	59.979	+/-	Recommended ([Input]: PIP (Large))
3440 x 1440	73.681	49.987	+/-	
1720 x 1440	150.931	99.954	+/-	Recommended ([Input]: PBP)
1920 x 1080	137.327	120.041	+/-	
3440 x 1440	88.819	59.973	+/-	
1720 x 1440	182.979	119.986	+/-	
3440 x 1440	150.972	99.982	+/-	Recommended ([Input Compatibility Version]: [1.2])
3440 x 1440	183.064	120.042	+/-	
3440 x 1440	222.269	144.050	+/-	Recommended ([Input Compatibility Version]: [1.4])
3440 x 1440	388.697	240.085	+/-	Recommended ([Input Compatibility Version]: [1.4(DSC)])

- If the input timing is used outside of the supported frequency, response speed or image quality may deteriorate.
- To display the preferred timing & frequency, make sure to use the graphics card that supports DSC (Display Stream Compression).

HDMI Timing (Video)

Resolution	Horizontal Frequency (kHz)	Vertical Frequency (Hz)
480P	31.5	60
720P	45	60
1080P	67.5	60
1080P	135	120
2160P	135	60
2160P	255	120

TROUBLESHOOTING

Nothing is displayed on the screen.

- Is the monitor's power cord plugged in?
  - Check if the power cord is correctly plugged into the power outlet.
  - If the monitor is in sleep mode (standby mode), move the mouse, or press any key on the keyboard, to switch the display on.
  - Check if the computer is turned on.
- Is the monitor powered on?
  - Check if the input setting is correct. ([Settings] > [Input])
- Is the [The screen is not currently set to the recommended resolution.] message being displayed?
  - This occurs when signals transferred from the PC (graphics card) are out of the recommended horizontal or vertical frequency range of the monitor. Please see the PRODUCT SPECIFICATION section of this manual to set the appropriate frequency.
- Is the [No Signal] message being displayed?
  - This is displayed when the signal cable between the PC and the monitor is missing or disconnected. Check the cable and reconnect it.
- Is the [Out of Range] message being displayed?
  - This occurs when signals transferred from the PC (graphics card) are out of the horizontal or vertical frequency range of the monitor. Please see the PRODUCT SPECIFICATION section of this manual to set the appropriate frequency.

Do you see an "Unrecognized monitor, Plug and Play (VESA DDC) monitor found" message?

- Have you installed the display driver?
  - Be sure to install the display driver from our web site: *http://www.lg.com*.
  - Make sure to check if the graphics card supports Plug and Play function.

Screen display is unstable and shaky. / Images displayed on the monitor leave shadow trails.

- Did you select the appropriate resolution?
  - If the selected resolution is HDMI 1080i 60/50 Hz (interlaced), the screen may be flickering. Change the resolution to 1080p or the recommended resolution.
  - Not setting the graphics card to the recommended (optimal) resolution may result in blurred text, a dimmed screen, a truncated display area or misalignment of the display.
  - The setting methods may be different depending on the computer or operating system, and some resolutions may not be available depending on the performance of the graphics card. If this is the case, contact the manufacturer of the computer or graphics card for assistance.
- Are there spots on the screen?
  - When using the monitor, pixilated spots (red, green, blue, white, or black) may appear on the screen. It is not an error, nor is it related to the monitor's performance.

Some features are disabled.

- Are some functions not available when you press the Menu button?
  - The OSD is locked. Disable [OSD Lock] in [General].

No sound from the headset port.

- Are images displayed using DisplayPort or HDMI input without sound?
  - Make sure that the headset port connections are made properly.
  - Try increasing the volume with the joystick.
  - Set the audio output of the PC to the monitor you are using. (The settings may differ depending on the operating system (OS) you use.)

LICENSE

Each model has different licenses. Visit *www.lg.com* for more information on the license.

The terms HDMI, HDMI High-Definition Multimedia Interface, HDMI Trade Dress and the HDMI Logos are trademarks or registered trademarks of HDMI Licensing Administrator, Inc.

The SuperSpeed USB Trident logo is a registered trademark of USB Implementers Forum, Inc.

Manufactured under license from DTS Licensing Limited. For applicable DTS patents, see *https://xperi.com/patents/*. DTS, the Symbol, DTS and the Symbol together, Headphone:X and DTS Virtual:X are trademarks of DTS, Inc. and affiliates. DTS' software, technologies, and documentation, © DTS, Inc. and affiliates. All Rights Reserved.

VESA, VESA logo, DisplayPort compliance logo and DisplayPort compliance logo for dual-mode source devices are all registered trademarks of the Video Electronics Standards Association.

OPEN SOURCE SOFTWARE NOTICE INFORMATION

To obtain the source code that is contained in this product, under GPL, LGPL, MPL, and other open source licenses that have the obligation to disclose source code, and to access all referred license terms, copyright notices and other relevant documents, please visit *https://opensource.lge.com*.

LG Electronics will also provide open source code to you on CD-ROM for a charge covering the cost of performing such distribution (such as the cost of media, shipping, and handling) upon email request to *opensource@lge.com*.

This offer is valid to anyone in receipt of this information for a period of three years after our last shipment of this product.

BEEP GUIDE

Menu	Location
Game Adjust	1
Game Adjust - Game Mode	1 1
Game Adjust - Game Mode - Gamer 1	1 1 1
Game Adjust - Game Mode - Gamer 2	1 1 2
Game Adjust - Game Mode - FPS	1 1 3
Game Adjust - Game Mode - RTS	1 1 4
Game Adjust - Game Mode - Vivid	1 1 5
Game Adjust - Game Mode - Reader	1 1 6
Game Adjust - Game Mode - HDR Effect	1 1 7
Game Adjust - Game Mode - sRGB	1 1 8
Game Adjust - Game Mode - Color Weakness	1 1 9
Game Adjust - Game Mode - Calibration 1	1 1 10
Game Adjust - Game Mode - Calibration 2	1 1 11
Game Adjust - VRR / Adaptive-Sync	1 2
Game Adjust - VRR / Adaptive-Sync - On	1 2 1
Game Adjust - VRR / Adaptive-Sync - Off	1 2 2
Game Adjust - Black Stabilizer	1 3
Game Adjust - Black Stabilizer	1 3 1 Slider
Game Adjust - Crosshair	1 4
Game Adjust - Crosshair - Red Cross	1 4 1
Game Adjust - Crosshair - Green Cross	1 4 2
Game Adjust - Crosshair - Red Dot	1 4 3
Game Adjust - Crosshair - Green Dot	1 4 4
Game Adjust - Crosshair - Off	1 4 5
Game Adjust - FPS Counter	1 5
Game Adjust - FPS Counter - On	1 5 1
Game Adjust - FPS Counter - Off	1 5 2

Menu	Location
Game Adjust - Game Reset	1 6
Game Adjust - Game Reset - No	1 6 1
Game Adjust - Game Reset - Yes	1 6 2
Picture Adjust - Brightness	2 1
Picture Adjust - Brightness	2 1 1 Slider
Picture Adjust - Peak Brightness	2 2
Picture Adjust - Peak Brightness - High	2 2 1
Picture Adjust - Peak Brightness - Low	2 2 2
Picture Adjust - Peak Brightness - Off	2 2 3
Picture Adjust - Contrast	2 3
Picture Adjust - Contrast	2 3 1 Slider
Picture Adjust - Sharpness	2 4
Picture Adjust - Sharpness	2 4 1 Slider
Picture Adjust - Gamma	2 5
Picture Adjust - Gamma - Mode 1	2 5 1
Picture Adjust - Gamma - Mode 2	2 5 2
Picture Adjust - Gamma - Mode 3	2 5 3
Picture Adjust - Gamma - Mode 4	2 5 4
Picture Adjust - Color Temp	2 6
Picture Adjust - Color Temp - Custom	2 6 1
Picture Adjust - Color Temp - Warm	2 6 2
Picture Adjust - Color Temp - Medium	2 6 3
Picture Adjust - Color Temp - Cool	2 6 4
Picture Adjust - Color Temp - Manual	2 6 5
Picture Adjust - Color Temp - Manual	2 6 5 1 Slider
Picture Adjust - R/G/B	2 7
Picture Adjust - R/G/B - Red	2 7 1
Picture Adjust - R/G/B - Red	2 7 1 1 Slider
Picture Adjust - R/G/B - Green	2 7 2
Picture Adjust - R/G/B - Green	2 7 2 1 Slider

Menu	Location
Picture Adjust - R/G/B - Blue	2 7 3
Picture Adjust - R/G/B - Blue	2 7 3 1 Slider
Picture Adjust - Six Color	2 8
Picture Adjust - Six Color - Red Hue	2 8 1
Picture Adjust - Six Color - Red Hue	2 8 1 1 Slider
Picture Adjust - Six Color - Red Saturation	2 8 2
Picture Adjust - Six Color - Red Saturation	2 8 2 1 Slider
Picture Adjust - Six Color - Green Hue	2 8 3
Picture Adjust - Six Color - Green Hue	2 8 3 1 Slider
Picture Adjust - Six Color - Green Saturation	2 8 4
Picture Adjust - Six Color - Green Saturation	2 8 4 1 Slider
Picture Adjust - Six Color - Blue Hue	2 8 5
Picture Adjust - Six Color - Blue Hue	2 8 5 1 Slider
Picture Adjust - Six Color - Blue Saturation	2 8 6
Picture Adjust - Six Color - Blue Saturation	2 8 6 1 Slider
Picture Adjust - Six Color - Cyan Hue	2 8 7
Picture Adjust - Six Color - Cyan Hue	2 8 7 1 Slider
Picture Adjust - Six Color - Cyan Saturation	2 8 8
Picture Adjust - Six Color - Cyan Saturation	2 8 8 1 Slider
Picture Adjust - Six Color - Magenta Hue	2 8 9
Picture Adjust - Six Color - Magenta Hue	2 8 9 1 Slider
Picture Adjust - Six Color - Magenta Saturation	2 8 10
Picture Adjust - Six Color - Magenta Saturation	2 8 10 1 Slider
Picture Adjust - Six Color - Yellow Hue	2 8 11
Picture Adjust - Six Color - Yellow Hue	2 8 11 1 Slider
Picture Adjust - Six Color - Yellow Saturation	2 8 12
Picture Adjust - Six Color - Yellow Saturation	2 8 12 1 Slider
Picture Adjust - Black Level	2 9
Picture Adjust - Black Level - High	2 9 1
Picture Adjust - Black Level - Low	2 9 2

Menu	Location
Picture Adjust - Picture Reset	2 10
Picture Adjust - Picture Reset - No	2 10 1
Picture Adjust - Picture Reset - Yes	2 10 2
Sound	3
Sound - DTS Headphone:X	3 1
Sound - DTS Headphone:X - Game	3 1 1
Sound - DTS Headphone:X - Entertainment	3 1 2
Sound - DTS Headphone:X - Sports	3 1 3
Sound - DTS Headphone:X - Off	3 1 4
Sound - Volume	3 2
Sound - Volume	3 2 1 Slider
Input	4
Input - Input List	4 1
Input - Input List - HDMI 1 / Main	4 1 1
Input - Input List - Main - HDMI 1	4 1 1 1
Input - Input List - Main - HDMI 2	4 1 1 2
Input - Input List - Main - DisplayPort	4 1 1 3
Input - Input List - HDMI 2 / Sub	4 1 2
Input - Input List - Sub - HDMI 1	4 1 2 1
Input - Input List - Sub - HDMI 2	4 1 2 2
Input - Input List - Sub - DisplayPort	4 1 2 3
Input - Input List - DisplayPort	4 1 3
Input - Aspect Ratio	4 2
Input - Aspect Ratio - Full Wide / Main	4 2 1
Input - Aspect Ratio - Main - Full Wide	4 2 1 1
Input - Aspect Ratio - Main - Original	4 2 1 2
Input - Aspect Ratio - Main - Just Scan	4 2 1 3
Input - Aspect Ratio - Main - Cinema 1	4 2 1 4
Input - Aspect Ratio - Main - Cinema 2	4 2 1 5
Input - Aspect Ratio - Original / Sub	4 2 2

Menu	Location
Input - Aspect Ratio - Sub - Full Wide	4 2 2 1
Input - Aspect Ratio - Sub - Original	4 2 2 2
Input - Aspect Ratio - Just Scan	4 2 3
Input - Aspect Ratio - Cinema 1	4 2 4
Input - Aspect Ratio - Cinema 2	4 2 5
Input - Auto Input Switch	4 3
Input - Auto Input Switch - On	4 3 1
Input - Auto Input Switch - Off	4 3 2
Input - PBP / PIP	4 4
Input - PBP / PIP - Off	4 4 1
Input - PBP / PIP - Off - HDMI 1	4 4 1 1
Input - PBP / PIP - Off - HDMI 2	4 4 1 2
Input - PBP / PIP - Off - DisplayPort	4 4 1 3
Input - PBP / PIP - PBP	4 4 2
Input - PBP / PIP - PIP	4 4 3
Input - PIP Size	4 5
Input - PIP Size - Small	4 5 1
Input - PIP Size - Large	4 5 2
Input - PIP Position	4 6
Input - PIP Position - Bottom Right	4 6 1
Input - PIP Position - Bottom Left	4 6 2
Input - PIP Position - Top Left	4 6 3
Input - PIP Position - Top Right	4 6 4
Input - Screen Switch	4 7
Input - Screen Switch - Ok	4 7 1
Input - Sound Switch	4 8
Input - Sound Switch - Ok	4 8 1
General	5
General - Language	5 1
General - Language - English	5 1 1

Menu	Location
General - Language - German	5 1 2
General - Language - French	5 1 3
General - Language - Spanish	5 1 4
General - Language - Italian	5 1 5
General - Language - Swedish	5 1 6
General - Language - Finnish	5 1 7
General - Language - Portuguese	5 1 8
General - Language - Portuguese (Brazil)	5 1 9
General - Language - Polish	5 1 10
General - Language - Russian	5 1 11
General - Language - Turkish	5 1 12
General - Language - Ukrainian	5 1 13
General - Language - Chinese	5 1 14
General - Language - Traditional Chinese	5 1 15
General - Language - Japanese	5 1 16
General - Language - Korean	5 1 17
General - OLED Screen Move	5 2
General - OLED Screen Move - Off	5 2 1
General - OLED Screen Move - Mode 1	5 2 2
General - OLED Screen Move - Mode 2	5 2 3
General - OLED Screen Move - Mode 3	5 2 4
General - OLED Screen Move - Mode 4	5 2 5
General - OLED Screen Saver	5 3
General - OLED Screen Saver - On	5 3 1
General - OLED Screen Saver - Off	5 3 2
General - OLED Image Cleaning	5 4
General - OLED Image Cleaning - No	5 4 1
General - OLED Image Cleaning - Yes	5 4 2
General - Hexagon Lighting	5 5
General - Hexagon Lighting - Static 1	5 5 1

Menu	Location
General - Hexagon Lighting - Static 1	5 5 1 Color Chip
General - Hexagon Lighting - Static 2	5 5 2
General - Hexagon Lighting - Static 2	5 5 2 Color Chip
General - Hexagon Lighting - Static 3	5 5 3
General - Hexagon Lighting - Static 3	5 5 3 Color Chip
General - Hexagon Lighting - Static 4	5 5 4
General - Hexagon Lighting - Static 4	5 5 4 Color Chip
General - Hexagon Lighting - Cycling	5 5 5
General - Hexagon Lighting - Off	5 5 6
General - User-defined Key 1	5 6
General - User-defined Key 1 - Input	5 6 1
General - User-defined Key 1 - Game Mode	5 6 2
General - User-defined Key 1 - OLED Image Cleaning	5 6 3
General - User-defined Key 1 - PBP / PIP	6 4
General - User-defined Key 1 - DTS Headphone:X	5 6 5
General - User-defined Key 1 - Crosshair	5 6 6
General - User-defined Key 1 - Black Stabilizer	5 6 7
General - User-defined Key 1 - FPS Counter	5 6 8
General - User-defined Key 1 - Hexagon Lighting	5 6 9
General - User-defined Key 2	5 7
General - User-defined Key 2 - Input	5 7 1
General - User-defined Key 2 - Game Mode	5 7 2
General - User-defined Key 2 - OLED Image Cleaning	5 7 3
General - User-defined Key 2 - PBP / PIP	5 7 4
General - User-defined Key 2 - DTS Headphone:X	5 7 5
General - User-defined Key 2 - Crosshair	5 7 6
General - User-defined Key 2 - Black Stabilizer	5 7 7
General - User-defined Key 2 - FPS Counter	5 7 8
General - User-defined Key 2 - Hexagon Lighting	5 7 9
General - SMART ENERGY SAVING	5 8

Menu	Location
General - SMART ENERGY SAVING - High	5 8 1
General - SMART ENERGY SAVING - Low	5 8 2
General - SMART ENERGY SAVING - Off	5 8 3
General - Deep Sleep Mode	5 9
General - Deep Sleep Mode - On	5 9 1
General - Deep Sleep Mode - Off	5 9 2
General - Automatic Standby	5 10
General - Automatic Standby - 8H	5 10 1
General - Automatic Standby - 6H	5 10 2
General - Automatic Standby - 4H	5 10 3
General - Automatic Standby - Off	5 10 4
General - Input Compatibility Version	5 11
General - Input Compatibility Version - 2.1(PC) / 1.4(DSC)	5 11 1
General - Input Compatibility Version - 2.1(AV) / 1.4	5 11 2
General - Input Compatibility Version - 1.4 / 1.2	5 11 3
General - Buzzer	5 12
General - Buzzer - On	5 12 1
General - Buzzer - Off	5 12 2
General - OSD Lock	5 13
General - OSD Lock - On	5 13 1
General - OSD Lock - Off	5 13 2
General - Information	5 14
General - Open Source Software License	5 15
General - Open Source Software License	5 15 1
General - Reset to Initial Settings	5 16
General - Reset to Initial Settings - No	5 16 1
General - Reset to Initial Settings - Yes	5 16 2

LIMITED WARRANTY (USA)

THE PRODUCT'S FULL LIMITED WARRANTY TERMS AND CONDITIONS ARE AVAILABLE AT *https://www.lg.com/us* AND/OR YOUR WARRANTY.

ARBITRATION NOTICE: THIS LIMITED WARRANTY CONTAINS AN ARBITRATION PROVISION THAT REQUIRES YOU AND LG ELECTRONICS ("LG") TO RESOLVE DISPUTES BY BINDING ARBITRATION INSTEAD OF IN COURT, UNLESS YOU CHOOSE TO OPT OUT. IN ARBITRATION, CLASS ACTIONS AND JURY TRIALS ARE NOT PERMITTED. PLEASE SEE THE SECTION TITLED "PROCEDURE FOR RESOLVING DISPUTES" BELOW.

PROCEDURE FOR RESOLVING DISPUTES:

ALL DISPUTES BETWEEN YOU AND LG ARISING OUT OF OR RELATING IN ANY WAY TO THIS LIMITED WARRANTY OR THE PRODUCT SHALL BE RESOLVED EXCLUSIVELY THROUGH BINDING ARBITRATION, AND NOT IN A COURT OF GENERAL JURISDICTION. BINDING ARBITRATION MEANS THAT YOU AND LG ARE EACH WAIVING THE RIGHT TO A JURY TRIAL AND TO BRING OR PARTICIPATE IN A CLASS ACTION.

Definitions. For the purposes of this section, references to "LG" mean LG Electronics U.S.A., Inc., its parents, subsidiaries and affiliates, and each of their officers, directors, employees, agents, beneficiaries, predecessors in interest, successors, assigns and suppliers; references to "dispute" or "claim" shall include any dispute, claim or controversy of any kind whatsoever (whether based in contract, tort, statute, regulation, ordinance, fraud, misrepresentation or any other legal or equitable theory) arising out of or relating in any way to the sale, condition or performance of the product or this Limited Warranty.

Notice of Dispute. In the event you intend to commence an arbitration proceeding, you must first notify LG in writing at least 30 days in advance of initiating the arbitration by sending a letter to LG at LG Electronics, USA, Inc. Attn: Legal Department- Arbitration 111 Sylvan Avenue, Englewood Cliffs, NJ 07632. You and LG agree to engage in good faith discussions in an attempt to amicably resolve your claim. The notice must provide your name, address, and telephone number; identify the product that is the subject of the claim; and describe the nature of the claim and the relief being sought. If you and LG are unable to resolve the dispute within 30 days, either party may proceed to file a claim for arbitration.

Agreement to Binding Arbitration and Class Action Waiver. Upon failure to resolve the dispute during the 30 day period after sending written notice to LG, you and LG agree to resolve any claims between us only by binding arbitration on an individual basis, unless you opt out as provided below. Any dispute between you and LG shall not be combined or consolidated with a dispute involving any other person's or entity's product or claim. More specifically, without limitation of the foregoing, any dispute between you and LG shall not under any circumstances proceed as part of a class or representative action. Instead of arbitration, either party may bring an individual action in small claims court, but that small claims court action may not be brought on a class or representative basis.

Arbitration Rules and Procedures. To begin arbitration of a claim, either you or LG must make a written demand for arbitration. The arbitration will be administered by the American Arbitration Association ("AAA") and will be conducted before a single arbitrator under the AAA's Consumer Arbitration Rules that are in effect at the time the arbitration is initiated (referred to as the "AAA Rules") and under the procedures set forth in this section. The AAA Rules are available online at *www.adr.org/consumer*. Send a copy of your written demand for arbitration, as well as a copy of this provision, to the AAA in the manner described in the AAA Rules. You must also send a copy of your written demand to LG at LG Electronics, USA, Inc. Attn: Legal Department- Arbitration 111 Sylvan Avenue, Englewood Cliffs, NJ 07632. If there is a conflict between the AAA Rules and the rules set forth in this section, the rules set forth in this section will govern. This arbitration provision is governed by the Federal Arbitration Act. Judgment may be entered on the arbitrator's award in any court of competent jurisdiction. All issues are for the arbitrator to decide, except that issues relating to the scope and enforceability of the arbitration provision and to the arbitrability of the dispute are for the court to decide. The arbitrator is bound by the terms of this provision.

Governing Law. The law of the state of your residence shall govern this Limited Warranty and any disputes between us except to the extent that such law is preempted by or inconsistent with applicable federal law.

Fees/Costs. You do not need to pay any fee to begin an arbitration. Upon receipt of your written demand for arbitration, LG will promptly pay all arbitration filing fees to the AAA unless you seek more than $25,000 in damages, in which case the payment of these fees will be governed by the AAA Rules. Except as otherwise provided for herein, LG will pay all AAA filing, administration and arbitrator fees for any arbitration initiated in accordance with the AAA Rules and this arbitration provision. If you prevail in the arbitration, LG will pay your attorneys' fees and expenses as long as they are reasonable, by considering factors including, but not limited to, the purchase amount and claim amount. Notwithstanding the foregoing, if applicable law allows for an award of reasonable attorneys' fees and expenses, an arbitrator can award them to the same extent that a court would. If the arbitrator finds either the substance of your claim or the relief sought in the demand is frivolous or brought for an improper purpose (as measured by the standards set forth in Federal Rule of Civil Procedure 11(b)), then the payment of all arbitration fees will be governed by the AAA Rules. In such a situation, you agree to reimburse LG for all monies previously disbursed by it that are otherwise your obligation to pay under the AAA Rules. Except as otherwise provided for, LG waives any rights it may have to seek attorneys' fees and expenses from you if LG prevails in the arbitration.

Hearings and Location. If your claim is for $25,000 or less, you may choose to have the arbitration conducted solely on the basis of (1) documents submitted to the arbitrator, (2) through a telephonic hearing, or (3) by an in-person hearing as established by the AAA Rules. If your claim exceeds $25,000, the right to a hearing will be determined by the AAA Rules. Any in-person arbitration hearings will be held at a location within the federal judicial district in which you reside unless we both agree to another location or we agree to a telephonic arbitration.

Opt Out. You may opt out of this dispute resolution procedure. If you opt out, neither you nor LG can require the other to participate in an arbitration proceeding. To opt out, you must send notice to LG no later than 30 calendar days from the date of the first consumer purchaser's purchase of the product by either: (i) sending an e-mail to optout@lge.com, with the subject line: "Arbitration Opt Out" or (ii) calling 1- 800-980-2973. You must include in the opt out e-mail or provide by telephone: (a) your name and address; (b) the date on which the product was purchased; (c) the product model name or model number; and (d) the serial number (the serial number can be found (i) on the product; or (ii) online by accessing *https://www.lg.com/us/support* and clicking on "How do I find my model number?").

You may only opt out of the dispute resolution procedure in the manner described above (that is, by e-mail or telephone); no other form of notice will be effective to opt out of this dispute resolution procedure.

Opting out of this dispute resolution procedure will not affect the coverage of the Limited Warranty in any way, and you will continue to enjoy the full benefits of the Limited Warranty. If you keep this product and do not opt out, then you accept all terms and conditions of the arbitration provision described above.

LIMITED WARRANTY (CANADA)

THE PRODUCT'S FULL LIMITED WARRANTY TERMS AND CONDITIONS ARE AVAILABLE AT *https://www.lg.com/ca_en/* AND/OR YOUR WARRANTY.

ARBITRATION NOTICE: THIS LIMITED WARRANTY CONTAINS AN ARBITRATION PROVISION THAT REQUIRES YOU AND LG TO RESOLVE DISPUTES BY BINDING ARBITRATION INSTEAD OF IN COURT, UNLESS THE LAWS OF YOUR PROVINCE OR TERRITORY DO NOT PERMIT THAT, OR, IN OTHER JURISDICTIONS, IF YOU CHOOSE TO OPT OUT. FOR FURTHER CLARITY, THIS ARBITRATION PROVISION IS NOT APPLICABLE TO CONSUMERS RESIDING IN ONTARIO AND QUÉBEC. IN ARBITRATION, CLASS ACTIONS AND JURY TRIALS ARE NOT PERMITTED. PLEASE SEE THE SECTION TITLED "PROCEDURE FOR RESOLVING DISPUTES" BELOW.

- **DISCLAIMER:**
  IF YOU ARE A CONSUMER SUBJECT TO QUÉBEC AND ONTARIO'S CONSUMER PROTECTION ACT, THE EXCLUSION OF WARRANTIES CONTAINED IN THIS SECTION DO NOT EXCLUDE OR LIMIT THE RIGHTS AND REMEDIES THAT YOU MAY HAVE UNDER SUCH ACT, INCLUDING THE RIGHT TO MAKE A CLAIM UNDER ANY OF THE STATUTORY WARRANTIES PROVIDED THEREUNDER.

PROCEDURE FOR RESOLVING DISPUTES:

EXCEPT WHERE PROHIBITED AT LAW (INCLUDING WITH RESPECT TO QUÉBEC AND ONTARIO CONSUMERS), ALL DISPUTES BETWEEN YOU AND LG ARISING OUT OF OR RELATING IN ANY WAY TO THIS LIMITED WARRANTY OR THE PRODUCT SHALL BE RESOLVED EXCLUSIVELY THROUGH BINDING ARBITRATION, AND NOT IN A COURT OF GENERAL JURISDICTION. EXCEPT WHERE PROHIBITED AT LAW (INCLUDING WITH RESPECT TO QUÉBEC AND ONTARIO CONSUMERS), YOU AND LG BOTH IRREVOCABLY AGREE TO WAIVE THE RIGHT TO A JURY TRIAL AND TO BRING OR PARTICIPATE IN A CLASS ACTION.

Definitions. For the purposes of this section, references to "LG" mean LG Electronics Canada, Inc., its parents, subsidiaries and affiliates, and each of their officers, directors, employees, agents, beneficiaries, predecessors in interest, successors, assigns and suppliers; references to "dispute" or "claim" shall include any dispute, claim or controversy of any kind whatsoever (whether based in contract, tort, statute, regulation, ordinance, fraud, misrepresentation or any other legal or equitable theory) arising out of or relating in any way to the sale, condition or performance of the product or this Limited Warranty.

Notice of Dispute. In the event you intend to commence an arbitration proceeding, you must first notify LG in writing at least 30 days in advance of initiating the arbitration by sending a letter to LGECI Legal Team at 20 Norelco Drive, North York, Ontario, Canada M9L 2X6 (the "Notice of Dispute"). You and LG agree to engage in good faith discussions in an attempt to amicably resolve your claim. The notice must provide your name, address, and telephone number; identify the product that is the subject of the claim; and describe the nature of the claim and the relief being sought. If you and LG are unable to resolve the dispute within 30 days of LG's receipt of the Notice of Dispute, the dispute shall be resolved by binding arbitration in accordance with the procedure set out herein. You and LG both agree that, during the arbitration proceeding, the terms (including any amount) of any settlement offer made by either you or LG will not be disclosed to the arbitrator until the arbitrator determines the dispute.

Agreement to Binding Arbitration and Class Action Waiver. Upon failure to resolve the dispute during the 30 day period after LG's receipt of the Notice of Dispute, you and LG agree to resolve any claims between you and LG only by binding arbitration on an individual basis, unless you opt out as provided below, or you reside in a jurisdiction that prevents full application of this clause in the circumstances of the claims at issue (in which case if you are a consumer, this clause will only apply if you expressly agree to the arbitration). To the extent permitted by applicable law, any dispute between you and LG shall not be combined or consolidated with a dispute involving any other person's or entity's product or claim. More specifically, without limitation of the foregoing, except to the extent such a prohibition is not permitted at law, any dispute between you and LG shall not under any circumstances proceed as part of a class or representative action. Instead of arbitration, either party may bring an individual action in small claims court, but that small claims court action may not be brought on a class or representative basis except to the extent this prohibition is not permitted at law in your province or territory of jurisdiction as it relates to the claims at issue between you and LG. This does not apply to consumers in Ontario and Québec. In accordance with provincial legislation, the consumer and LG may agree to resolve the dispute using any procedure available, including commencing the action before the competent courts of those provinces.

Arbitration Rules and Procedures. To begin arbitration of a claim, either you or LG must make a written demand for arbitration. The arbitration will be private and confidential, and conducted on a simplified and expedited basis before a single arbitrator chosen by the parties under the provincial or territorial commercial arbitration law and rules of the province or territory of your residence. You must also send a copy of your written demand to LG at LG Electronics, Canada, Inc., Attn: Legal Department- Arbitration, 20 Norelco Drive, North York, Ontario M9L 2X6. This arbitration provision is governed by your applicable provincial or territorial commercial arbitration legislation. For consumers in Ontario and Québec, the applicable arbitration legislation only applies if consumers agree to submit the dispute to arbitration. Judgment may be entered on the arbitrator's award in any court of competent jurisdiction. All issues are for the arbitrator to decide, except that, issues relating to the scope and enforceability of the arbitration provision and to the arbitrability of the dispute are for the court to decide. The arbitrator is bound by the terms of this provision.

Governing Law. The law of the province or territory of your purchase shall govern this Limited Warranty and any disputes between you and LG except to the extent that such law is preempted by or inconsistent with applicable federal or provincial/territorial law. Should arbitration not be permitted for any claim, action, dispute or controversy between you and LG, you and LG attorn to the exclusive jurisdiction of the courts of the province or territory of your purchase for the resolution of the claim, action, dispute or controversy between you and LG.

Fees/Costs. You do not need to pay any fee to begin an arbitration. Upon receipt of your written demand for arbitration, LG will promptly pay all arbitration filing fees unless you seek more than $25,000 in damages, in which case the payment of these fees will be governed by the applicable arbitration rules. Except as otherwise provided for herein, LG will pay all filing, administration and arbitrator fees for any arbitration initiated in accordance with the applicable arbitration rules and this arbitration provision. If you prevail in the arbitration, LG will pay your attorneys' fees and expenses as long as they are reasonable, by considering factors including, but not limited to, the purchase amount and claim amount. Notwithstanding the foregoing, if applicable law allows for an award of reasonable attorneys' fees and expenses, an arbitrator can award them to the same extent that a court would. If the arbitrator finds either the substance of your claim or the relief sought in the demand is frivolous or brought for an improper purpose (as measured by the applicable laws), then the payment of all arbitration fees will be governed by the applicable arbitration rules. In such a situation, you agree to reimburse LG for all monies previously disbursed by it that are otherwise your obligation to pay under the applicable arbitration rules. Except as otherwise provided for, LG waives any rights it may have to seek attorneys' fees and expenses from you if LG prevails in the arbitration.

Hearings and Location. If your claim is for $25,000 or less, you may choose to have the arbitration conducted solely (1) on the basis of documents submitted to the arbitrator, (2) through a telephonic hearing, or (3) by an in-person hearing as established by the applicable arbitration rules. If your claim exceeds $25,000, the right to a hearing will be determined by the applicable arbitration rules. Any in-person arbitration hearings will be held at the nearest, most mutually-convenient arbitration location available within the province or territory in which you reside unless you and LG both agree to another location or agree to a telephonic arbitration.

Severability and Waiver. If any portion of this Limited Warranty (including these arbitration procedures) is unenforceable, the remaining provisions will continue in full force and effect to the maximum extent permitted by applicable law. Should LG fail to enforce strict performance of any provision of this Limited Warranty (including these arbitration procedures), it does not mean that LG intends to waive or has waived any provision or part of this Limited Warranty.

Opt Out. The arbitration provision requires you and LG to resolve disputes by binding arbitration instead of court, unless the laws of your province or territory do not permit that, or, in other jurisdictions, if you choose to opt out. The arbitration provision does not apply to consumers in Ontario and Québec.

For individuals that fall within the binding arbitration provisions, you may opt out of this dispute resolution procedure. If you opt out, neither you nor LG can require the other to participate in an arbitration proceeding. To opt out, you must send notice to LG no later than 30 calendar days from the date of the first consumer purchaser's purchase of the product by either (i) sending an e-mail to optout@lge.com, with the subject line: "Arbitration Opt Out;" or (ii) calling 1-800-980-2973. You must include in the opt out e-mail or provide by telephone: (a) your name and address; (b) the date on which the product was purchased; (c) the product model name or model number; and (d) the serial number (the serial number can be found (i) on the product; or (ii) online by accessing *https://www.lg.com/ca_en/findmodel_serial/*).

In the event that you "Opt Out", the law of the province or territory of your residence shall govern this Limited Warranty and any disputes between you and LG except to the extent that such law is preempted by or inconsistent with applicable federal or provincial/territorial law. Should arbitration not be permitted for any claim, action, dispute or controversy between you and LG, you and LG agree to attorn to the exclusive jurisdiction of the courts of the province or territory of your residence for the resolution of the claim, action, dispute or controversy between you and LG.

You may only opt out of the dispute resolution procedure in the manner described above (that is, by e-mail or telephone); no other form of notice will be effective to opt out of this dispute resolution procedure. Opting out of this dispute resolution procedure will not affect the coverage of the Limited Warranty in any way, and you will continue to enjoy the full benefits of the Limited Warranty. If you keep this product and do not opt out, then you accept all terms and conditions of the arbitration provision described above.

Conflict of Terms. In the event of a conflict or inconsistency between the terms of this Limited Warranty and the End User License Agreement ("EULA") in regards to dispute resolution, the terms of this Limited Warranty shall control and govern the rights and obligations of the parties and shall take precedence over the EULA.



The model and serial number of the product are located on the back and on one side of the product.
Record them below in case you ever need service.

Model

Serial No.

Supplier's Declaration of Conformity	
Trade Name	LG
Responsible Party	LG Electronics USA, Inc.
Address	111 Sylvan Avenue, North Building, Englewood Cliffs, NJ 07632
E-mail	lg.environmental@lge.com