Scan the QR code to see the manual.

OWNER'S MANUAL

# MICROWAVE OVEN

Before beginning installation, read these instructions carefully. This will simplify installation and ensure that the product is installed correctly and safely. Leave these instructions near the product after installation for future reference.

**ENGLISH**

MFL05801303
Rev.00_061725

www.lg.com

Copyright © 2025 LG Electronics. All Rights Reserved

# TABLE OF CONTENTS

This manual may contain images or content that may be different from the model you purchased.

This manual is subject to revision by the manufacturer.


## IMPORTANT SAFETY INSTRUCTIONS

READ CAREFULLY AND KEEP FOR FUTURE REFERENCE ..... 3
WARNING ..... 3
CAUTION ..... 8
CARING FOR THE ENVIRONMENT ..... 12
Declaration of Conformity ..... 12

## INSTALLATION

Product Overview ..... 14
Installation Requirements ..... 15

## OPERATION

Control Panel ..... 17
Before Use ..... 18
Quick Start ..... 19
Cooking Mode ..... 20
Utensils Guide ..... 29
Cooking Guide ..... 30

## SMART FUNCTIONS

LG ThinQ Application ..... 32
Smart Diagnosis ..... 32

## TROUBLESHOOTING

FAQs ..... 33
Before Calling for Service ..... 33

# IMPORTANT SAFETY INSTRUCTIONS

## READ CAREFULLY AND KEEP FOR FUTURE REFERENCE

The following safety guidelines are intended to prevent unforeseen risks or damage from unsafe or incorrect operation of the appliance. The guidelines are separated into '**WARNING**' and '**CAUTION**' as described below.

### Safety Messages

| | |
|---|---|
| ⚠ | This symbol is displayed to indicate matters and operations that can cause risk.<br>Read the part with this symbol carefully and follow the instructions in order to avoid risk. |
| ⚠ | **WARNING**<br>This indicates that the failure to follow the instructions can cause serious injury or death. |
| ⚠ | **CAUTION**<br>This indicates that the failure to follow the instructions can cause the minor injury or damage to the appliance. |
| ♨ | This symbol is displayed to alert that hot surface. Do not touch surfaces during use in order to prevent burn hazard. |

## WARNING

### ⚠ WARNING

- To reduce the risk of explosion, fire, death, electric shock, injury or scalding to persons when using this product, follow basic precautions, including the following:

### Technical Safety

- This appliance can be used by children aged from 8 years and above and persons with reduced physical, sensory or mental capabilities or lack of experience and knowledge if they have been given supervision

or instruction concerning use of the appliance in a safe way and understand the hazards involved. Children shall not play with the appliance. Cleaning and user maintenance shall not be made by children without supervision.

- This appliance is not intended for use by persons (including children) with reduced physical, sensory or mental capabilities, or lack of experience and knowledge, unless they have been given supervision or instruction concerning use of the appliance by a person responsible for their safety. Children should be supervised to ensure that they do not play with the appliance.
- To reduce the risk of burns, electric shock, fire, injury to persons or exposure to excessive microwave energy when using the microwave oven, read all instructions before using the appliance.
- During use the appliance becomes hot. Care should be taken to avoid touching heating elements inside the oven. Children less than 8 years of age shall be kept away unless continuously supervised.
- Do not attempt to tamper with, or make any adjustments or repairs to the door , door seals, control panel, safety interlock switches or any other part of the oven which would involve the removal of any cover protecting against exposure to microwave energy.
- Only qualified service person from LG Electronics service centre should disassemble, repair, or modify the appliance.
- It is hazardous for anyone other than a competent person to carry out any service or repair operation that involves the removal of a cover which gives protection against exposure to microwave energy.
- Unlike other appliances, the microwave oven is a high-voltage and a high electrical-current piece of equipment. Improper use or repair could result in harmful exposure to excessive microwave energy or in electric shock.
- If the door or door seals are damaged, the oven must not be operated until it has been repaired by a competent person.
- Do not use your microwave oven to cook eggs in the shell. Pressure can build up inside the shell, causing it to burst.
- Liquids and other foods must not be heated in sealed containers since they are liable to explode. Remove the plastic wrapping from

food before cooking or defrosting. Note though that in some cases food should be covered with plastic film, for heating or cooking.

- Do not use harsh abrasive cleaners or sharp metal scrapers to clean the oven door glass since they can scratch the surface, which may result in shattering of the glass.
- The microwave oven must not be placed in a cabinet. The microwave oven is intended to be used free-standing.
- Keep the appliance and its cord out of reach of children less than 8 years.
- The appliance is not intended to be operated by means of an external timer or separate remote-control system.
- This appliance should not be used for commercial catering purposes. This appliance is intended to be used in household and similar applications such as:
  - Staff kitchen areas in shops, offices and other working environments;
  - Farm house;
  - By clients in hotels, motels and other residential environments;
  - Bed and breakfast type environments.
- Do not install this appliance inside mobile vehicles (camping cars).
- When heating food in plastic or paper containers, keep an eye on the oven due to the possibility of ignition.
- The contents of feeding bottles and baby food jars shall be stirred or shaken and the temperature checked before consumption, in order to avoid burns.
- Only use utensils that are suitable for use in microwave ovens. They may heat-up and char.
  - Remove metal twist ties before using the appliance.
  - Do not use wooden containers and ceramic containers that have metallic (e.g. gold or silver) inlays.
  - Metallic containers for food and beverages are not allowed during microwave cooking. Metal objects in particular may arc in the oven, which can cause serious damage.

- The microwave oven is intended for heating food and beverages. Drying of food or clothing and heating of warming pads, slippers, sponges, damp cloth and similar may lead to risk of injury, ignition or fire.
- If smoke is observed (or emitted), switch off or unplug the appliance and keep the door closed in order to stifle any flame.
- Only use the temperature probe recommended for this oven.
  - You can not ascertain that the temperature is accurate with an unsuitable temperature probe.
  - This model does not provide a temperature probe.
- When heating liquids, e.g. soups, sauces and beverages in your microwave oven,
  - Avoid using straight sided containers with narrow necks.
  - Do not overheat.
  - Stir the liquid before placing the container in the oven and again halfway through the heating time.
  - Be careful when handling the container.

    Microwave heating of beverages can result in delayed eruptive boiling, therefore care must be taken when handing the container.
  - After heating, let it stand in the appliance for a short time; stir or shake it again carefully and check the temperature of it before consuming to avoid burns (especially, contents of feeding bottles and baby food jars).
- The oven should be cleaned regularly and any food deposits removed. Failure to maintain the oven in a clean condition could lead to deterioration of the surface that could adversely affect the life of the appliance and possibly result in a hazardous situation.
- Cleaning and user maintenance shall not be made by children unless they are aged from 8 years and above and supervised.
- The appliance shall not be cleaned with a steam cleaner.
- Steam cleaner is not to be used.
- During use the appliance becomes hot. Care should be taken to avoid touching heating elements inside the oven.

- Only allow children to use the oven without supervision when adequate instructions have been given so that the child is able to use the oven in a safe way and understands the hazards of improper use.

## Installation

- Ensure that the outlet socket is properly grounded, and that the earth pin on the power cord is not damaged or removed from the power plug. For more details on grounding, inquire at an LG Electronics customer information centre.
- This appliance must be earthed. The wires in the mains lead are coloured in accordance with the following codes:
  - BLUE: Neutral
  - BROWN: Live
  - GREEN and YELLOW: Earth
- As the colours of the wires in the mains lead of this appliance may not correspond with the coloured markings identifying the terminals in your plug proceed as follows:
  - The wire which is coloured BLUE must be connected to the terminal which is marked with the letter N or coloured BLACK.
  - The wire which is coloured BROWN must be connected to the terminal which is marked with the letter L or Coloured RED.
  - The wire which is coloured GREEN & YELLOW or GREEN must be connected to the terminal which is marked with the letter G or earth symbol.

⏚ Earth symbol

- This appliance incorporates an earth connection for functional purposes.
- If the supply cord is damaged, it must be replaced by the manufacturer, its service agent of similarly qualified persons in order to avoid a hazard. Improper use may cause serious electric damage.
- The appliance is supplied from a cord extension set or an electrical portable outlet device, the cord extension set on electrical portable

outlet device must be positioned so that it is not subject to splashing or ingress of moisture.

- If the power cord is damaged or the hole of the outlet socket is loose, do not use the power cord and contact an authorized service centre.

## Operation

- Children should not allow to play with accessories or hang down from the door or any part of the appliance.
- When the appliance is operated in the combination mode, children should only use the appliance under adult supervision due to the temperatures generated.
- Never operate the appliance when it is empty. Food or water should always be in the appliance during operation to absorb the microwave energy.
- Do not operate your appliance if it is damaged. It is particularly important that the oven door closes properly and that there is no damage to the: (1) door (bent), (2) hinges and latches (broken or loosened), (3) door seals and sealing surfaces. It could result in harmful exposure to excessive microwave energy.
- Do not use the appliance for the purpose of dehumidification. (ex. Operating the microwave oven with wet newspapers, clothes, toys, electric devices, pet or child etc.) It can be the cause of serious damage to safety such as a fire, a burn or a sudden death due to an electric shock.
- Be certain to use proper accessories on each operation mode. Improper use could result in damage to your appliance and accessories, or could make spark and a fire.

## CAUTION

### ⚠ CAUTION

- To reduce the risk of injury to persons, malfunction, or damage to the product or property when using the appliance, follow basic safety precautions, including the following:

## Installation

- Install the appliance according to the installation requirements that are in this manual.
- Allow at least 8 cm from the front of the oven door to avoid accidental tipping of the appliance.
- The turntable must always be in place when you operate the appliance.
- Do not block an exhaust outlet that is located on the top, bottom or side of the appliance.
- Do not place any object (such as kitchen towels, napkins, etc.) between the appliance front face and the door.
- In order to avoid a hazard due to inadvertent resetting of the thermal cut-out, this appliance must not be supplied through an external switching device, such as a timer, or connected to a circuit that is regularly switched on and off by the utility.

## Operation

- Do not touch the appliance (including the oven door, outer cabinet, rear cabinet, oven cavity, accessories and dishes) during grill mode, convection mode and auto cook operations. The temperature of accessible surfaces may be high when the appliance is operating. There is the danger of a burn unless wearing thick culinary gloves.
- Do not place an object(a book, a box, water bottle, vase etc.) on the appliance. The appliance may overheat or catch fire or the object may fall, causing injury to persons.
- Do not operate the appliance with the door open. It could result in harmful exposure to excessive microwave energy.
- Set the cooking times correctly. The small amounts of food require shorter cooking or heating time. Over cooking may result in the food catching on fire and subsequent damage to your appliance.
- Do not use recycled paper products. They may contain impurities which may cause sparks or fires when used in cooking.
- Do not cook food wrapped in paper towels or newspaper, unless your cook book contains instructions for the food you are cooking.

- Do not use newspaper in place of paper towels for cooking.
- Do not use the appliance to dry newspapers or clothes. They may catch fire.
- Do not cook eggs in their shell. Eggs in their shell and whole hard-boiled eggs should not be heated in microwave ovens since they may explode, even after microwave heating has ended. Pressure will build up inside the egg which will burst.
- Do not attempt deep fat frying in your appliance. This could result in a sudden boil over of the hot liquid.
- Pierce the skin of potatoes, apples or any such fruit or vegetables before cooking. They could burst.
- If smoke is observed (or emitted), switch off or unplug the appliance and keep the door closed in order to stifle any flame.
- Follow exact directions given by each manufacturer for their popcorn product.
  - Never use a brown paper bag for popping corn.
  - Never attempt to pop leftover kernels.
  - Do not leave the appliance unattended while the corn is being popped.
  - If corn fails to pop after the suggested times, discontinue cooking.
  - Overcooking could result in the corn catching a fire.
- The power connection may be achieved by having the plug accessible or by incorporating a switch in the fixed wiring in accordance with the wiring rules. Using improper plug or switch can cause an electric shock or a fire.
- All air vents should be kept clear during cooking. If air vents are covered during appliance operation the appliance may overheat.
- When removing dishes from the microwave oven, be careful not to tip over or move the turntable.

## Maintenance

- If it is necessary to take precautions during user maintenance, appropriate details shall be given.

- Do not rinse containers, tray and rack by placing them in water immediately after cooking.
- Unplug the power plug and allow it to cool before cleaning.
- Always use gloves when removing food and accessories after cooking as the oven and accessories will be very hot.
- Allow the turntable to cool before removing it from the appliance.
- Do not allow food or cleaner residue to accumulate on sealing surfaces of the appliance.
- Keep the inside and outside of the appliance clean.

**Cleaning**

Keep the oven clean inside and outside. Take special care to keep the inner door panel and the front frame free of food or grease build-up. Clean your oven weekly or more often, if needed.

- Abrasive cleansers, steel wool pads, gritty wash cloths, some paper towels, etc., can damage the control panel and the interior and exterior of the oven.

**Cleaning the Interior**

Use a damp cloth to clean the surfaces of the door and wipe out crumbs between the door and the frame. Remove greasy spatters with a soapy cloth then rinse and dry.

- Wipe spatters immediately with a wet paper towel, especially after cooking chicken or bacon.
- If steam accumulates inside or outside of the oven door, wipe the panels with a soft cloth.

**Cleaning the Exterior**

Clean the outside of the oven with soap and water. Rinse with clean water and dry with a soft cloth or paper towel.

- Do not allow the water to seep into the ventilation openings to prevent damage to the operating parts inside the oven.
- The door and door seals should be kept clean. Use only warm, soapy water, rinse then dry thoroughly.
- Frequently wipe metal parts with a damp cloth.

**Cleaning the Control Panel**

Open the door to prevent the oven from accidentally starting. Wipe with a damp cloth followed immediately by a dry cloth. Press **STOP** or **STOP/Clear** after cleaning.

**Cleaning the Accessories**

Wash the glass tray and rotating ring in mild, sudsy water. For heavily soiled areas, use a mild cleanser and scouring sponge. Dry completely before use.

- The glass tray and rotating ring are dishwasher safe.

# CARING FOR THE ENVIRONMENT

## Disposal of Your Old Appliance

- This crossed-out wheeled bin symbol indicates that waste electrical and electronic products (WEEE) should be disposed of separately from the municipal waste stream.
- Old electrical products can contain hazardous substances so correct disposal of your old appliance will help prevent potential negative consequences for the environment and human health. Your old appliance may contain reusable parts that could be used to repair other products, and other valuable materials that can be recycled to conserve limited resources.
- You can take your appliance either to the shop where you purchased the product, or contact your local government waste office for details of your nearest authorised WEEE collection point. For the most up to date information for your country please see www.lg.com/global/recycling.

## Declaration of Conformity

### Declaration of Conformity for UK

UK
CA

Hereby, LG Electronics declares that the radio equipment type Microwave oven is in compliance with the relevant statutory requirements. The full text of the UK declaration of conformity is available at the following internet address :
http://www.lg.com/global/support/cedoc/cedoc#

# INSTALLATION

## Product Overview

The appearance or components of the appliance may differ from model to model.

### Front View

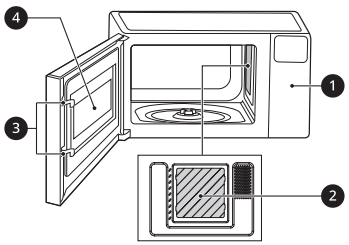


❶ Control Panel

❷ Mica Sheet

❸ Safety Door Lock System

❹ Window

**⚠ WARNING**

- Do not operate the oven when it is empty or without the glass tray. It is best to leave a glass of water in the oven when not in use. The water will safely absorb all microwave energy, if the oven is accidentally started.

**⚠ CAUTION**

- To avoid risk of personal injury or property damage, do not use stoneware, metal cookware, or metal rimmed cookware in the oven.

**NOTE**

- Do not remove the mica sheet from the inside cavity of the oven. It is there to protect the microwave components from food spatters.

### Accessories

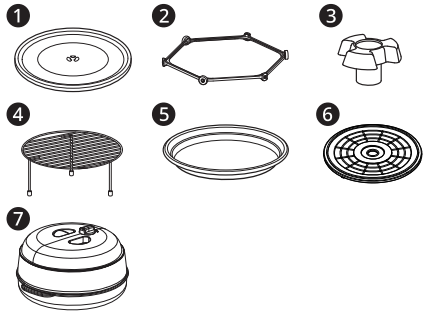


❶ Glass Tray

❷ Rotating Ring

❸ Shaft

❹ Rack

❺ Tray*1

❻ Defrost Tray*1

❼ Steam Bowl*1

*1 This accessory is only available on some models.

**⚠ CAUTION**

- Do not use the microwave oven without the glass tray and rotating ring.

### Specifications

Power supply and power consumption may vary depending on the model purchased. Refer to the labels for details.

**MH653****, MH656**** Model**

- **Microwave Output**: Max. 1000 W*1
- **Frequency**: 2450 MHz*2
- **Dimensions (W x H x D)**: 476 mm x 272 mm x 388 mm
- **Power Supply**: 230 V~ 50 Hz

- **Power Consumption**: Microwave 1150 W, Grill 900 W, Grill Combination 1450 W
- **Standby and Sleep Mode Power Consumption**: 0.5 W
- **Information Mode Power Consumption**: 0.8 W

**MH723****, MH726**** Model**

- **Microwave Output**: Max. 1200 W*1
- **Frequency**: 2450 MHz*2
- **Dimensions (W x H x D)**
  - MH723**** : 544 mm x 307 mm x 456 mm
  - MH726**** : 544 mm x 308 mm x 458 mm
- **Power Supply**: 230 V~ 50 Hz
- **Power Consumption**: Microwave 1350 W, Grill 1 000 W, Grill Combination 1500 W
- **Standby and Sleep Mode Power Consumption**: 0.5 W
- **Information Mode Power Consumption**: 0.8 W

*1 IEC 60705 RATING STANDARD. Specifications are subject to change without prior notice.

*2 Microwave Frequency: 2450 MHz +/- 50 MHz (Group 2 / Class B)

Group 2 equipment: group 2 contains all ISM RF equipment in which radio-frequency energy in the frequency range 9 kHz to 400GHz is intentionally generated and used or only used, in the form of electromagnetic radiation, inductive and /or capacitive coupling, for the treatment of material or inspection/analysis purposes.

Class B equipment is equipment suitable for use in domestic dwellings and domestic dwellings directly connected to a low voltage power supply network which supplies buildings used for domestic purposes.

## NOTE

- When operating at 100% and 80% power levels for prolonged periods, the output power will be reduced gradually to help prevent the unit from electrically overheating.

# Installation Requirements

## Installation Location

**1** Place the microwave oven on a flat surface with more than 85 cm height.

- The front of the oven should be at least 8 cm from the edge of the surface to prevent tipping.

**2** Allow at least 20 cm from the top, 20 cm from the sides, and 20 cm back of the oven for proper ventilation.

- Free airflow around the oven is important.
- An exhaust outlet is located on bottom or side of the oven. If you use the microwave oven in an enclosed space or cupboard, the air flow for cooling the product could be worse. It may result in lower performance and reduced service life.

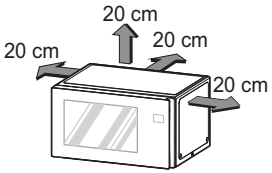


**3** Place the rotating ring inside the oven and place the glass tray on top.

**4** Insert the power plug into an outlet.

- Do not block the outlet to prevent damage the oven.
- Make sure the microwave oven is the only appliance connected to the socket.
- If your oven does not operate properly, unplug it from the electrical socket and then plug it back in.

## NOTE

- Do not place oven above a gas or electric range.

**NOTE**

- The setting of the cooking time should be shorter than common microwave ovens (700 W, 800 W) due to the relatively high output power of the product.

## Radio Frequency Interference

- When operating the microwave oven, If you use a product such as radio, TV, wireless LAN, Bluetooth, medical equipment, wireless equipment etc.
- Using the same frequency as the microwave oven, the product may receive interference from these products. This interference does not indicate a problem of the microwave or the product and is not a malfunction. Therefore, it is safe to use. However, medical equipment may receive interference as well, so use caution when using medical equipment near the product.

# OPERATION

## Control Panel

### Control Panel Features

The actual control panel and display may differ from model to model.

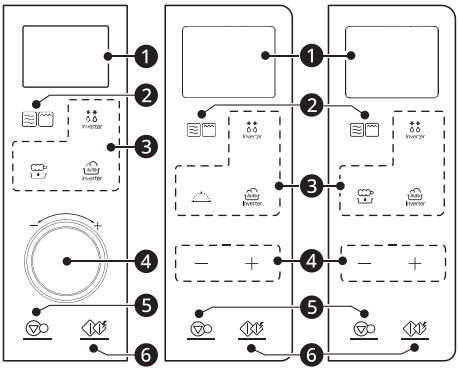

❶ **Display**

Shows the time of day, cooking time settings, and selected cooking functions.

❷ **Cook Mode**

Select a cooking mode for the microwave oven, grill, and grill combination mode.

❸ **Auto Cook Mode**

Press the buttons to select preprogrammed cook and defrost settings for popular food items.

| | |
|---|---|
| | **Inverter Defrost** |
| | **Healthy Fry**[*1] |
| | **Steam Cook**[*1] |
| | **Inverter Cook** |

*1 This feature is only available on some models.

❹ **More/Less**

Set cooking time, power level, quantity, or weight.

❺ **STOP/Clear**

Stop the oven or clear all entries.

- If you press and hold this button for 3 seconds to lock the control panel.

❻ **START/Enter**

Press this button to start the oven, enter amounts, or cook at 100% cook power for 30 seconds.

- If you press this button during cooking to increase cook time by 30 seconds. (Up to 99 minutes and 59 seconds)

### Display Icon

An icon displays when a function is selected or an weight / a power level / a temperature is selected by using **More/Less**.

| Icon | Indication |
|---|---|
| | Microwave |
| | Grill |
| | Grill Combination |
| | Inverter Cook |
| | Inverter Defrost |
| | Start Cooking |
| + | Use More or Less |
| W | Select a Power Levels |
| kg | Select a Weight |

### NOTE

- A beep sounds each time you press a key. A melody signals the end of a timer or a cooking cycle.

## NOTE

- This oven has a built-in safety interlocks to prevent exposure to excessive microwave energy. The oven will automatically turn off any cooking when the door is opened.

# Before Use

## Microwave Power Levels

This microwave oven is equipped with 5 power levels to give you maximum flexibility and control over cooking. See the table for suggested power levels for various foods.

- When operating at 100% and 80% power levels for prolonged periods, the output power will be reduced gradually to help prevent the unit from electrically overheating.

| Power Level | Use |
|---|---|
| **High 1200 W**[*1]**/ 1000 W**[*2] **(100%)** | • Boiling water.<br>• Browning ground beef<br>• Making candy.<br>• Cooking poultry pieces, fish, vegetables, and tender cuts of meat. |
| **1000** W[*1]**/ 800 W**[*2] **(80%)** | • Reheating rice, pasta & vegetables.<br>• Reheating prepared foods quickly.<br>• Reheating sandwiches. |
| **700 W** [*1]**/ 600 W**[*2] | • Cooking egg, milk and cheese dishes.<br>• Cooking cakes and breads.<br>• Cooking veal.<br>• Cooking whole fish.<br>• Cooking puddings and custard.<br>• Melting chocolate. |
| **400 W** | • Thawing meat, poultry and seafood.<br>• Cooking less tender cuts of meat. |
| **200 W** | • Taking chill out of fruit.<br>• Softening butter and cream cheese.<br>• Keeping casseroles and main dishes warm. |

*1 For MH723****, MH726**** model

*2 For MH653****, MH656**** model

## Setting the Clock

When the oven is plugged in for the first time or when power resumes after a power interruption, the clock defaults to the 12-hour clock mode and 12H appears in the display. You can set the time of day or switch to the 24-hour clock mode.

1 Press **START/Enter** to confirm the 12H clock display.
   - To switch to the 24-hour clock mode, use **More/Less**.

2 Select a desired hour by using **More/Less**, and press **START/Enter**.

3 Select a desired minutes by using **More/Less**, and press **START/Enter**.

## NOTE

- To reset the clock mode, you must unplug and reconnect the power cord.
- If you do not want the time of day to appear in the display, press **STOP/Clear**, after plugging in the oven.
- When the oven is not in use, the display turns off to save energy, unless the time of day is set to show in the display.

- After 5 minutes, the appliance automatically switches to standby mode.

## Child Lock

Use this safety feature to lock the control panel and prevent the oven from being turned on when cleaning the oven or prevent children from unsupervised use of the oven.

**Setting Child Lock to ON**

1 Press **STOP/Clear**.

2 Press and hold **STOP/Clear** until a **Loc** appears in the display (approximately 3 seconds).

**Cancelling Child Lock**
Press **STOP/Clear** and hold until a **Loc** disappears in the display (approximately 3 seconds).

### NOTE

- If set, the time of day reappears in the display after 1 second.
- If the oven is locked, a **Loc** appears in the display when any key is pressed.
- Unlock the oven to resume normal use.

# Quick Start

## Quick Start Feature

This feature allows you to set 30-second intervals of High power cooking with each press of the **START/Enter** button.

**Cooking for 2 Minutes on High Power**

1 Press **STOP/Clear**.

2 Press **START/Enter** four times.
- The oven starts cooking and the time counts down in the display.

### NOTE

- The oven will immediately start cooking for 30 seconds on high power.
- Press **START/Enter** repeatedly to extend the cook time by 30 seconds every time the button is pressed.
- The cook time can be extended to 99 minutes and 59 seconds.

## Manual Cooking

When not using the auto cooking functions, the cooking time and power level are set manually.

1 Press **STOP/Clear**.

2 Press **Cook Mode** until a High power level appears in the display.

3 Select a desired power level by using **More/Less**, and press **START/Enter**.

4 Select a desired time by using **More/Less**, and press **START/Enter**.
- When cooking is complete, a chime sounds and **End** appears in the display window. **End** remains in the display and the chime repeats every minute until the door is opened, or any button is pressed.

### NOTE

- If a power level is not selected, the oven defaults to High power.

## Grill Cooking

This feature allow you to brown and crisp food quickly without preheating.

1 Press **STOP/Clear**.

2 Press **Cook Mode** until **GrlL** appears in the display, and press **START/Enter**.

3 Select a desired time by using **More/Less**, and press **START/Enter**.

## ⚠ CAUTION

- Always use gloves when removing food and accessories after cooking as the oven and accessories will be very hot.

## NOTE

- The rack can be used in grill and grill combination cooking. Place the rack on the glass tray.

- Do not use the defrost tray.

## Grill Combination Cooking

This feature allow you to combine microwave cooking with the grill to cook quickly.

1 Press **STOP/Clear**.

2 Press **Cook Mode** until **Co-1** appears in the display.

3 Select a desired microwave power level code by using **More/Less**, and press **START/Enter**.
   - Microwave power level code
     - **Co-1**: 200 W, **Co-2**: 300 W, **Co-3**: 400 W (MH653****, MH656**** model)
     - **Co-1**: 220 W, **Co-2**: 330 W, **Co-3**: 440 W (MH723****, MH726**** model)

4 Select a desired time by using **More/Less**, and press **START/Enter**.
   - During cooking you can adjust the cooking time by using **More/Less**.

## ⚠ CAUTION

- Always use gloves when removing food and accessories after cooking as the oven and accessories will be very hot.
- The rack can be used in grill and grill combination cooking. Place the rack on the glass tray.

- Do not use the defrost tray.

# Cooking Mode

This feature has preprogrammed settings to automatically cook certain foods.

## Roasting Mode

This feature allow you to automatically roast food.

1 Press **STOP/Clear**.

2 Press **Inverter Cook** until **1** appears in the display.

3 Select a desired menu code by using **More/Less**, and press **START/Enter**.

4 Select a desired weight by using **More/Less**, and press **START/Enter**.
- When the beep, drain juices and turn food over. Press **START/Enter** to resume the cook cycle.

## NOTE

- When cooking a roast, use a rack if you have it. Place the rack on the glass tray.

## Roasting Menu

Refer to the below to set the desired code and weight.

**1-1 Jacket Potatoes (0.2 - 1.0 kg)**

- Initial Temperature: Room
- Utensil: Rack
- 1 potatoes: 180 - 220 g
- Wash potatoes and dry with a paper towel.
- Pierce each potato 8 times with a fork.
- Standing time: 3 minutes

**1-2 Roast Beef (0.5 - 1.5 kg)**

- Initial Temperature: Refrigerated
- Utensil: Heat-proof glass dish
- Brush beef with melted butter or oil and season as desired.
- Standing time: 10 minutes

**1-3 Roast Chicken (0.8 - 1.8 kg)**

- Initial Temperature: Refrigerated
- Utensil: Heat-proof glass dish
- Brush whole chicken with melted butter or oil and season as desired.
- Standing time: 10 minutes

**1-4 Roast Lamb (0.5 - 1.5 kg)**

- Initial Temperature: Refrigerated
- Utensil: Heat-proof glass dish
- Brush lamb with melted butter or oil and season as desired.
- Standing time: 10 minutes

**1-5 Roast Pork (0.5 - 1.5 kg)**

- Initial Temperature: Refrigerated
- Utensil: Heat-proof glass dish
- Brush pork with melted butter or oil and season as desired.
- Standing time: 10 minutes

**1-6 Roast Vegetables (0.2 - 0.3 kg)**
**Ingredients**

- Onions, cut into wedges
- Eggplants and zucchinis, cut into 1 - 2 cm thickness
- Sweet peppers, cut in half lengthwise and discard seeds
- Whole cherry tomatoes
- Mushrooms, cut in half

**Instructions**

- Initial Temperature: Room
- Utensil: Heat-proof glass dish on the rack
- Brush vegetables with melted butter or oil and season as desired.

## Popular Cooking Mode

This feature cooks for popular food items.

1 Press **STOP/Clear**.

2 Press **Inverter Cook** until **2** appears in the display, and press **START/Enter**.

3 Select a desired menu code by using **More/Less**, and press **START/Enter**.

4 Select a desired weight by using **More/Less**, and press **START/Enter**.

## Popular Menu

Refer to the below to set the desired code and weight.

**2-1 Chicken Legs with Prunes (1.2 kg)**
**Ingredients**

- 1 sliced onion, carrot
- 500 g chicken legs
- 1 cup chicken stock
- 15 halved and pitted prunes
- Salt and pepper to taste

**Instructions**

- Initial Temperature: Room
- Utensil: Microwave-safe bowl
- Add all ingredients in a deep and large bowl and mix well.
- Cover with vented plastic wrap.
- Stir at least twice during cooking.

**2-2 Julienne in Bun (0.8 kg)**
**Ingredients**

- 4 - 5 buns
- 50 g grated cheese
- **Stuffing**

  Ingredients

  - 2 tbsps butter
  - 200 g chopped chicken breasts
  - 100 g chopped mushrooms
  - 1 chopped onion
  - 1 cup cream
  - Salt and pepper to taste

  Instructions

  - Cook chicken breasts, mushrooms and onion in a frying pan with butter.
  - Add cream and simmer on low heat until cream has thickened.
  - Season with salt and pepper.

**Instructions**

- Initial Temperature: Room
- Utensil: Heat-proof glass dish on the rack
- Cut off the tops of buns and remove the pulp, taking care not to pierce crust.
- Fill each bun with stuffing and place stuffed buns on a glass dish.
- Add cheese on top of each bun.

**2-3 Pork Fillet in Bacon with Eggplant (1.2 kg)**
**Ingredients**

- 400 g pork fillet
- 8 strips bacon
- 0.5 eggplant
- 2 tbsps olive oil
- Salt and pepper to taste

**Instructions**

- Initial Temperature: Room
- Utensil: Heat-proof glass dish on the rack
- Cut pork fillet into 8 pieces (about 50 g), add salt and pepper. Wrap pork fillet with bacon.
- Slice eggplant and put in the olive oil.
- Place wrapped pork fillets and sliced eggplants on a glass dish.

**2-4 Potato Gratin (1.5 kg)**
**Ingredients**

- 1 kg potatoes
- 1 clove garlic
- 20 g butter
- 300 g cream
- 100 g grated cheese
- Nutmeg, salt and pepper to taste

**Instructions**

- Initial Temperature: Room
- Utensil: Baking dish (20 x 20 cm)
- Peel and wash potatoes then cut into 5 mm slices. Rub inside of dish with garlic clove and butter.
- Place half of potatoes in a baking dish and season. Fill with remaining potatoes and season then pour cream and cheese over the top.

**2-5 Ratatouille (1.5 kg)**
**Ingredients**

- 1 onion, eggplant, zucchini, coloured sweet pepper. Cut into chunks.
- 3 chopped tomatoes

- 1 tbsp tomato paste, sugar
- 1 chopped tbsps fresh greens
- 2 tbsps vinegar
- 2 crushed garlic cloves
- Salt and pepper to taste

**Instructions**

- Initial Temperature: Room
- Utensil: Microwave-safe bowl
- Add all ingredients in a deep and large bowl and mix well.
- Cover with vented plastic wrap.

**2-6 Rice / Pasta (0.1 - 0.3 kg)**
**Ingredients for Rice**

- Rice / Butter, melted / Onion, grated / Chicken stock or water
  - 100 g / 30 g / 50 g / 250 ml
  - 200 g / 40 g / 75 g / 500 ml
  - 300 g / 50 g / 100 g / 750 ml
- Salt to taste

**Instructions for Rice**

- Add rice, melted butter and onion in a deep and large bowl (3 L) and mix well.
- Pour boiling chicken stock or water and add salt.
- Cover with vented plastic wrap.
- Standing time: 5 - 10 minutes

**Ingredients for Pasta**

- Pasta / Water
  - 100 g / 400 ml
  - 200 g / 800 ml
  - 300 g / 1 000 ml

**Instructions for Pasta**

- Place pasta and boiling water with salt in a deep and large bowl (3 L).
- Cover with vented plastic wrap.
- After cooking, rinse pasta with cold water.

Initial Temperature: Room

Utensil: Microwave-safe bowl

**2-7 Stuffed Tomatoes (1.0 kg)**
**Ingredients**

- 4 medium tomatoes
- Salt and pepper to taste
- Beef mixture
  - 300 g ground beef
  - 0.5 cup bread crumbs
  - 2 garlic cloves, crushed
  - 1 tbsp: Dijon mustard, dried greens, and parmesan cheese

**Instructions**

- Initial Temperature: Room
- Utensil: Microwave-safe dish
- Cut tops off tomatoes to form hats and remove seeds. Then sprinkle each tomato with salt and pepper.
- Stuff tomatoes with beef mixture and replace hat.
- Place stuffed tomatoes and cover with plastic wrap.

**2-8 Stuffed Zucchini (1.2 kg)**
**Ingredients**

- 4 round zucchinis(200 g/each)
- 500 g ground beef
- 2 tbsps olive oil
- Salt and pepper to taste Instructions

**Instructions**

- Initial Temperature: Room
- Utensil: Microwave-safe dish
- Cut tops off zucchinis to form hats and seed them. Then sprinkle each zucchini with salt and pepper. Stuff zucchinis with ground beef and replace hats.
- Place food on a heat-proof glass dish and drizzle with olive oil.

## Softening and Melting Mode

The oven uses low power to soften foods (cream cheese, ice cream) and melt foods (butter, chocolate).

1 Press **STOP/Clear**.

2 Press **Inverter Cook** until **3** appears in the display.

3 Select a desired menu code by using **More/Less**, and press **START/Enter**.

4 Select a desired weight by using **More/Less**, and press **START/Enter**.
- After cooking, stir to complete melting.

## Softening and Melting Menu

Refer to the below to set the desired code and weight.

**3-1 Soften Cream Cheese (0.1 - 0.3 kg)**

- Initial Temperature: Refrigerated
- Utensil: Microwave-safe dish
- Unwrap before use.

**3-2 Soften Ice Cream (2 or 4 cups)**

- Initial Temperature: Frozen
- Remove lid and cover.

**3-3 Melt Butter (1 - 3 pieces, 100 - 150 g / each)**

- Initial Temperature: Refrigerated
- Utensil: Microwave-safe bowl

**3-4 Melt Chocolate (0.1 - 0.3 kg)**

- Initial Temperature: Room
- Utensil: Microwave-safe bowl
- Chocolate chips or squares of baking chocolate may be used.
- Unwrap before use.

# Defrosting and Cooking Mode

This feature allow to defrost and cook for popular food items.

1 Press **STOP/Clear**.

2 Press **Inverter Cook** until **4** appears in the display.

3 Select a desired menu code by using **More/Less**, and press **START/Enter**.

4 Select a desired weight by using **More/Less**, and press **START/Enter**.
- When the beep, turn food over and press **START/Enter** to resume the roast cycle.

## Defrosting and Cooking Menu

Refer to the below to set the desired code and weight.

**4-1 Baguette/Croissant (0.1 - 0.3 kg)**

- Initial Temperature: Frozen
- Utensil: Heat-proof glass dish
- Remove frozen baguette or croissant from wrap.

**4-2 Cheese Sticks (0.2-0.4 kg)**

- Initial Temperature: Frozen
- Utensil: Rack
- Remove cheese sticks from all packaging.

**4-3 Chicken Nuggets (0.2 - 0.3 kg)**

- Initial Temperature: Frozen
- Utensil: Rack
- Remove chicken nuggets from all packaging.

**4-4 Frozen Lasagna (0.3 kg)**

- Initial Temperature: Frozen
- Remove lasagna from box packages and remove cover.

**4-5 Frozen Pizza (Thick) (0.5 kg)**

- Initial Temperature: Frozen
- Utensil: Rack
- Remove thick-crust pizza from all packaging.

**4-6 Frozen Pizza (Thin) (0.2 - 0.4 kg)**

- Initial Temperature: Frozen
- Utensil: Rack

- Remove thick-crust pizza from all packaging.

**4-7 Salmon Fillets (0.2 - 0.6 kg, 180 - 220 g, 2.5 cm thickness / each)**

- Initial Temperature: Frozen
- Utensil: Rack on a drip dish
- Brush frozen salmon with melted butter or oil and season as desired.

**4-8 Shrimps (0.2 - 0.4 kg)**

- Initial Temperature: Frozen
- Utensil: Rack on a drip dish
- Brush frozen shrimp with melted butter or oil and season as desired.

## Proof and Keep Warm Mode

This feature allows you to make yogurt, or keep temperature that has just been cooked.

1 Press **STOP/Clear**.

2 Press **Inverter Cook** until a desired mode code appears in the display.

3 Press **START/Enter**.
- **Yogurt**: **5h00** will appears in the display.
- **Keep Warm**: **1h30** will appears in the display.

### NOTE

**Proof**

- Use only the pasteurized whole milk and natural plain yogurt.
- Do not use following types of milk and yogurt:
  - 2 %, 1 % or fat-free milk, high calcium milk, soy milk, leftover milk, expired milk.
  - Leftover yogurt, expired yogurt.
- Thoroughly wash all utensils with hot water and dry before proofing yogurt.
- Do not shake or mix yogurt during proofing as this will affect the firmness of the yogurt.
- If the amount of ingredients are greater than suggested, increase the proofing time.

**Keep Warm**

- Crisp foods (pastry, pies, turnovers, etc) should be uncovered during keep warm.
- Moist foods should be covered with plastic wrap or microwave-safe lid.
- The amount of keep warm food is suitable for 1 - 3 servings. It should also be noted that moist food will become dryer the longer it is kept warm.
- Plastic wrap should not touch the food during heating.

### Proof and Keep Warm Menu

Refer to the below to set the desired code and weight limit.

**5 Yogurt (0.6 kg)**

- Initial Temperature: Lukewarm
- Utensil: Microwave-safe bowl
- **Ingredients**
  - 500 ml, Pasteurized whole milk
  - 100 g, Natural plain yogurt
- Heat milk about 1:30 - 2:30 on high microwave power until 40 - 50 °C temperature.
- Add yogurt and stir.
- Cover plastic wrap and cook.
- Standing time: 5 hours in the refrigerator.
- After cooking, stir in jam, sugar or fruits to taste.

**6 Keep Warm**

- Initial Temperature: -

## Steam Cooking Mode

This feature allows you steamed cook.
This feature is only available on some models.

1 Press **STOP/Clear**.

2 Press **Steam Cook** until until 1 appears in the display.

3 Select a desired menu code by using **More/Less**, and press **START/Enter**.

4 Select a desired weight by using **More/Less**, and press **START/Enter**.
- When the beep, turn food over and press **START/Enter** to resume the cook cycle.

## ⚠ CAUTION

- Always use oven gloves when removing a steamer from the oven. It is very hot.
- Do not put a hot steamer on a glass table or a place that may melt after cooking. Always make sure a pad or tray is used.
- When you use the steamer, pour at least 300 ml water before use. If the amount of water is less than 300 ml, it may cause incomplete cooking, or may cause a fire or fatal damage to the product.
- Be careful when you move the steamer with water.
- Do not use the steamer with a product from a different model. It may cause fire or fatal damage to the product.
- When you use the steamer, the steam cover and tray should be set perfectly right. Eggs or chestnuts will explode if the steam cover and tray are not set.

## Steam Cook Menu

**1 Broccoli/Cauliflower (0.2 - 0.4 kg)**

- Initial Temperature: Room
- Utensil: Steamer cover, steamer plate, and tray with water.
- Wash vegetables and cut into similar sized pieces. (2.5 cm)
- Pour 300 ml tap water into the steam water bowl. Place the steam plate on the steam water bowl.
- Place prepared food on the steam plate in a single layer. Cover with steam cover and place the steam bowl in the oven.

**2 Carrot (0.2 - 0.4 kg)**

- Initial Temperature: Room
- Utensil: Steamer cover, steamer plate, and tray with water.
- Wash vegetables and cut into similar sized pieces. (5 mm)
- Pour 300 ml tap water into the steam water bowl. Place the steam plate on the steam water bowl.
- Place prepared food on the steam plate in a single layer. Cover with steam cover and place the steam bowl in the oven.

**3 Chicken Breasts (0.2 - 0.6 kg)**

- Initial Temperature: Refrigerated
- Utensil: Steamer cover, steamer plate, and tray with water.
- Wash vegetables and cut into similar sized pieces. (2.5 cm)
- Pour 300 ml tap water into the steam water bowl. Place the steam plate on the steam water bowl.
- Place prepared food on the steam plate in a single layer. Cover with steam cover and place the steam bowl in the oven.

**4 Fish Fillets (0.2 - 0.6 kg)**

- Initial Temperature: Refrigerated
- Utensil: Steamer cover, steamer plate, and tray with water.
- Wash vegetables and cut into similar sized pieces. (2.5 cm)
- Pour 300 ml tap water into the steam water bowl. Place the steam plate on the steam water bowl.
- Place prepared food on the steam plate in a single layer. Cover with steam cover and place the steam bowl in the oven.

**5 Green Beans (0.1 - 0.3 kg)**

- Initial Temperature: Room
- Utensil: Steamer cover, steamer plate, and tray with water.
- Wash vegetables and cut into similar sized pieces. (2.5 cm)
- Pour 300 ml tap water into the steam water bowl. Place the steam plate on the steam water bowl.

- Place prepared food on the steam plate in a single layer. Cover with steam cover and place the steam bowl in the oven.

**6 Mussels (0.2 - 0.6 kg)**

- Initial Temperature: Refrigerated
- Utensil: Steamer cover, steamer plate, and tray with water.
- Wash mussels and remove any broken shell or dead mussels.
- Pour 300 ml tap water into the steam water bowl. Place the steam plate on the steam water bowl.
- Place prepared food on the steam plate in a single layer. Cover with steam cover and place the steam bowl in the oven.

**7 Prawns (0.2 - 0.5 kg)**

- Initial Temperature: Refrigerated
- Utensil: Steamer cover, steamer plate, and tray with water.
- Pour 300 ml tap water into the steam water bowl. Place the steam plate on the steam water bowl.
- Place prepared food on the steam plate in a single layer (Under 20 cm thickness). Cover with steam cover and place the steam bowl in the oven.

**8 Tomatoes (0.2 - 0.6 kg)**

- Initial Temperature: Room
- Utensil: Steamer cover, steamer plate, and tray with water.
- Wash tomatoes. If the tomato is too big, cut it in half.
- Pour 300 ml tap water into the steam water bowl. Place the steam plate on the steam water bowl.
- Place prepared food on the steam plate in a single layer. Cover with steam cover and place the steam bowl in the oven.

## Healthy Fry Mode

- This feature is only available on some models.

1. Press **STOP/Clear**.
2. Press **Healthy Fry**.
3. Select a desired menu code by using **More/Less**, and press **START/Enter**.
4. Select a desired weight by using **More/Less**, and press **START/Enter**.

## Healthy Fry Menu

**1 Chicken Schnitzel (0.2 - 0.6 kg)**
**Ingredients**

- Chicken breasts of 150 - 200 g each
- 1 cup flour
- 2 eggs, lightly beaten
- 1 cup finely ground breadcrumbs
- Salt and pepper to taste

**Instructions**

- Initial Temperature: Refrigerated
- Utensil: Tray on the high rack
- Season chicken breasts with salt and pepper or as desired, coat in flour and brush with beaten eggs.
- Coat with finely ground breadcrumbs and brush chicken schnitzel with oil.

**2 Chicken Wings (0.2 - 0.6 kg)**

- Initial Temperature: Refrigerated
- Utensil: Tray on the high rack
- Brush lamb with melted butter or oil and season as desired.

**3 Cutlet (0.2 - 0.4 kg)**
**Ingredients**

- 500 g lean grouond lamb or beef
- 500 g small potatoes, cooked and mashed
- 3 eggs, lightly beaten
- 2 onions, finely chopped
- 2 tbsps chopped parsley

- 1 cup finely ground breadcrumbs
- Salt and pepper to taste

**Instructions**

- Initial Temperature: Refrigerated
- Utensil: Tray on the high rack
- Mix meat, potatoes, eggs, onions and parsley.
- With meat mixture, make balls about 4 - 5 cm diameter.
- Coat with finely ground breadcrumbs and shape balls into ovals about 1 cm thick each.
- Brush cutlet with oil.

**4 Fish Schnitzel (MH653****/MH656****: 0.2 - 0.5 kg, MH723****/MH726****: 0.2 - 0.6 kg )**
**Ingredients**

- Fish filles of 150 - 200 g each
- 1 cup flour, finely ground breadcrumbs
- 2 eggs, lightly beaten
- Salt and pepper to taste

**Instructions**

- Initial Temperature: Refrigerated
- Utensil: Tray on the high rack
- Season fish fillets with salt and pepper or as desired, coat in flour and brush with beaten eggs.
- Coat with finely ground breadcrumbs and brush fish with oil.

**5 French Fries (0.1 - 0.3 kg)**

- Initial Temperature: Frozen
- Utensil: Tray on the high rack
- Spread frozen potato products out on the tray on the high rack.

**6 Hamburgers (0.2 - 0.4 kg)**

- Initial Temperature: Refrigerated
- Utensil: Tray on the high rack
- Use hamburgers of 100 g and 1 cm thick each.
- Brush hamburgers with oil.

**7 Sausages (0.2 - 0.6 kg)**

- Initial Temperature: Refrigerated
- Utensil: Tray on the high rack
- Remove all packaging and slit on the surface.

**8 Wedge Potatoes (0.2 - 0.4 kg)**

- Initial Temperature: Room
- Utensil: Tray on the high rack
- Remove all packaging and slit on the surface.

## Defrosting Mode

The oven has 4 preset defrost cycles. The defrost function provides the defrosting method for frozen foods. The defrost table shows the suggested defrost cycle for various foods. The defrost function conveniently chimes during the cycle to remind you to check, turn over, separate, or rearrange the food.

1. Press **STOP/Clear**.
2. Press **Inverter Defrost** until a desired menu code appears in the display, and press **START/Enter**.
3. Select a desired weight by using **More/Less**, and press **START/Enter**.
   - The countdown appears in the display.
4. At the beep, open the door and remove any portions that have thawed and turn the food over.
5. Press **START/Enter** to resume the defrost cycle.

### NOTE

- Remove fish, shellfish, meat, and poultry from its original wrapping paper or plastic package. Otherwise, the wrap will hold steam and juice close to the foods, which can cause the outer surface of the foods to cook.
- Place foods in a shallow container or on a microwave roasting rack to catch drippings.

- Food should still be somewhat icy in the centre when removed from the oven.
- The length of defrosting time varies according to how solidly the food is frozen.
- The shape of the package affects how quickly food will defrost. Shallow packages will defrost more quickly than a deep block.
- Depending on the shape of the food can be defrosted more or less.
- Use the defrost tray*1.

*1 This accessory is only available on some models

## Inverter Defrost Menu

Refer to the below to set the desired code and weight.

**dEF1 Meat (0.1 - 4.0 kg)**

- Beef: Ground beef, round steak, stew cubes, tenderloin steak, pot roast, rib roast, rump roast, chuck roast, hamburger patties
- Lamb: Chops, rolled roast
- Pork: Chops, hot dogs, spareribs, country-style ribs, rolled roast, sausage
- Veal: Cutlets (0.5 kg, 20 mm thick)
- Standing time: 5 - 15 minutes.

**dEF2 Poultry (0.1 - 4.0 kg)**

- Poultry: Whole, cut-up, breast (boneless)
- Cornish Hens: Whole
- Turkey: Breast
- Standing time: 30 - 60 minutes.

**dEF3 Fish (0.1 - 4.0 kg)**

- Fish: Fillets, whole steaks
- Shellfish: Crab meat, lobster tails, shrimp, scallops
- Standing time: 5 - 10 minutes.

**dEF4 Bread (0.1 - 0.5 kg)**

- Sliced bread, buns, baguettes, etc.
- Separate slices and place between paper towels or on flat plate.
- Standing time: 1 - 2 minutes.

# Utensils Guide

## Microwave-Safe Utensils

- **Ovenproof Glass**: Glassware that is heat-resistant is microwave-safe. This would include all brands of oven tempered glass utensils. However, do not use delicate glassware, such as tumblers or wine glasses, as these might shatter as the food warms.
- **Pottery Stoneware Ceramic**: Use bowls, cups, serving plates, pottery, stoneware, ceramic, and platters without metallic rim. Many containers made of these materials are microwave-safe, but test them before use.
- **Plastic**
  - **Plastic Storage Containers**: These can be used to hold foods that are to be quickly reheated. However, they should not be used to hold foods that will need considerable time in the oven as hot foods will eventually warp or melt plastic containers.
  - **Plastic Cooking Bags**: Provided they are specially made for cooking, cooking bags are microwave safe. Remember to make a slit in the bag so that steam can escape. Never use ordinary plastic bags for cooking in the microwave oven, as they will melt and rupture.
  - **Plastic Microwave Utensils**: A variety of shapes and sizes of microwave utensils are available. You may be able to use items you already have on hand rather than investing in new kitchen equipment.
- **Paper**: Use paper towels, waxed paper, paper napkins, and paper plates with no metallic rim or design. Paper plates and containers are convenient and safe to use in the microwave oven, provided that the cooking time is short and foods to be cooked are low in fat and moisture. Paper towels are also very useful for wrapping foods and for lining baking trays in which greasy foods such as bacon are cooked. In general, avoid coloured paper products as the color may run. Some recycled paper products may contain

impurities which could cause arcing or fires when used in the microwave.

- **Tableware**: Many containers made of pottery, stoneware and ceramic are also microwave-safe. If in doubt consult the manufacturer's literature or perform the microwave test. Do not put plates with painted decoration in the oven, as the paint may contain metal and cause arcing.

## Microwave-Unsafe Utensils

- **Metal Containers** and **Metal Decoration**
  - Never use metal or metal-rimmed utensils in the microwave oven.
  - Microwaves cannot penetrate metal. They will bounce off any metal object in the oven and cause arcing, an alarming phenomenon that resembles lightning.
  - Metal shields the food from microwave energy and produces uneven cooking. Also avoid metal skewers, thermometers, foil trays, metal-rimmed or metal-banded dinnerware, casserole dishes, etc. The metal rim interferes with normal cooking and may damage the oven.

## Testing Utensils before Use

Most heat resistant and non-metallic utensils is safe for use in your oven. However, some utensils may contain materials that are not suitable for microwave use. Follow the steps below to find out if utensils can be used in the microwave.

1. Place the container in question and a glass measuring cup filled with water next to each other inside the oven.

2. Heat the container and glass measuring cup for 1 minute at HIGH power.
   - If the water heats up but the container remains cool to the press, the container is microwave-safe.
   - If the temperature of the water does not change but the container becomes warm, it is not safe for use in the microwave oven.

**⚠ CAUTION**

- Some items with high lead or iron content are not suitable for microwave cooking.
- Utensils should be checked to ensure that it is suitable for use in the microwave.
- Always be careful when taking utensils out of the oven. Some dishes absorb heat from the cooked food and may be hot.

# Cooking Guide

## Cooking Tips

Carefully monitor the food in the microwave oven when it is cooked. Directions given in recipes to elevate, stir, etc., are the minimum steps recommended. If the food seems to be cooked unevenly, simply make the necessary adjustments to correct the problem.

- **Covering**: Cover the plate with a lid, parchment paper (not waxed paper) or cling plastic wrap for use in the microwave oven. A cover traps heat and steam, which help to cook the food more quickly.
- **Stirring**: Stir from the outside towards the center, as food at the outside of the dish heats more quickly.
- **Standing Time**: Standing time allows foods to finish cooking and also helps flavors blend and develop. Foods are often allowed to stand for 3 to 10 minutes after being removed from the oven.
- **Cooking Time**: Set the cooking time according to the temperature of the ingredients. Ice-cold ingredients take considerably longer to cook than room temperature ingredients.
- **Sprinkling**: Low-moisture foods such as roasts and vegetables should be sprinkled with water before cooking or covered to retain moisture.
- **Arranging**: The upper portion of thick foods will be cooked more quickly than the lower portion. Turn food over several times during cooking.
- **Piercing**: Pierce foods that are enclosed in a shell, skin or membrane before cooking to prevent them from bursting.

- Such foods include yolks and whites of eggs, clams, oysters, potatoes, and other whole vegetables and fruits.

- **Shape of Food**: Microwaves penetrate only about 2 cm into food. Only the outer edge of food is cooked by microwave energy; the rest is cooked as the heat moves inward.
  - Place the thickest portions of foods like meat, poultry or fish toward the outside of the utensils to help them cook more evenly.
  - If possible, shape foods into thin rounds or rings.
- **Density**: Light, porous food such as cakes and breads are cooked more quickly than heavy, dense foods such as roasts and casseroles.
- **Bones and Fat**: Bones conduct heat and fat cooks more quickly than meat. Take care with bony or fatty cuts of meat.
- **Quantity**: The more food you place in the oven, the longer the required cooking time.
- **Shielding**: Cover the corners of square dishes with strips of aluminum foil to prevent overcooking. Do not use too much foil, and make sure the foil is secured to the dish. If the foil gets too close to the oven walls during cooking, it can cause arcing.

# SMART FUNCTIONS

## LG ThinQ Application

This feature is only available on models with the or icon.

The **LG ThinQ** application allows you to communicate with the appliance using a smartphone.

### LG ThinQ Application Features

Communicate with the appliance from a smartphone using the convenient smart features.

#### Smart Diagnosis

If you experience a problem while using the appliance, this smart diagnosis feature will help you diagnose the problem.

**NOTE**

- The application is subject to change for appliance improvement purposes without notice to users.
- Functions may vary by model.

### Installing the LG ThinQ Application

Search for the **LG ThinQ** application from the Google Play Store or Apple App Store on a smart phone.

- Follow instructions to download and install the application.
- Run the **LG ThinQ** application and follow the instructions in the application to register the appliance.

## Smart Diagnosis

This feature is only available on models with the or icon.

Use this function if you need an accurate diagnosis by our customer information centre when the appliance malfunctions or fails.

**NOTE**

- For reasons not attributable to LGE's negligence, the service may not operate due to external factors such as, but not limited to, Wi-Fi unavailability, Wi-Fi disconnection, local app store policy, or app unavailability.
- The feature may be subject to change without prior notice and may have a different form depending on where you are located.

### Using Audible Diagnosis to Diagnose Issues

1) Hold the mouthpiece of your phone over the **Smart Diagnosis** logo. Do not touch any other buttons.

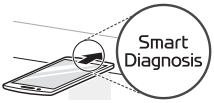


2) Press and hold the **STOP/Clear** button for 8 seconds until **5** appears in the display.
3) After you hear three beeps, release the **STOP/Clear** button.
4) Keep the phone in place until the tone transmission has finished. The display will count down the time. Once the countdown is over and the tones have stopped, the diagnosis will be displayed in the application.

**NOTE**

- For best results, do not move the phone while the tones are being transmitted.

# TROUBLESHOOTING

## FAQs

### Frequently Asked Questions

**Q**: **What's wrong when the oven light will not glow?**

A: There may be several reasons why the oven light will not glow. Either the light bulb has blown or the electric circuit has failed.

**Q: Does microwave energy pass through the viewing screen in the door?**

A: No. The holes, or ports, are made to allow light to pass; they do not let microwave energy through.

**Q: Why does the beep tone sound when a button on the control panel is touched?**

A: The beep tone sounds to assure that the setting is being properly entered.

**Q: Will the microwave function be damaged if it operates empty?**

A: Yes. Never run it empty.

**Q: Why do eggs sometimes pop?**

A: When baking, frying, or poaching eggs, the yolk may pop due to steam build up inside the yolk membrane. To prevent this, simply pierce the yolk before cooking. Never microwave eggs in the shell.

**Q: Why is standing time recommended after microwave cooking is over?**

A: After microwave cooking is finished, food keeps on cooking during standing time. This standing time finishes cooking evenly throughout the food. the amount of standing time depends on the density of the food.

**Q: Why doesn't my oven always cook as fast as the cooking guide says?**

A:

- Check your cooking guide again to make sure you have followed directions correctly, and to see what might cause variations in cooking time.
- Cooking guide times and heat settings are suggestions, chosen to help prevent overcooking, the most common problem in getting used to this oven.
- Variations in the size, shape, weight and dimensions of the food require longer cooking time.
- Use your own judgment along with the cooking guide suggestions to test food conditions, just as you would do with a conventional cooker.

**Q: Why does the word 'cool' or remaining cooking time appear in the display with fan noise after microwave cooking is over?**

A: After cooking is complete, the fan may operate to cool the oven. The display will show Cool. If you open the door or press once **STOP** or **STOP/Clear** before the cooking time is complete, the remaining cooking time will show on the display. This is not a malfunction.

## Before Calling for Service

If following symptoms appear while using the microwave oven, check it one more time. It may not be a failure.

## Operation

| Symptoms | Possible Cause & Solution |
|---|---|
| **Microwave oven does not start** | **Power cord is unplugged, door is open. Or, cooking time is not set.**<br>• Plug in power cord.<br>• Close oven door.<br>• Set cooking time. |
| | **A fuse in your home may be blown or the circuit breaker tripped. Or the appliance is connected to a GFCI (Ground Fault Circuit Interrupter) outlet, and the outlet's circuit breaker has tripped.**<br>• Check the main electrical box and replace the fuse or reset the circuit breaker.<br>Do not increase fuse capacity. If the problem is a circuit overload, have it corrected by a qualified electrician.<br>• Reset the circuit breaker on the GFCI. If the problem persists, contact an electrician. |
| **Arcing or Sparking** | **Utensils is not microwave safe. Or, operated the oven when it is empty.**<br>• Use microwave-safe utensils. When in doubt, test utensils before use.<br>• Do not operate oven while it is empty. |
| **Incorrect Time of Day** | **Power is interruption.**<br>• Reset the time. See Setting the Clock section to reset time of day. |
| **Unevenly Cooked Foods** | **Utensils is not microwave safe. Or, cooking settings was wrong.**<br>• Test utensils to make sure it is microwave safe.<br>• Do not cook without the glass tray.<br>• Turn or stir food while cooking.<br>• Defrost food completely before cooking.<br>• Use correct cook time and power level. |
| **Overcooked Foods** | **Cooking settings and methods are wrong.**<br>• Change cook time or power level. |
| **Undercooked Foods** | **Utensils is not microwave safe. Or, cooking settings was wrong.**<br>• Test that utensils is microwave safe.<br>• Defrost food completely before cooking.<br>• Change cook time or power level.<br>• Make sure that ventilation ports are not blocked. |
| **Improper Defrosting** | **Utensils is not microwave safe. Or, cooking settings was wrong.**<br>• Test that utensils is microwave safe.<br>• Change defrost time or weight.<br>• Turn or stir food during defrost cycle. |

## Memo

LG