OWNER'S MANUAL

LG LED Signage

(LED SCREEN)

Please read the safety information carefully before using this product.
After reading this manual, keep it in an easily accessible location for future reference.

LSAA012-MX5	LSAA012-MX6	LSAA012-NX5	LSAA012-NX6
LSAA012-QX5	LSAA012-QX6	LSAA012-UX5	LSAA012-UX6
LSAA012-SX5	LSAA012-SX6	LSAA012-TX5	LSAA012-TX6

www.lg.com

Copyright © 2022 LG Electronics Inc. All Rights Reserved.

TABLE OF CONTENTS

SAFETY PRECAUTIONS 3

- Precautions for the AC Cable and Power 4
- Precautions for Moving the Product 6
- Precautions for Installing the Product..... 7
- Precautions for Cleaning the Product 9
- Precautions for Using the Product..... 10
- Product Disposal 12

ASSEMBLING AND PREPARING 13

- Essential Accessories..... 13
- Optional Accessories..... 14
- Handling for Protecting LED Package Screen 15
- Remove Protective Bracket..... 17
- Installation Precautions Guide..... 19
- Installation Location..... 21
- Terminal..... 23

CONNECTING LAN (LSAA012-MX5, LSAA012-QX5, LSAA012-MX6, LSAA012-QX6, LSAA012-NX5, LSAA012-UX5, LSAA012-NX6, LSAA012-UX6) 24

CONNECTING AC (LSAA012-MX5, LSAA012-MX6, LSAA012-NX5, LSAA012-NX6) 25

TROUBLESHOOTING..... 27

PRODUCT SPECIFICATIONS... 29

SAFETY PRECAUTIONS

The safety precautions are intended to prevent unexpected danger or harm by helping the user to use the product safely and for its intended purpose.

WARNING

If you ignore the warning message, you may be seriously injured or there is a possibility of accident or death.

CAUTION

If you ignore the caution message, you may be slightly injured or the product may be damaged.

WARNING

Indoor Use Only.

Precautions for the AC Cable and Power

WARNING

- Before using an AC cable, make sure it conforms to the national standards.
- Operate the display only from a power source(i.e. voltage) indicated in the product specification.
  - Otherwise the product can be damaged, fire can occur or you may be electrocuted. If you are not sure what type of power supply you have, consult a certified installation company.
- Be sure to connect the AC cable to a grounded power disconnecting device.
  - If you do not you may be electrocuted or injured or the product can be damaged.
- Insert the AC cable securely so that it does not come loose.
  - Poor connection may cause a fire or electric shock.
- In the presence of thunder and lightning, never touch the power cord and signal cable because it can be very dangerous.
  - It can cause electric shock.
- Be careful not to place heavy objects (electronic appliances, clothes, etc.) on or step on the AC cable. In addition, do not bend or pull the AC cable with excessive force.
  - Damaged power cords may cause a fire or electric shock.
- Do not connect the AC cable to a power disconnecting device if it has been damaged by a sharp object.
  - You may be electrocuted.
- Do not insert a conductor (such as a metal chopstick) into the power disconnecting device while the AC cable is connected on the other side of the same power disconnecting device. In addition, do not touch the AC cable directly after removing it from the power disconnecting device.
  - You may be electrocuted.

- If water or any foreign substance enters the product, disconnect the AC cable immediately and contact the service centre.
  - Otherwise, this may cause a fire or electric shock due to damage to the product.
- Keep the AC cable away from heating devices.
  - The cord coating may melt and cause fire or electric shock.
- Never disassemble, repair, or modify the AC cable.
  - This may cause a fire or electric shock.
- As long as this unit is connected to the AC wall outlet, it is not disconnected from the AC power source even if the unit is turned off.
- For the power consumption to be zero, the AC cable must be disconnected.

⚠ CAUTION

- If there is dust on the AC cable or the power disconnecting device, wipe them clean.
  - Overheating due to layers of dust may cause a fire or electric shock.
- If there is moisture on the AC cable or the power disconnecting device, wipe them clean. In addition, do not touch them if your hands are wet.
  - This may cause an electric shock.
- Do not turn the product on or off by connecting or disconnecting the AC cable. In other words, do not use the AC cable as a switch.
  - This may cause an electric shock or product malfunction.
- Do not disconnect the AC cable while using the product.
  - Electrical shock can damage the product.

Precautions for Moving the Product

WARNING

- Contact the service centre before moving the product.
  - It may cause electric shock and damage the product.
- Make sure the product is turned off, unplugged, and all cables have been removed before the product is moved.
  - You may be electrocuted or the product can be damaged.
- When moving the product, do not shock or cause an impact on the front panel.
  - You may be electrocuted or the product can be damaged.
- Use the correct number of people according to the weight of the product. (Under 25 kg per person use lifting equipment when exceeding 100 kg)
  - If use the damaged product again, contact the service centre because it can cause electric shock or fire.
- Do not hold it upside down while holding only the stand. (It is for stand supported models only.)
  - This may cause stand warping, panel damage and other types of product damage.

CAUTION

- Do not dispose of the product-packing box. Use it when moving by putting the product in the box to carry it.

Precautions for Installing the Product

WARNING

- Contact the service centre before installing the product.
  - It can cause electric shock and damage the product.
- Do not drop an object on or impact on the product. Keep out of reach of children and do not place toys or objects near the product to prevent throwing things on the product screen.
  - It can cause injury to human, problem to product and damage the display.
- Do not put heavy objects on, or hang from, the product.
  - If the product collapses or is dropped, you may be injured.
- Do not touch the surface of the product if it overheats.
  - It can cause injury to human.
- Install the product firmly fixed on a floor, wall, etc. to prepare against external impact such as wind and earthquake.
  - You must refer to the manual provided.
- Prevent Children from climbing or hanging on the product.
  - If the product collapses or is dropped, you may be injured.
- Do not install it where there are heating devices such as electrical heaters or lighting equipment.
  - Fire, electrical shock, malfunction may occur.
- Do not install this product by yourself as you may injure yourself or cause damage to the product. Please contact service engineer authorised by service centre.
- Do not install this product on a wall if it could be exposed to oil or oil mist.
  - This may damage the product and cause it to fall.
- Do not leave the AC cable, signal cables, etc. in one's walking path.
  - This could cause a trip or fall, which could cause an electrical shock, fire, product breakdown, or injury.
- Do not let the product drop when connecting it to an external device connected with a short cable.
  - This may cause injury and damage to the product.
- If you dropped the product or the case is broken, turn off the product and unplug the power cord and contact the service centre.
  - If you continue to use without taking proper measures, electrical shock or fire can occur.
- Install the product in a dry place where it is not near dust and water. Avoid high temperatures and humidity.
  - This may cause electrical shock, fire or product damage.
- Safely install the product in a place that can hold the weight of the product.
  - A lack of strength may cause the product to fall.
- Take a comfortable and natural position to relax the muscles when working with a product.
- A readily accessible disconnect device shall be incorporated external to the equipment. The maximum rating of an overcurrent protective device to be provided external to the equipment may be one of the protective device ratings available in the country of installation.

⚠ CAUTION

- Install the product where no Electromagnetic Interference occurs.
- If you install the product in a place that does not meet the recommended conditions, this may cause serious damage to the product's picture quality, life cycle, and appearance. Please check with service engineer before installing. Please do not install the product in places such as where there is an abundance of fine dust or oil mist, chemical substances are used, exposed to direct sunlight, the temperature is very high or low, the humidity is very high.
- Make sure the product is well ventilated by Installing at a distance (30 mm or more) from the wall.
  - If you install the product too close to the wall, it may be deformed or fire can break out due to internal heat buildup.
- When the AC cable is connected, make sure that the vents are not blocked by tablecloths, curtains, or other objects (such as plastic).
  - The product can be deformed or fire can break out due to overheating inside the product.
- Do not install the product in an area with poor ventilation (e.g. on a bookshelf, in a closet) or outside and avoid placing on cushions or carpets.
  - The product could catch fire due to overheating inside the product.
- Install the product on a flat and stable place that is large enough to support the product.
  - If the product is dropped, you may be injured or the product may be broken.
- When installing the product on a shelf or cabinet, make sure that the bottom end of the product is not protruding forward.
  - The product may fall due to unbalanced centre of gravity, which may cause personal injury or damage to the product. Be sure to use cabinets or shelves that fit your product.

Precautions for Cleaning the Product

WARNING

- Keep the product clean at all times.
  - If you don't clean the unit for a long time and it becomes covered in dust, it can cause fire or product damage.
- When you need to clean the inside of the product, you must contact the service centre.
  - Otherwise, cleaning without support may cause a fire, electric shock, or damage to the product.
- When cleaning the product, disconnect the AC cable and wipe it gently with a soft cloth to prevent scratches.
  - An electric shock may occur or damage to the screen if its scratched.
- Do not physically come in contact with the screen of the LED Package.
  - This may cause damage to the product.
- To clean the product, use an air gun to lightly remove dust from the front frame and the screen.
  - If there are foreign substances in between the LEDs on the screen, it may cause a defect on the screen.

CAUTION

- When cleaning the product or the screen, unplug the power cord and wipe it gently with a soft cloth. Do not spray water or other liquids directly on the product. Especially, do not clean your product with chemicals including glass cleaner, any type of air freshener, insecticide, lubricants, wax (car, industrial), abrasive, thinner, benzene, alcohol, etc., which can damage the product or its panel.
  - This may result in fire, electric shock or product damage (deformation, corrosion or breakage).

Precautions for Using the Product

WARNING

- Do not use the product in any environment with excessively high temperatures or humidity.
- If you use the product for a long period of time, take a rest from time to time to protect your vision.
  - Extended viewing could result in impaired vision.
- Listening at high volume or using for a long time can cause damage to your hearing.
- If water or any foreign substance enters a unit, turn off the unit, disconnect it from the AC cable, and contact the service centre.
  - Otherwise, the product may cause fire or electric shock.
- In the event that no image appears on the screen or no sound is heard, stop using the product. Disconnect the AC cable from the power disconnecting device immediately and contact the service centre.
  - Otherwise, the product may cause fire or electric shock.
- Do not drop an object or impact on the product or screen.
  - It can cause injury to human, problem to product and damage the screen.
- If there is smoke or a strange sound or smell, disconnect the AC cable and contact the service centre.
  - If you continue to use the product without taking proper measures, it may cause electrical shock or fire.
- Do not attempt to disassemble, repair or modify the product yourself. Please contact service centre if you need to repair it.
  - Fire or electric shock can occur.
- Do not place objects filled with liquids such as vases, cups etc. on or over the product to prevent liquid from entering the product.
  - Failure to do so may result in fire, electric shock, malfunction or deformation.
- The product must be installed in an environment out of human reach. If a person touches the product, its performance may deteriorate. If the product needs to be installed in a place where human contact with the product is likely, a separate measure to prevent people from touching it needs to be taken.
- Do not push hard on or scratch the product's surface with your hands or sharp objects, such as nails, pencils or pens. Do not shock or scratch the front and sides of the screen with metallic objects.
  - This may damage the products and cause it to malfunction.
- Do not touch the product if it has been exposed to sunlight or an intense light because it could be hot.

- Do not use high voltage electrical goods near the product (e.g., a bug zapper).
  - This may result in product malfunction if it receives an electrical shock.
- If there is a gas leak, do not touch the outlet, and open the windows for ventilation.
  - Otherwise, the product may cause fire or electric shock.
- If the product or case is dropped and damaged, turn off the power and disconnect the AC cable.
  - If you continue to use without taking proper measures, electrical shock or fire can occur. Contact the service centre.
- Keep small accessories out of the reach of children.
  - If a child swallows it, consult a doctor immediately.
- Keep out of reach of children from the product. Also, do not throw toys or objects to the product or screen.
  - It can cause injury to human, problem to product and damage the screen.
- To shut off the power of the unit, you must disconnect all connected AC cables.

⚠ CAUTION

- This panel is an advanced product that contains millions of pixels. You may occasionally see pixel spots when viewing the screen. Since these deactivated pixels are not a defect, the performance and reliability of the product is not affected.
- Do not put or store inflammable substances near the product.
  - There is a danger of explosion or fire.
- Keep the proper distance from the product.
  - It can cause damage to your vision if you look at the product too closely.
- Set the appropriate resolution and frequency by products.
  - It can cause damage to your vision.
- Take a regular break when working with the product for a long time.

Product Disposal

- Do not dispose of this product with general household waste.
- Disposal of this product must be carried out in accordance to the regulations of your local authority.

ASSEMBLING AND PREPARING

CAUTION

- Always use genuine components to ensure safety and durability of the product.
- The product warranty will not cover damage or injury caused by the use of unauthorised components.

NOTE

- The accessories provided with your product may vary depending on the model or region.
- Product specifications or contents in this manual may be changed without prior notice due to upgrade of product functions.
- The warranty will not cover any damage caused by using the product in an excessively dusty environment.

Essential Accessories

Essential accessories are subject to change or to be added without prior notices to improve the performance of the product. The images of the product in this manual are to aid comprehension and may differ from the actual appearance.

System Controller
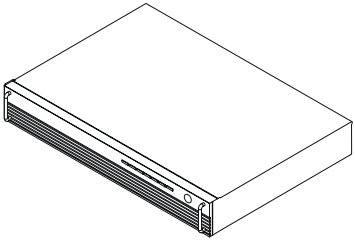
CSAA-012X5 / CSAD

NOTE

- Essential accessories are only available for some models. If necessary, please purchase them separately.

Optional Accessories

Without prior notice, optional accessories are subject to change to improve the performance of the product, and new accessories may be added. The illustrations in this manual may differ from the actual product and accessories.

Middle Frame

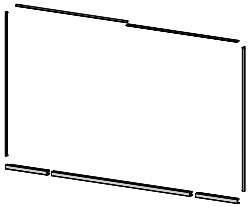

KT-BZ1080

Wall Mount

WM-LC2

WM-LC3

WM-LC4

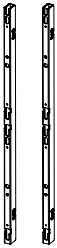

WM-LS2

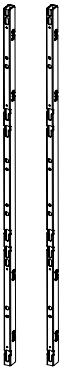

WM-LS3

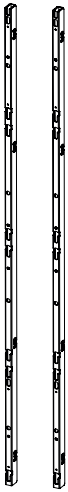

WM-LS4

Frame Jig

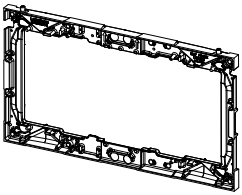

WM-LG

Handling for Protecting LED Package Screen

1 When taking out the product, make sure the screen is not pressed.

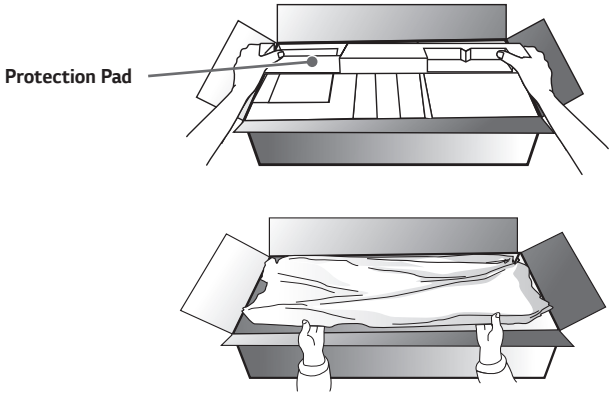

2 To stand the product upright, hold it on both sides so that the LED package screen does not touch the floor.

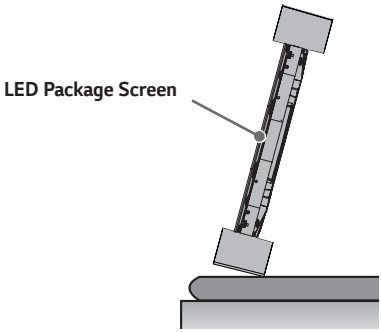

3 Place the product with the LED package screen facing down. To protect the screen, lay the protective pad in the box on the floor.

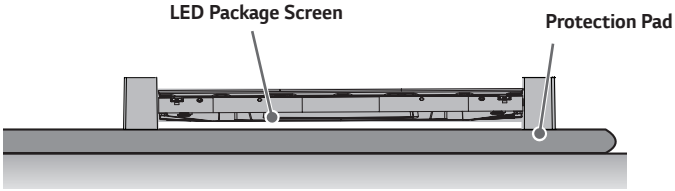

4 If you do not have a pad, make sure that there is no foreign object on the floor when you lay the product on the floor, and then carefully place the LED package screen facing down or up. Be careful not to drop objects on the LED package screen.

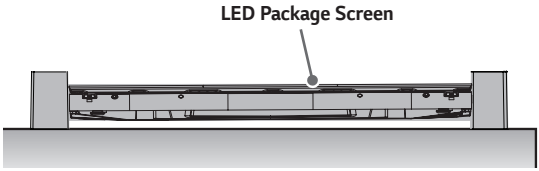

Remove Protective Bracket

Before installing the product, disassemble the protective brackets attached to each edge.

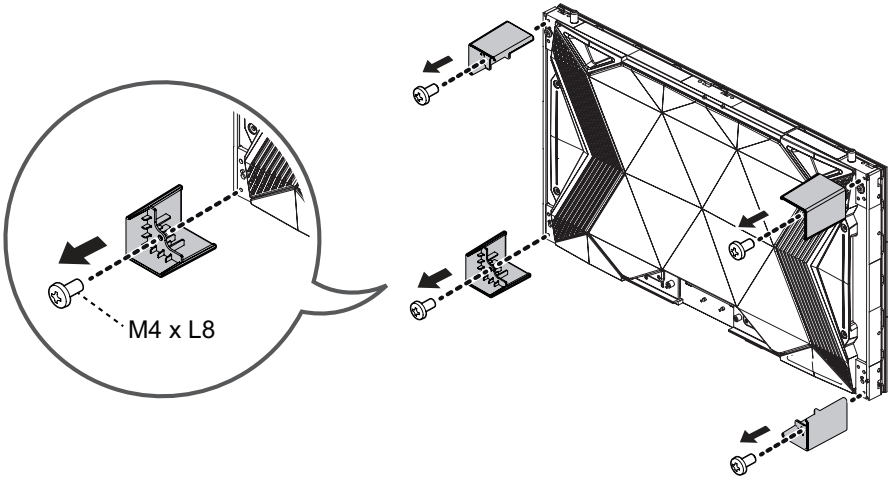

NOTE

- Keep the protective brackets because you need them to move the product again.

⚠ CAUTION

1 If the product is tilted towards the LED package screen after the brackets on the corners are removed, the bottom of the product may be damaged.

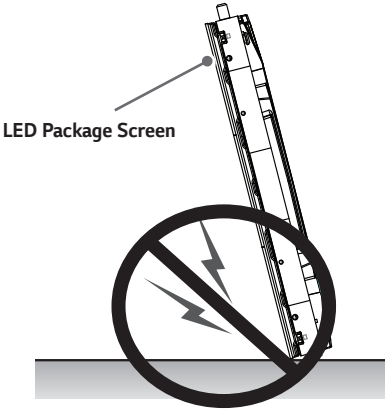

2 If the product is tilted towards the edge of the LED package screen after the brackets on the corners are removed, the bottom (corner) of the product may be damaged.

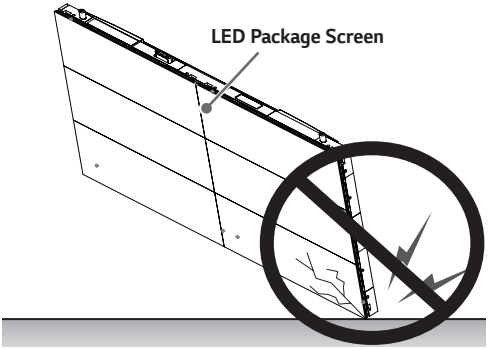

Installation Precautions Guide

Temperature

- Make a cooling system for the enclosure so that the operating temperature of the product can be maintained.
  - Product operating temperature: 0 °C to 40 °C (the recommended room temperature is below 25 °C.)
- Install in a location where the warm air from an air conditioner does not directly affect the product.
  - This will prevent malfunctions such as the screen turning off.

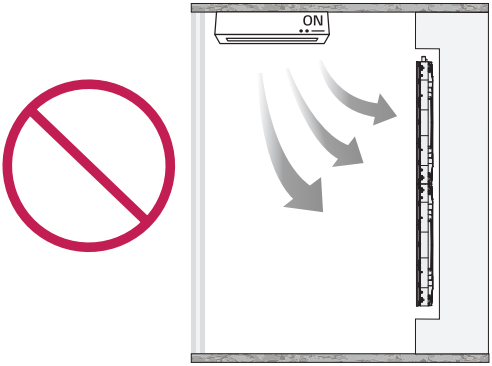

Direct Sunlight

- Install in a location that is not exposed to direct sunlight.
  - This will prevent the screen from appearing blurry due to light reflection.

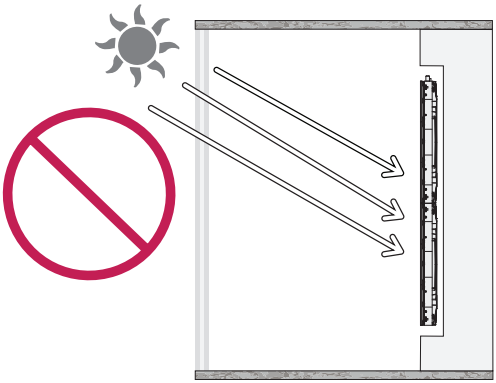

Installation Position

- Ensure the distance from the ceiling of the installation room to the product is at least 400 mm.
  - The high temperature air collected at the ceiling will naturally circulate to prevent malfunction.
- Ensure the distance from the floor of the installation room to the product is at least 100 mm.
  - The air from the floor will easily circulate to the ceiling to prevent malfunctions.

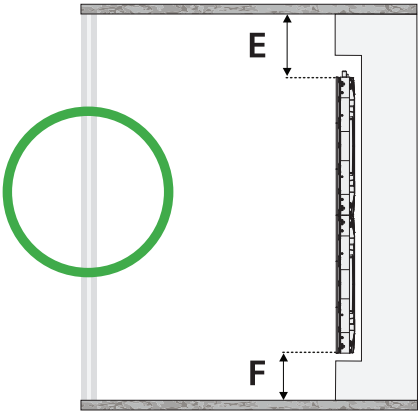

E : 400 mm or more

F : 100 mm or more

Installation Location

Installing on a Wall

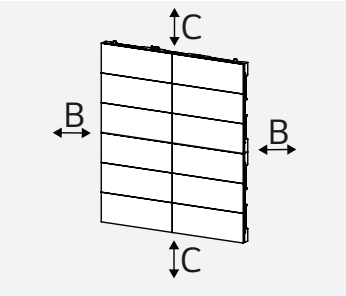

A: 30 mm or more (recommended)

- Can be installed directly on our own wall mount without using a structure. (see example)

B: 25 mm or more

C: 60 mm or more

Installing on a Recessed Wall

- After installation on a recessed wall, a bezel can be installed for interior purposes.

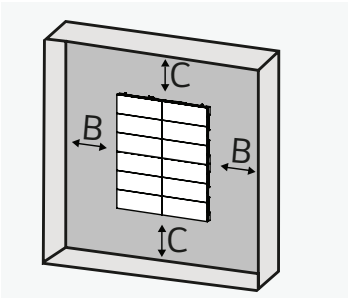

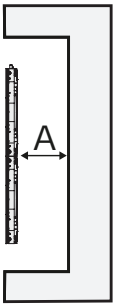

A: 30 mm or more (recommended)

- Can be installed directly on our own wall mount without using a structure. (see example)

B: 25 mm or more

C: 60 mm or more

- Example
  - Depending on the model, the shape of the wall mount may difference.

Wall mount usage scene	Wall mount and structure usage scenes
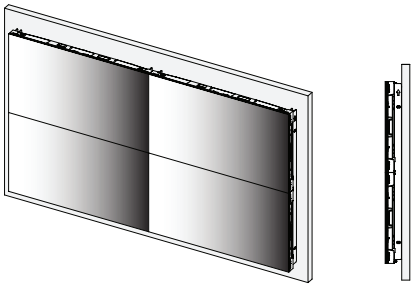	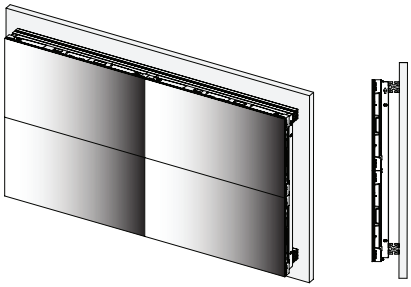

When Installing the Bezel

- Ensure it can be detached for product repair.
- For the top / bottom bezels, secure at least 60 % of the air vent to facilitate air circulation.
  - This will prevent malfunction.

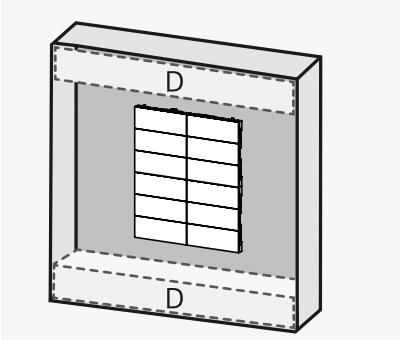

D: Air Vent
(60 % or more)

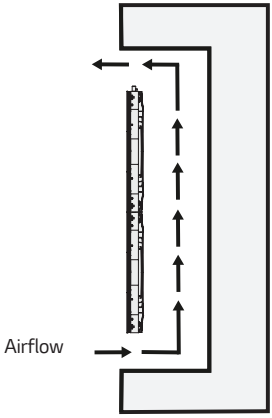

Terminal

LSAA012-MX5, LSAA012-MX6, LSAA012-NX5, LSAA012-NX6

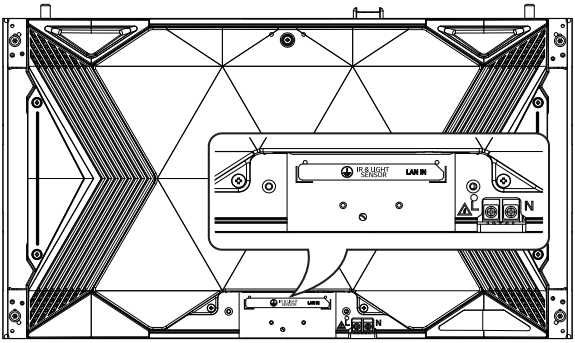

LSAA012-QX5, LSAA012-QX6, LSAA012-UX5, LSAA012-UX6

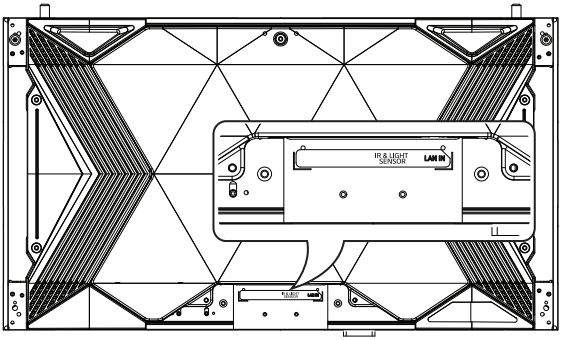

- **IR & LIGHT SENSOR:** Sends the IR signal to another set.
- **LAN IN:** Sends the LAN signal to another set.

NOTE

- The IR sensor is not provided with this product.
- For CSAA-012X5 / CSAD, the IR sensor and remote control are provided.
- Please refer to the CSAA-012X5 / CSAD's manual for how to use the IR sensor and remote control.

CONNECTING LAN (LSAA012-MX5, LSAA012-QX5, LSAA012-MX6, LSAA012-QX6, LSAA012-NX5, LSAA012-UX5, LSAA012-NX6, LSAA012-UX6)

You can connect to the CSAA-012X5 / CSAD (System Controller) by using an LAN cable.

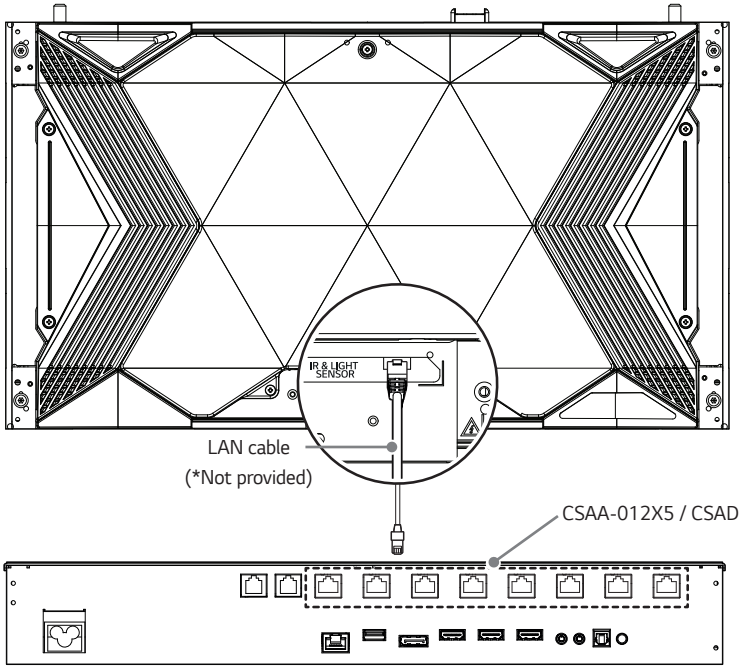

⚠ CAUTION

- Check the direction so that the LAN cable is not damaged.
- Inserting the LAN cable with excessive force may damage the contact point.

CONNECTING AC (LSAA012-MX5, LSAA012-MX6, LSAA012-NX5, LSAA012-NX6)

You can connect the unit to a power disconnecting device using an AC cable.

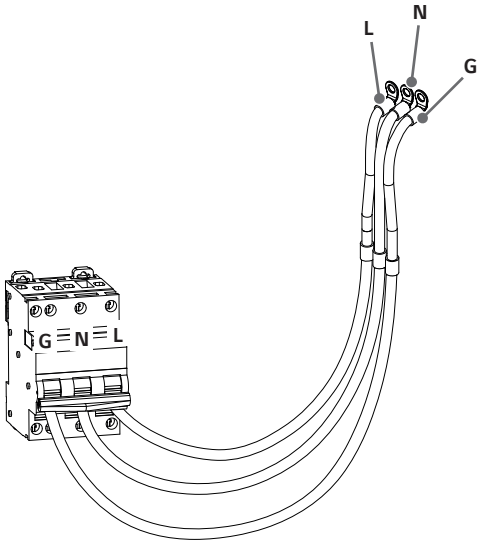

- Use the AC cable to connect to the power disconnecting device. (Please use a cable that is long enough to be connected to the screen.)
- Please use a ferrite core to block out the noise from the power supply.
- Please use 7 or more cores each to GND, L, and N when connecting to a master cabinet power cable.
  * Manufacturer: TNC CO.,LTD.

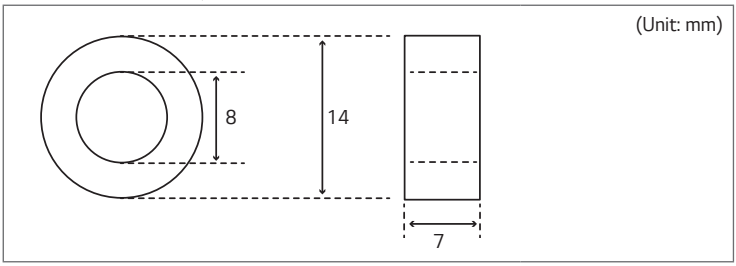

Power Connection

- Prepare the power cable of 8 A (16 AWG) or more.
- Check power cable colour connection.
- Avoid water or dust.

Country	Live	Neutral	Ground
Europe	Brown	Blue	Green & Yellow
North America	Black	White	Green & Yellow
India	Red	Black	Green & Yellow
Japan / Taiwan	Black	White	Green & Yellow
Korea	Brown	Blue	Green & Yellow

You can connect the AC cable connected to the power disconnecting device to the screen.

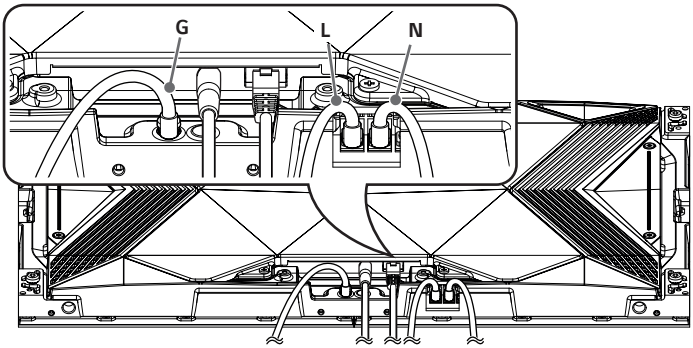

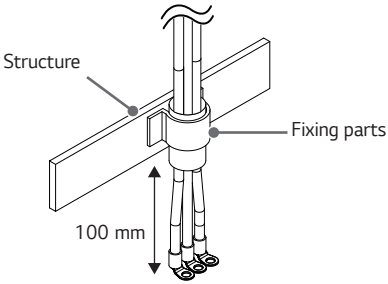

- Connect the AC cable to the screen using an angle type O-type crimp terminal to connect to the screen power supply.
- The AC cable needs to be secured to the fixing parts once it is connected to the screen. (Make sure it is secured near the screen. * 100 mm or less recommended)

TROUBLESHOOTING

No image is displayed.

- Is the AC cable connected to the product?
  - Make sure the AC cable is properly connected to the power disconnecting device.
- Is the 'No Signal' message displayed?
  - There is no connection between CSAA-012X5 / CSAD and the input source. Check the connection status of the LAN cable.
  - Access the Input menu to check the input source.
- Does the 'Invalid Mode' message appear?
  - Refer to the manual of CSAA-012X5 / CSAD.

The 'Unknown Product' message appears when the product is connected.

- Did you install the driver?
  - Refer to the manual of CSAA-012X5 / CSAD.

The screen image looks abnormal.

- Is the screen position wrong?
  - Refer to the manual of CSAA-012X5 / CSAD.
- The screen is displayed abnormally.
  - The proper input source is not connected to the port. Connect a cable that matches the input source signal.
- The screen flickers or shakes.
  - Check if CSAA-012X5 / CSAD is powered off.

The display colour is abnormal.

- Screen has poor colour resolution (16 colours).
  - Refer to the manual of CSAA-012X5 / CSAD.
- The screen colour is unstable or looks black and white.
  - Refer to the manual of CSAA-012X5 / CSAD.
- Does a black dot appear on the screen?
  - The few pixels (red, green, blue, white and black) that appear on the screen are due to the inherent characteristics of the LED surface. This is not a malfunction of the Screen.

The operation does not work normally.

- The power suddenly turned off.
  - Refer to the manual of CSAA-012X5 / CSAD.

NOTE

- Without prior notice, the software is subject to change to improve the functionality of the product.
- The above items are only applicable to the LSAA012-MX5, LSAA012-QX5, LSAA012-SX5, LSAA012-MX6, LSAA012-QX6, LSAA012-SX6, LSAA012-NX5, LSAA012-UX5, LSAA012-TX5, LSAA012-NX6, LSAA012-UX6, LSAA012-TX6 model. Please read “TROUBLESHOOTING” in the manual of CSAA-012X5 / CSAD.

PRODUCT SPECIFICATIONS

Without prior notice, the product specifications are subject to change to enhance the functionality of the product.

The ~ symbol means alternating current, and the symbol ⎓ means direct current.

LSAA012*

Pixel pitch (distance between pixels)	1.25 mm
Resolution	480 x 270
Pixel density	640,000 pixels/m^2
Number of pixels per screen	129,600 pixels
Number of colour output bits	48 bit (R: 16 bit, G: 16 bit, B: 16 bit)
Number of expressible colours	281.4 x 10^{12}
Colour temperature (K)	3,200 - 9,300 K adjustable
Operating Temperature	0 °C to 40 °C
Operating Humidity	10 % to 80 %
Storage Temperature	-20 °C to 60 °C
Storage Humidity	5 % to 85 %
Manufactured in	Republic of Korea

LSAA012-MX5

Data connection	LAN
Input/ Output ports	AC, IR & LIGHT SENSOR, LAN IN
Luminance	Max 600 nit / Peak 1,200 nit
Rating	100-240 V ~ 50/60 Hz 8.0 A
Power consumption (Max.)	75 W/Cabinet, 370 W/m^2
Power Consumption (for the normal use or video playback)	52 W/Cabinet, 255 W/m^2
Dimensions (Width x Height x Depth) / Weight	600 mm x 337.5 mm x 44.9 mm / 7.3 kg

LSAA012-QX5

Data connection	LAN
Input/ Output ports	AC, IR & LIGHT SENSOR, LAN IN
Luminance	Max 600 nit / Peak 1,200 nit
Rating	100-240 V ~ 50/60 Hz 8.0 A
Power consumption (Max.)	75 W/Cabinet, 370 W/m^2
Power Consumption (for the normal use or video playback)	52 W/Cabinet, 255 W/m^2
Dimensions (Width x Height x Depth) / Weight	600 mm x 337.5 mm x 44.9 mm / 7.3 kg

LSAA012-SX5

Input/ Output ports	Not Applied
Luminance	Max 600 nit / Peak 1,200 nit
Rating	100-240 V ~ 50/60 Hz 8.0 A
Power consumption (Max.)	75 W/Cabinet, 370 W/m^2
Power Consumption (for the normal use or video playback)	52 W/Cabinet, 255 W/m^2
Dimensions (Width x Height x Depth) / Weight	600 mm x 337.5 mm x 44.9 mm / 7.3 kg

LSAA012-MX6

Data connection	LAN
Input/ Output ports	AC, IR & LIGHT SENSOR, LAN IN
Luminance	Max 600 nit / Peak 1,200 nit
Rating	100-240 V ~ 50/60 Hz 8.0 A
Power consumption (Max.)	68 W/Cabinet, 332 W/m^2
Power Consumption (for the normal use or video playback)	52 W/Cabinet, 255 W/m^2
Dimensions (Width x Height x Depth) / Weight	600 mm x 337.5 mm x 44.9 mm / 7.3 kg

LSAA012-QX6

Data connection	LAN
Input/ Output ports	AC, IR & LIGHT SENSOR, LAN IN
Luminance	Max 600 nit / Peak 1,200 nit
Rating	100-240 V ~ 50/60 Hz 8.0 A
Power consumption (Max.)	68 W/Cabinet, 332 W/m^2
Power Consumption (for the normal use or video playback)	52 W/Cabinet, 255 W/m^2
Dimensions (Width x Height x Depth) / Weight	600 mm x 337.5 mm x 44.9 mm / 7.3 kg

LSAA012-SX6

Input/ Output ports	Not Applied
Luminance	Max 600 nit / Peak 1,200 nit
Rating	100-240 V ~ 50/60 Hz 8.0 A
Power consumption (Max.)	68 W/Cabinet, 332 W/m^2
Power Consumption (for the normal use or video playback)	52 W/Cabinet, 255 W/m^2
Dimensions (Width x Height x Depth) / Weight	600 mm x 337.5 mm x 44.9 mm / 7.3 kg

LSAA012-NX5

Data connection	LAN
Input/ Output ports	AC, IR & LIGHT SENSOR, LAN IN
Luminance	Max 600 nit / Peak 1,200 nit
Rating	100-240 V ~ 50/60 Hz 8.0 A
Power consumption (Max.)	80 W/Cabinet, 397 W/m^2
Power Consumption (for the normal use or video playback)	52 W/Cabinet, 255 W/m^2
Dimensions (Width x Height x Depth) / Weight	600 mm x 337.5 mm x 44.9 mm / 7.7 kg

LSAA012-UX5

Data connection	LAN
Input/ Output ports	AC, IR & LIGHT SENSOR, LAN IN
Luminance	Max 600 nit / Peak 1,200 nit
Rating	100-240 V ~ 50/60 Hz 8.0 A
Power consumption (Max.)	80 W/Cabinet, 397 W/m^2
Power Consumption (for the normal use or video playback)	52 W/Cabinet, 255 W/m^2
Dimensions (Width x Height x Depth) / Weight	600 mm x 337.5 mm x 44.9 mm / 7.7 kg

LSAA012-TX5

Input/ Output ports	Not Applied
Luminance	Max 600 nit / Peak 1,200 nit
Rating	100-240 V ~ 50/60 Hz 8.0 A
Power consumption (Max.)	80 W/Cabinet, 397 W/m^2
Power Consumption (for the normal use or video playback)	52 W/Cabinet, 255 W/m^2
Dimensions (Width x Height x Depth) / Weight	600 mm x 337.5 mm x 44.9 mm / 7.7 kg

LSAA012-NX6

Data connection	LAN
Input/ Output ports	AC, IR & LIGHT SENSOR, LAN IN
Luminance	Max 600 nit / Peak 1,200 nit
Rating	100-240 V ~ 50/60 Hz 8.0 A
Power consumption (Max.)	72 W/Cabinet, 354 W/m^2
Power Consumption (for the normal use or video playback)	52 W/Cabinet, 255 W/m^2
Dimensions (Width x Height x Depth) / Weight	600 mm x 337.5 mm x 44.9 mm / 7.7 kg

LSAA012-UX6

Data connection	LAN
Input/ Output ports	AC, IR & LIGHT SENSOR, LAN IN
Luminance	Max 600 nit / Peak 1,200 nit
Rating	100-240 V ~ 50/60 Hz 8.0 A
Power consumption (Max.)	72 W/Cabinet, 354 W/m^2
Power Consumption (for the normal use or video playback)	52 W/Cabinet, 255 W/m^2
Dimensions (Width x Height x Depth) / Weight	600 mm x 337.5 mm x 44.9 mm / 7.7 kg

LSAA012-TX6

Input/ Output ports	Not Applied
Luminance	Max 600 nit / Peak 1,200 nit
Rating	100-240 V ~ 50/60 Hz 8.0 A
Power consumption (Max.)	72 W/Cabinet, 354 W/m^2
Power Consumption (for the normal use or video playback)	52 W/Cabinet, 255 W/m^2
Dimensions (Width x Height x Depth) / Weight	600 mm x 337.5 mm x 44.9 mm / 7.7 kg

Wireless module (KSS104M) Specifications	
ASK (Amplitude Shift Keying)	
Frequency Range	**Output Power (Max. dBm e.i.r.p.)**
57 GHz to 64 GHz	10
• For consideration of the user, this device should be installed and operated with a minimum distance of 20 cm between the device and the body.	
(Only Nigeria) **Connection and use of this communications equipment is permitted by the Nigerian Communications Commission**	

(Only India)

Wireless module (KSS104M) Specifications	
ASK (Amplitude Shift Keying)	
Frequency Range	**Output Power (Max. dBm e.i.r.p.)**
61 GHz to 61.5 GHz	10
• For consideration of the user, this device should be installed and operated with a minimum distance of 20 cm between the device and the body.	

(Unit: mm)

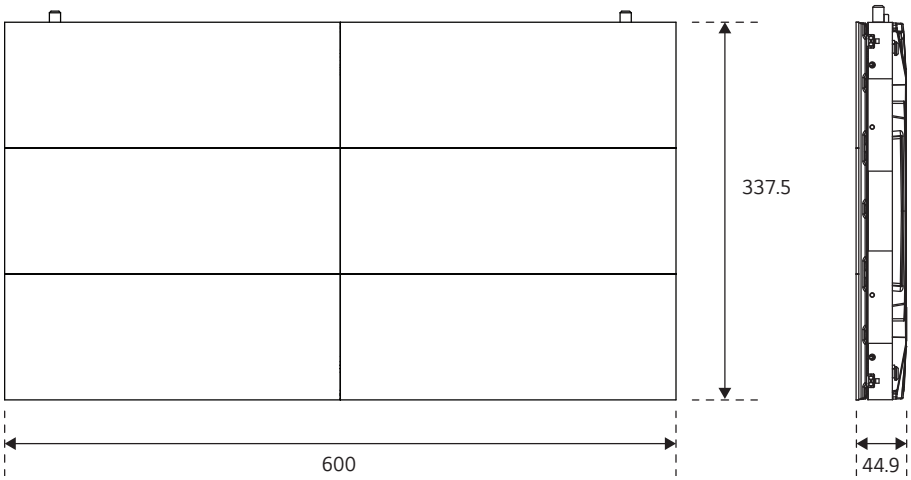

The model and serial number of the product are located on the back and on one side of the product.
Record them below in case you ever need service.

MODEL

SERIAL NO.

Temporary noise is normal when powering ON or OFF this device.