MBM63560609

SIGNATURE KITCHEN SUITE

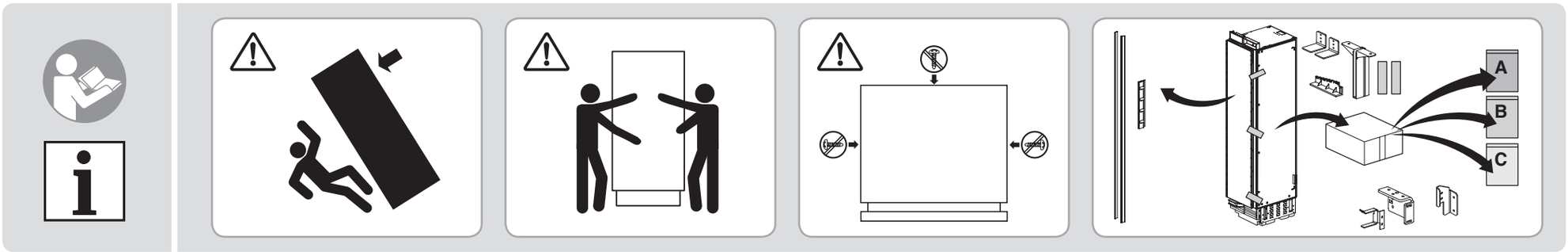

A

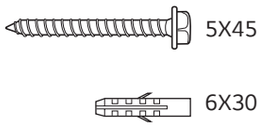

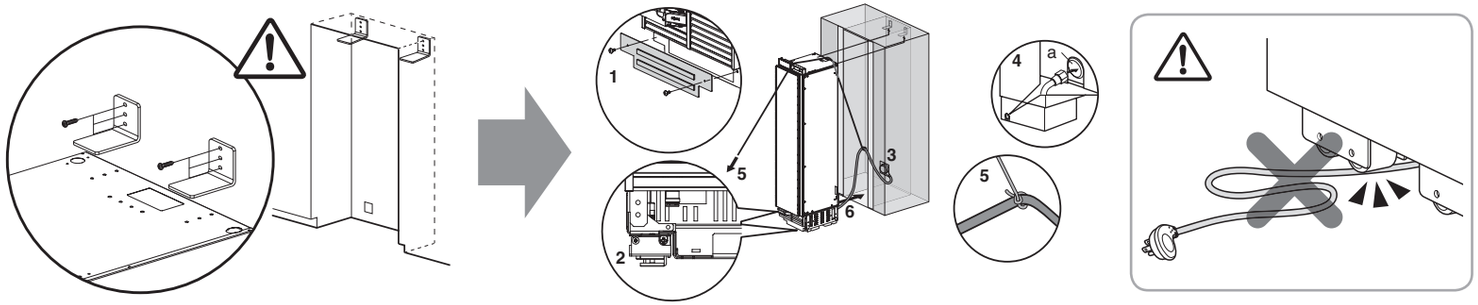

B

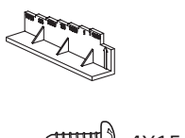

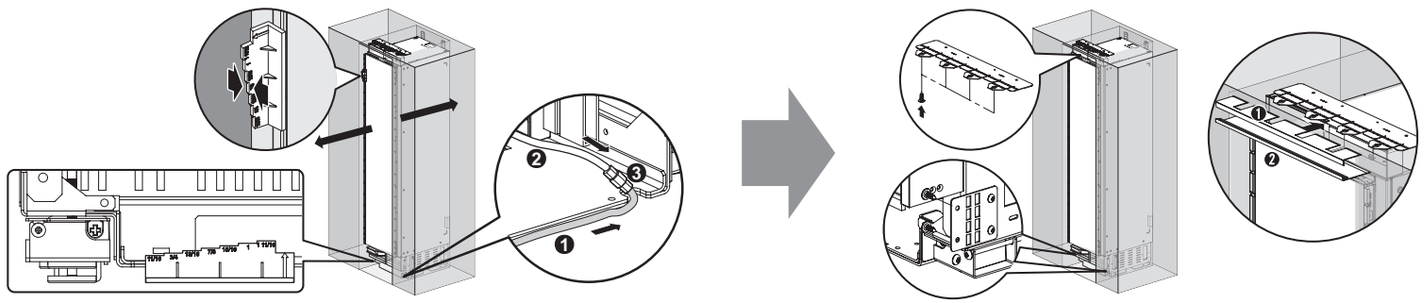

C

