Additional Information

Specifications

Power Requirements	Refer to the main label on the unit.
Power Consumption	Refer to the main label on the unit.
Dimensions (W x H x D)	Approx. 450.0 mm x 167.0 mm x 332.0 mm
Bus Power Supply (USB)	5 V ⎓ 500 mA
Amplifier (Total RMS output power)	2,900 W RMS

Design and specifications are subject to change without notice.

Replacement of battery

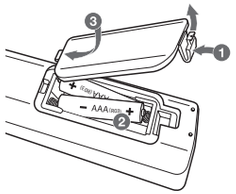

About Ferrite Core (Optional)

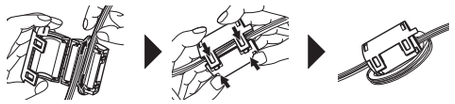

Wind power cord cable around the ferrite core twice.

Caution

- When you use the multiple socket, it is advisable to use 15 A socket. 10 A socket may cause power off due to lack of power supply.
- Do not place objects on the speakers. It may cause the objects to fall and make property damage.
- Install the speakers on a firm surface not to slide. The vibration caused by the strong output can shake and move the speakers.
- Avoid turning up max volume in a small enclosed space. The powerful and intense output of the speakers can shake the ceiling and get the objects in the room falling.
- To protect from hearing damage, keep the sufficient distance from the speaker. The overwhelming sound from the speaker may cause a person's hearing damage.
- Connect the power cord to wall outlet directly if possible. Or when you use an extension cable, it is highly recommended to use an extension cable of 110 V / 15 A or 230 V / 15 A, otherwise the unit may not operate properly because of the lack of power supply.
- Do not overload the extension cord with excessive electrical load.

Note

- Do not look directly at the light emitting part when the LIGHTING is turned on.
- If the illumination brightness is glaring, switch on the room lights or turn off the LIGHTING of the unit.

ENGLISH

SIMPLE MANUAL

Mini Hi-Fi System

Please read this manual carefully before operating your set and retain it for future reference.
To view the instructions of advanced features, visit http://www.lg.com and then download Owner's Manual.
Some of the content in this manual may differ from your unit.

MODEL

CL88

This product has no disc drive.

COV32311302
2506_Rev01

www.lg.com

Copyright © 2026 LG Electronics Inc. All Rights Reserved.

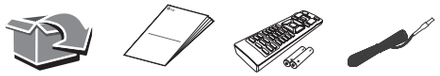

Front Panel

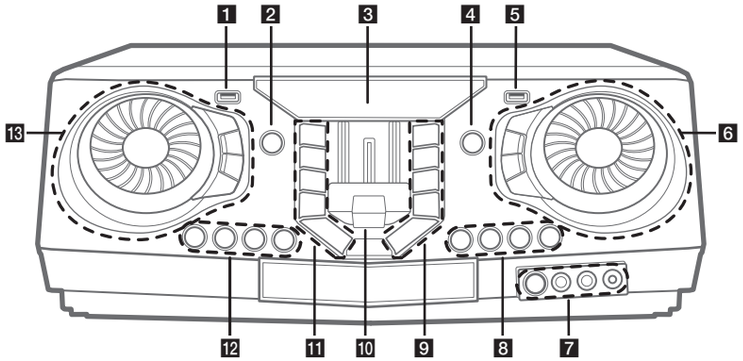

1 USB 1 Port

You can play sound files by connecting the USB device.

2 ⏻ (Standby)

Turns the power on or off.

3 Display window

4 **F** (Function)

Selects the function and input source.

5 USB 2 Port

You can play sound files by connecting the USB device.

6 **MASTER VOLUME**

- Adjusts speaker volume.
- Selects the lighting effects.
- Selects vocal effects.

LIGHTING

Selects the lighting mode.

MIC VOL (Microphone volume) **-/+**

Adjusts microphone volume.

MIC (Microphone) **ECHO**

Selects ECHO mode.

7 (Remote sensor)

MIC (Microphone) **1/2** jack

AUX IN 1 jack

8 **KEY CHANGER (#/♭)**

Changes the key to suit your vocal range.

VOICE CANCELLER

You can reduce the vocal tones during music playback from various input sources.

VOCAL EFFECTS

Selects various vocal effects mode.

9 **TWIN**

Connects two speakers for TWIN mode in WIRELESS PARTY LINK.

DJ LOOP

Selects DJ LOOP mode.
(DJ LOOP mode can use during USB playback.)

⏯ (Play/Pause)

- Starts or pauses playback.
- Selects stereo/mono.

⏭ (Skip/Search)

- Skips forward.
- Searches for a section within a file.
- Selects the radio stations.

PARTY ACCELERATOR MODE

Selects PARTY ACCELERATOR MODE.

10 **PARTY ACCELERATOR** lever

Slide the lever to create a party atmosphere.

11 **USB REC / DEMO**

- Records to USB.
- Stops Recording.
- In power off status, if you press **USB REC / DEMO**, show DEMO mode.

SPECIAL EQ / BASS BLAST (or BASS BLAST+)

- Chooses special equalizer.
- Press and hold to select BASS (or BASS+) effect directly.

□ (Stop)

Stops playback or cancels DELETE function.

⏮ (Skip/Search)

- Skips backward.
- Searches for a section within a file.
- Selects the radio stations.

ⓘ (Information)

- Sees information about your music. An MP3 file often come with ID3 tag. The tag gives the Title, Artist, Album or Time information.
- Sees **Bluetooth** device name of the unit in BT READY.
- Sees the name of connected all **Bluetooth** device in **Bluetooth** mode.
- When these units are successfully connected each other in WIRELESS PARTY LINK mode, each of connected device names appears in the each unit.

12 **CLUB, DRUM, USER** (DJ PAD)

Selects CLUB, DRUM or USER sound effect to mix. (If you want to use USER, you have to register a source with "LG XBOOM" app.)

1, 2, 3, 4 (DJ PAD)

Press a desired sound pad.

13 **DJ SCRATCHER / LEVEL CONTROL & SEARCH**

- Turns clockwise or counterclockwise to make scratch sound.
- Turns clockwise or counterclockwise to control the USER EQ level.
- Searches a folder or a file.
- Adjust DJ EFFECT level.

DJ EFFECT

Selects a desired DJ EFFECT.

SEARCH

Moves to folder or file in selection mode.

OK

Selects a folder when searching a file.

USER EQ

Selects the equalizer created by your own

Rear Panel

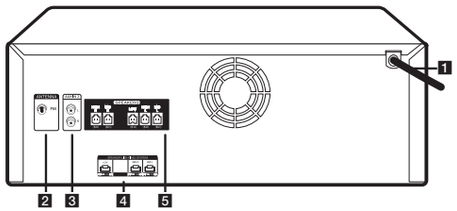

1 Power cord

2 **ANTENNA** (FM)

3 **AUX IN 2** (L/R)

4 **SPEAKER LIGHTING SYSTEM**

Connect the speaker lighting cables.

5 **SPEAKERS** connector

Speaker Connection

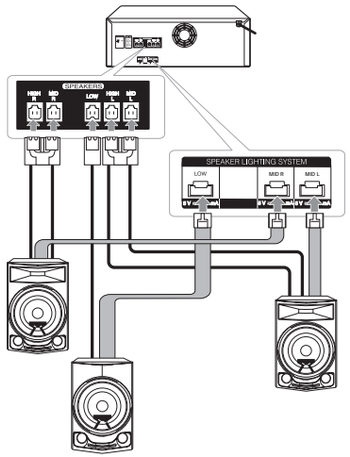

Controller App

Download the **LG XBOOM** App to your device. (Android only)

LG Sound Sync (Wireless)

For more information, download the online owner's manual. **http://www.lg.com**