LG
Life's Good

OLED TV
EW96**

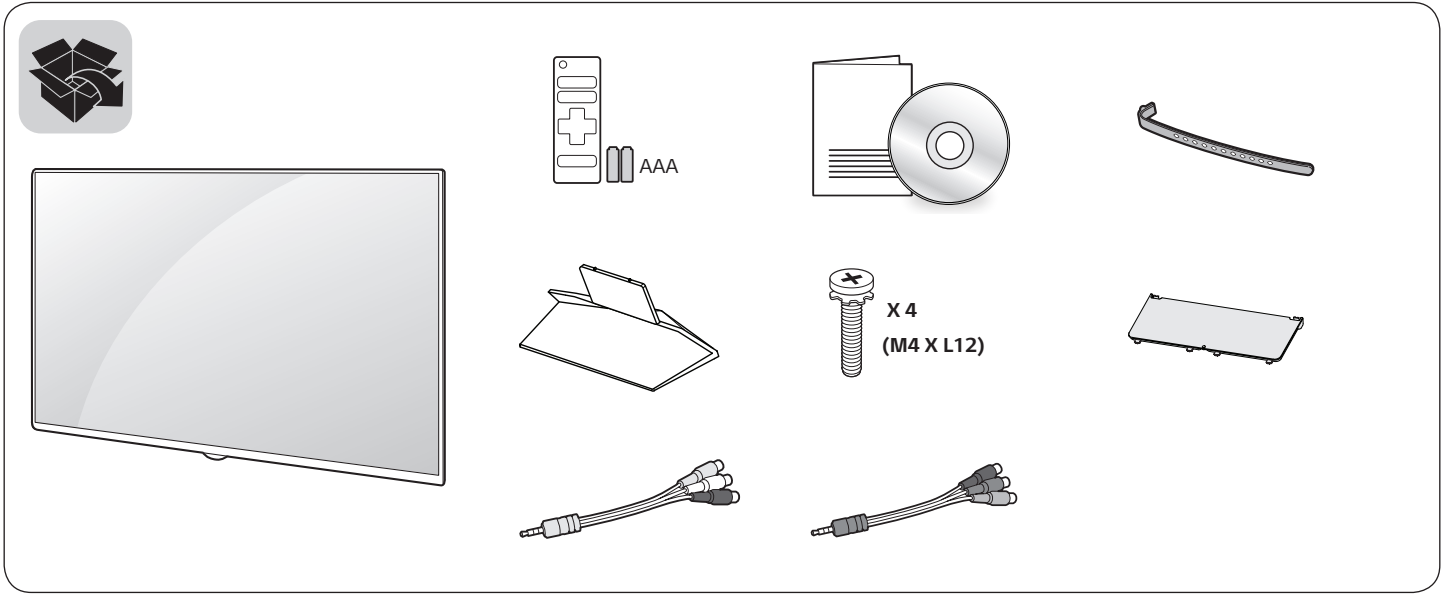

www.lg.com

English

- Read **Safety and Reference.**
- For the power supply and power consumption, refer to the label attached to the product.

العربية

- قراءة **الأمان والمرجع.**
- لمعرفة المزيد حول مصدر الإمداد بالطاقة المطلوب ومعايير استهلاك الطاقة، راجع الملصق الموجود على المنتج.

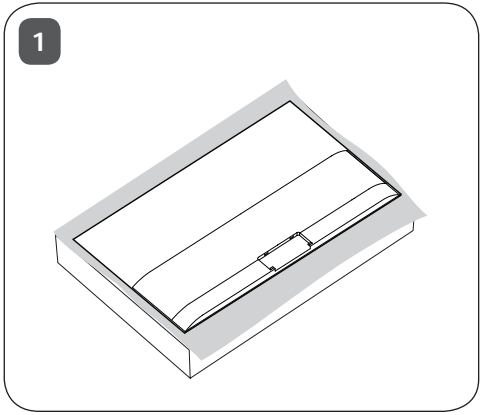
1

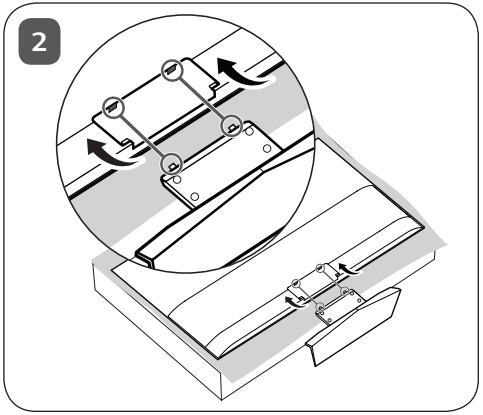
2

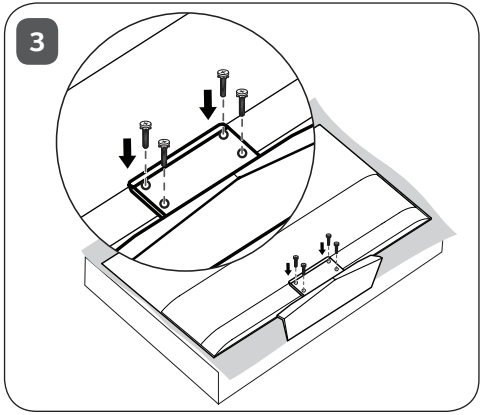
3

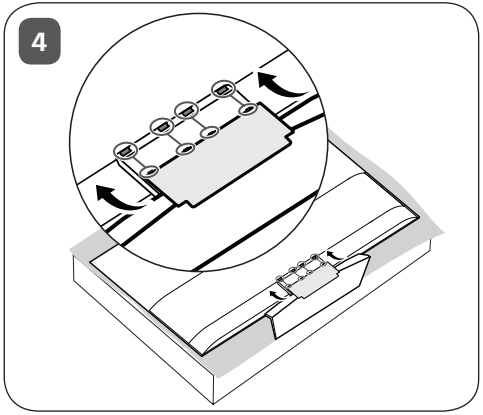
4

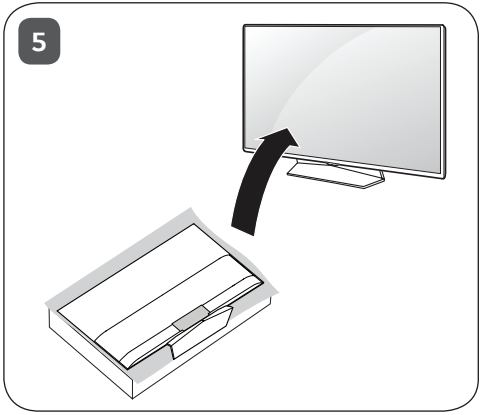
5

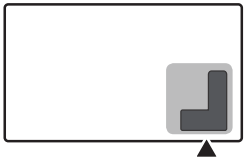

ANTENNA / CABLE IN

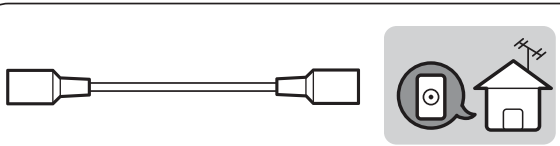

HDMI IN

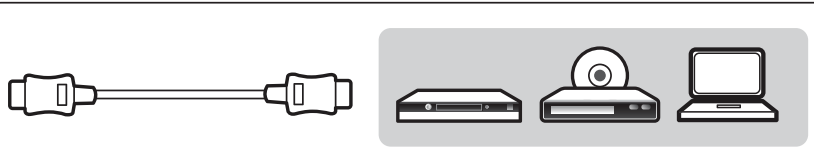

HDMI IN/ARC

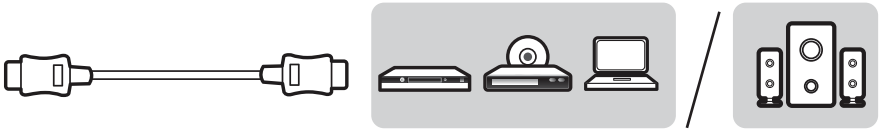

USB IN

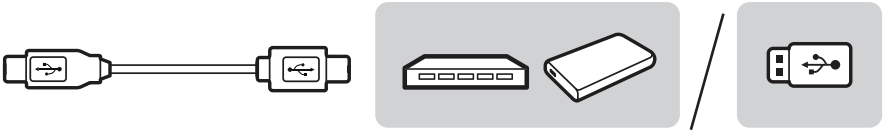

H/P OUT

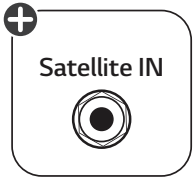

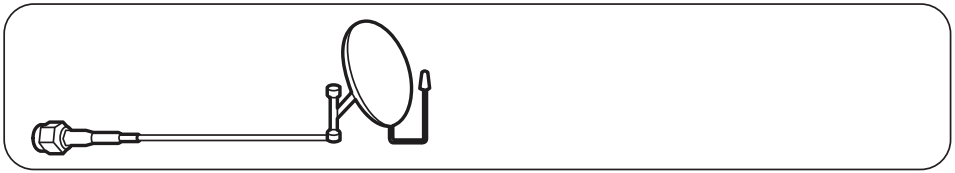

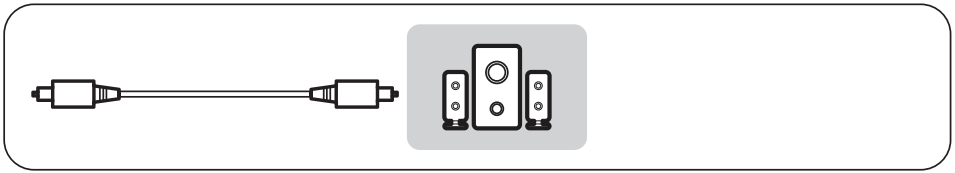

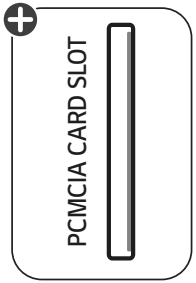

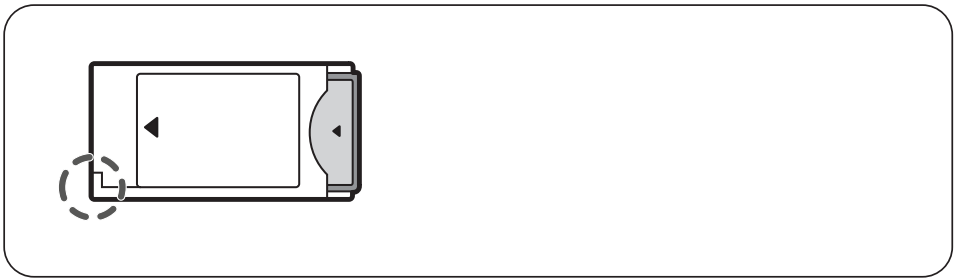

⊕ : Depending on model / حسب الطراز

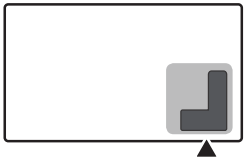

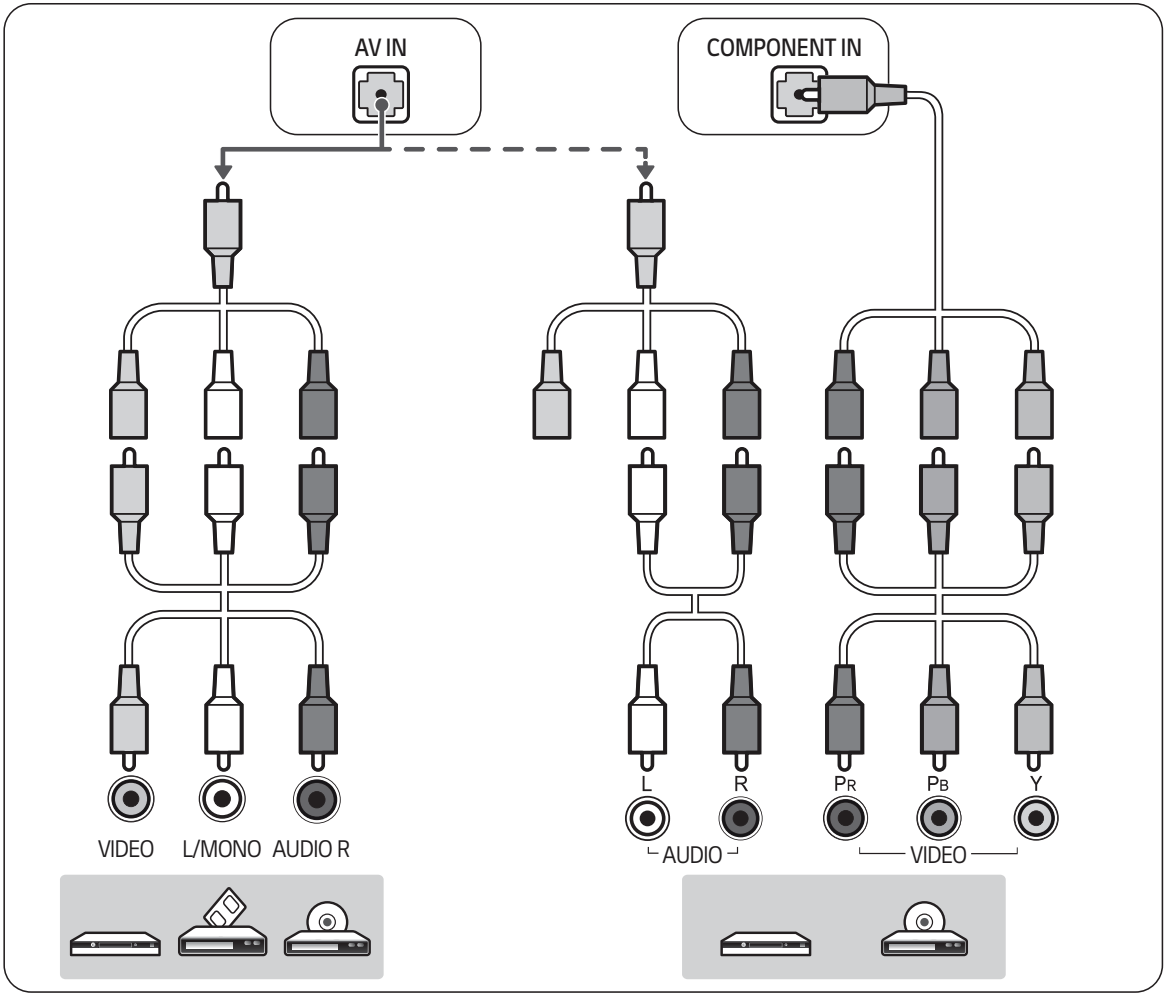
AV IN
COMPONENT IN
VIDEO
L/MONO
AUDIO R
L
R
PR
PB
Y
AUDIO
VIDEO

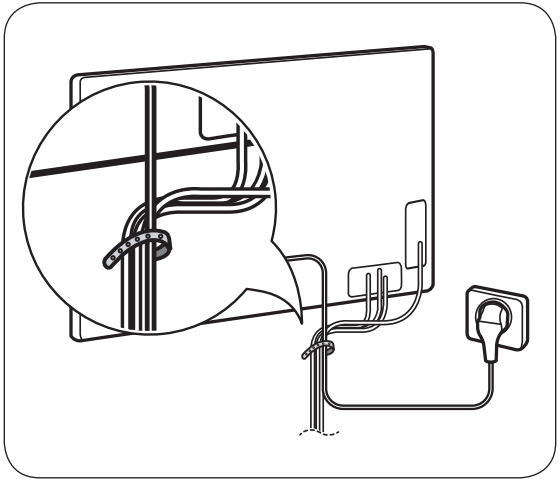

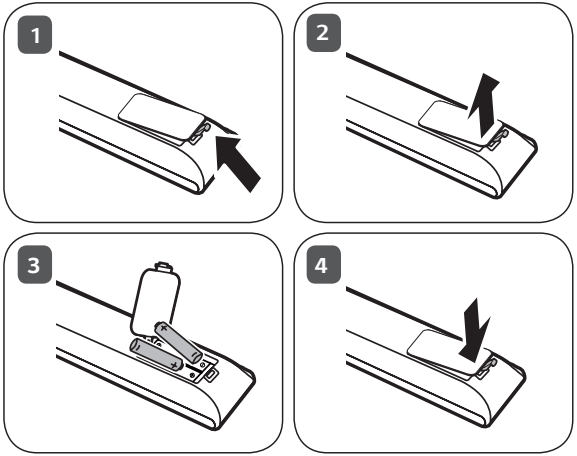
1
2
3
4

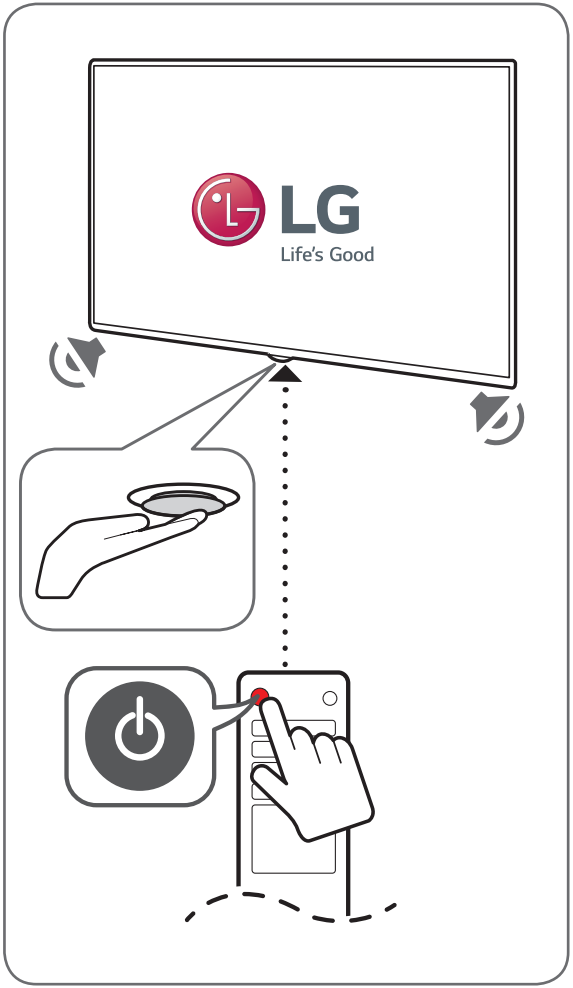
LG
Life's Good

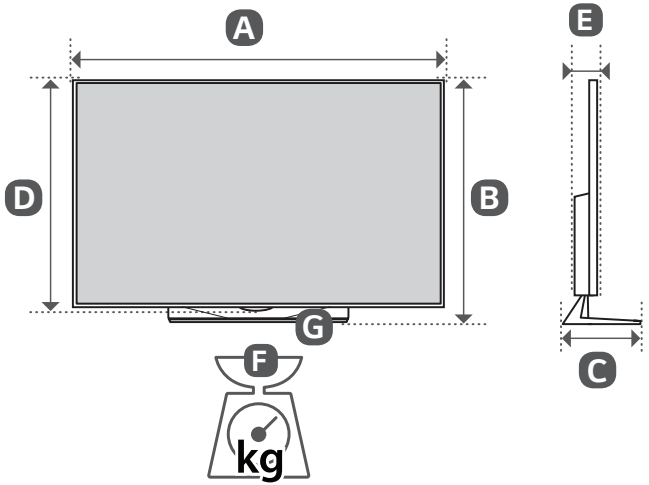

	A (mm)	B (mm)	C (mm)	D (mm)	E (mm)	F (kg)	F - G (kg)
55EW961H-TA	1229	759	225	715	48.6	19.5	16.2
65EW961H-TA	1451	882	225	838	48.6	25.9	22.6
Power requirement / متطلبات الطاقة				AC 100-240 V ~ 50 / 60 Hz تيار متردد 100 - 240 فولت ~ 50 / 60 هرتز			

LG
Life's Good

OWNER'S MANUAL

Safety and Reference

Please read this manual carefully before operating your set and retain it for future reference.

www.lg.com

Safety instructions

Please read these safety precautions carefully before using the product.

WARNING

Do not place the TV and/or remote control in the following environments:

- A location exposed to direct sunlight
- An area with high humidity such as a bathroom
- Near any heat source such as stoves and other devices that produce heat
- Near kitchen counters or humidifiers where they can easily be exposed to steam or oil
- An area exposed to rain or wind
- Near containers of water such as vases

Otherwise, this may result in fire, electric shock, malfunction or product deformation.

Do not place the product where it might be exposed to dust. This may cause a fire hazard.

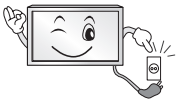

Mains Plug is the TV connecting/disconnecting device to AC mains electric supply. This plug must remain readily attached and operable when TV is in use.

Do not touch the power plug with wet hands. Additionally, if the cord pin is wet or covered with dust, dry the power plug completely or wipe dust off. You may be electrocuted due to excess moisture.

Make sure to connect Mains cable to compliant AC mains socket with Grounded earth pin. (Except for devices which are not grounded on earth.) Otherwise possibility you may be electrocuted or injured.

Insert power cable plug completely into wall socket otherwise if not secured completely into socket, fire ignition may break out.

Ensure the power cord does not come into contact with hot objects such as a heater. This may cause a fire or an electric shock hazard.

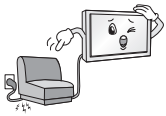

Do not place a heavy object, or the product itself, on power cables. Otherwise, this may result in fire or electric shock.

Bend antenna cable between inside and outside building to prevent rain from flowing in. This may cause water damaged inside the Product and could give an electric shock.

When mounting TV onto wall make sure to neatly install and isolate cabling from rear of TV as to not create possibility of electric shock / fire hazard.

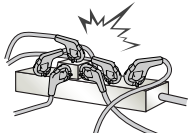

Do not plug too many electrical devices into a single multiple electrical outlet. Otherwise, this may result in fire due to over-heating.

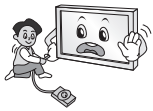

Do not drop the product or let it fall over when connecting external devices. Otherwise, this may result in injury or damage to the product.

Keep the anti-moisture packing material or vinyl packing out of the reach of children. Anti-moisture material is harmful if swallowed. If swallowed by mistake, force the patient to vomit and visit the nearest hospital. Additionally, vinyl packing can cause suffocation. Keep it out of the reach of children.

Do not let your children climb or cling onto the TV.
Otherwise, the TV may fall over, which may cause serious injury.

Dispose of used batteries carefully to ensure that a small child does not consume them. Please seek Doctor- Medical Attention immediately if child consumes batteries.

Do not insert any metal objects/conductors (like a metal chopstick/ cutlery/screwdriver) between power cable plug and input Wall Socket while it is connected to the input terminal on the wall. Additionally, do not touch the power cable right after plugging into the wall input terminal. You may be electrocuted. (Depending on model)

Do not put or store inflammable substances near the product. There is a danger of combustion/explosion or fire due to careless handling of the inflammable substances.

Do not drop metallic objects such as coins, hair pins, chopsticks or wire into the product, or inflammable objects such as paper and matches. Children must pay particular attention. Electrical shock, fire or injury can occur. If a foreign object is dropped into the product, unplug the power cord and contact the service centre.

Do not spray water on the product or scrub with an inflammable substance (thinner or benzene). Fire or electric shock accident can occur.

Do not allow any impact, shock or any objects to fall into the unit, and do not drop anything onto the screen. You may be injured or the product can be damaged.

Never touch this product or antenna during a thunder or lighting storm. You may be electrocuted.

Never touch the wall outlet when there is leakage of gas, open the windows and ventilate. It may cause a fire or a burn by a spark.

Do not disassemble, repair or modify the product at your own discretion. Fire or electric shock accident can occur.
Contact the service centre for check, calibration or repair.

If any of the following occur, unplug the product immediately and contact your local service centre.

- The product has been impacted by shock
- The product has been damaged
- Foreign objects have entered the product
- The product produced smoke or a strange smell

This may result in fire or electric shock.

Unplug the TV from AC mains wall socket if you do not intend to use the TV for a long period of time. Accumulated dust can cause fire hazard and insulation deterioration can cause electric leakage/shock/fire.

Apparatus shall not be exposed to dripping or splashing and no objects filled with liquids, such as vases, shall be placed on the apparatus.

Do not install this product on a wall if it could be exposed to oil or oil mist. This may damage the product and cause it to fall.

If water enters or comes into contact with TV, AC adapter or power cord please disconnect the power cord and contact service centre immediately. Otherwise, this may result in electric shock or fire.

Only use an authorized AC adapter and power cord approved by LG Electronics. Otherwise, this may result in fire, electric shock, malfunction or product deformation.

Never Disassemble the AC adapter or power cord. This may result in fire or electric shock.

Be careful in handling the adapter to prevent any external shocks to it. An external shock may cause damage to the adapter.

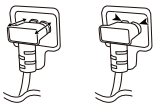

Make sure the power cord is connected securely to the power plug on the TV. (Depending on model)

⚠ CAUTION

Install the product where no radio wave occurs.

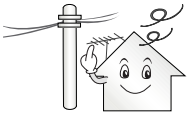

There should be enough distance between an outside antenna and power lines to keep the former from touching the latter even when the antenna falls. This may cause an electric shock.

Do not install the product on places such as unstable shelves or inclined surfaces. Also avoid places where there is vibration or where the product cannot be fully supported. Otherwise, the product may fall or flip over, which may cause injury or damage to the product.

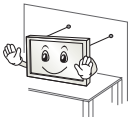

If you install the TV on a stand, you need to take actions to prevent the product from overturning. Otherwise, the product may fall over, which may cause injury.

If you intend to mount the product to a wall, attach VESA standard mounting interface (optional parts) to the back of the product. When you install the set to use the wall mounting bracket (optional parts), fix it carefully so as not to drop.

Only use the attachments / accessories specified by the manufacturer.

When installing the antenna, consult with a qualified service technician. If not installed by a qualified technician, this may create a fire hazard or an electric shock hazard.

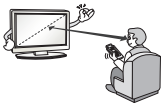

We recommend that you maintain a distance of at least 2 to 7 times the diagonal screen size when watching TV. If you watch TV for a long period of time, this may cause blurred vision.

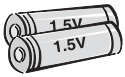

Only use the specified type of battery. This could cause damage to the remote control.

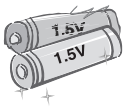

Do not mix new batteries with old batteries. This may cause the batteries to overheat and leak.

Batteries should not be exposed to excessive heat. For example, keep away from direct Sunlight , open fireplace and electric heaters.

Do not place non-rechargeable batteries in charging device.

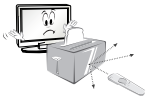

Make sure there are no objects between the remote control and its sensor.

Signal from Remote Control can be interrupted due to external/internal lighting eg Sunlight, fluorescent lighting. If this occurs turn off lighting or darken viewing area.

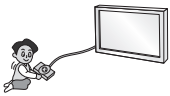

When connecting external devices such as video game consoles, make sure the connecting cables are long enough. Otherwise, the product may fall over, which may cause injury or damage the product.

Do not turn the product On/Off by plugging-in or unplugging the power plug to the wall outlet. (Do not use the power plug for switch.) It may cause mechanical failure or could give an electric shock.

Please follow the installation instructions below to prevent the product from overheating.

- The distance between the product and the wall should be more than 10 cm.
- Do not install the product in a place with no ventilation (e.g., on a bookshelf or in a cupboard).
- Do not install the product on a carpet or cushion.
- Make sure the air vent is not blocked by a tablecloth or curtain.

Otherwise, this may result in fire.

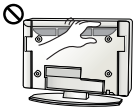

Take care not to touch the ventilation openings when watching the TV for long periods as the ventilation openings may become hot. This does not affect the operation or performance of the product.

Periodically examine the cord of your appliance, and if its appearance indicates damage or deterioration, unplug it, discontinue use of the appliance, and have the cord replaced with an exact replacement part by an authorized servicer.

Prevent dust collecting on the power plug pins or outlet. This may cause a fire hazard.

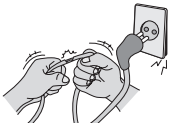

Protect the power cord from physical or mechanical abuse, such as being twisted, kinked, pinched, closed in a door, or walked upon. Pay particular attention to plugs, wall outlets, and the point where the cord exits the appliance.

Do not press strongly upon the panel with a hand or sharp object such as nail, pencil or pen, or make a scratch on it, as it may cause damage to screen.

Avoid touching the screen or holding your finger(s) against it for long periods of time. Doing so may produce some temporary or permanent distortion/damage to screen.

When cleaning the product and its components, unplug the power first and wipe it with a soft cloth. Applying excessive force may cause scratches or discolouration. Do not spray with water or wipe with a wet cloth. Never use glass cleaner, car or industrial shiner, abrasives or wax, benzene, alcohol etc., which can damage the product and its panel. Otherwise, this may result in fire, electric shock or product damage (deformation, corrosion or breakage).

As long as this unit is connected to the AC wall outlet, it is not disconnected from the AC power source even if you turn off this unit by SWITCH.

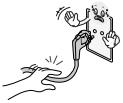

When unplugging the cable, grab the plug and unplug it, by pulling at the plug.

Don't pull at the cord to unplug the power cord from the power board, as this could be hazardous.

When moving the product, make sure you turn the power off first. Then, unplug the power cables, antenna cables and all connecting cables. The TV set or power cord may be damaged, which may create a fire hazard or cause electric shock.

When moving or unpacking the product, work in pairs because the product is heavy. Otherwise, this may result in injury.

Refer all servicing to qualified service personnel. Servicing is required when the apparatus has been damaged in any way, such as power supply cord or plug is damaged, liquid has been spilled or objects have fallen into the apparatus, the apparatus has been exposed to rain or moisture, does not operate normally, or has been dropped.

If the product feels cold to the touch, there may be a small "flicker" when it is turned on. This is normal, there is nothing wrong with product.

This panel is an advanced product that contains millions of pixels. You may see tiny black dots and/or brightly coloured dots (white, red, blue or green) at a size of 1 ppm on the panel. This does not indicate a malfunction and does not affect the performance and reliability of the product.
This phenomenon also occurs in third-party products and is not subject to exchange or refund.

You may find different brightness and color of the panel depending on your viewing position(left/right/top/down).
This phenomenon occurs due to the characteristic of the panel. It is not related with the product performance, and it is not malfunction.

Displaying a still image for a prolonged period of time may cause image sticking. Avoid displaying a fixed image on the TV screen for a long period of time.

Some horizontal lines may appear when the Clear Panel Noise feature is performed. It is normal and there is no need to be concerned.

Generated Sound

"Cracking" noise: A cracking noise that occurs when watching or turning off the TV is generated by plastic thermal contraction due to temperature and humidity. This noise is common for products where thermal deformation is required. Electrical circuit humming/panel buzzing:
A low level noise is generated from a high-speed switching circuit, which supplies a large amount of current to operate a product. It varies depending on the product.
This generated sound does not affect the performance and reliability of the product.

Do not use high voltage electrical goods near the TV (e.g. electric mosquito-swatter). This may result in product malfunction.

Preparing

NOTE

- If the TV is turned on for the first time after it was shipped from the factory, initialization of the TV may take a few minutes.
- Image shown may differ from your TV.
- Your TV's OSD (On Screen Display) may differ slightly from that shown in this manual.
- The available menus and options may differ from the input source or product model that you are using.
- New features may be added to this TV in the future.
- The items supplied with your product may vary depending on the model.
- Product specifications or contents of this manual may be changed without prior notice due to upgrade of product functions.
- For an optimal connection, HDMI cables and USB devices should have bezels less than 10 mm thick and 18 mm width. Use an extension cable that supports USB 2.0 if the USB cable or USB memory stick does not fit into your TV's USB port.

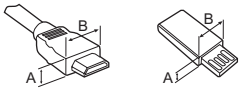

- Use a certified cable with the HDMI logo attached.
- If you do not use a certified HDMI cable, the screen may not display or a connection error may occur. (Recommended HDMI Cable Types)
  - High-Speed HDMI®/™ Cable (3 m or less)
  - High-Speed HDMI®/™ Cable with Ethernet (3 m or less)

CAUTION

- Do not use any unapproved items to ensure the safety and product life span.
- Any damage or injuries caused by using unapproved items are not covered by the manufacturer's warranty.
- Some models have a thin film attached on to the screen and this must not be removed.
- When attaching the stand to the TV set, place the screen facing down on a cushioned table or flat surface to protect the screen from scratches.
- Make sure that the screws are inserted correctly and fastened securely. (If they are not fastened securely enough, the TV may tilt forward after being installed.) Do not use too much force and over tighten the screws; otherwise screw may be damaged and not tighten correctly.
- Make sure to wring any excess water or cleaner from the cloth.
- Do not spray water or cleaner directly onto the TV screen.
- Make sure to spray just enough of water or cleaner onto a dry cloth to wipe the screen.

Separate purchase

Separate purchase items can be changed or modified for quality improvement without any notification. Contact your dealer to buy these items. These devices only work with certain models.

The model name or design may be changed depending on the upgrade of product functions, manufacturer's circumstances or policies.

(Depending on model)

AN-MR650 Magic Remote

Lifting and moving the TV

Please note the following advice to prevent the TV from being scratched or damaged and for safe transportation regardless of its type and size.

- It is recommended to move the TV in the box or packing material that the TV originally came in.
- Before moving or lifting the TV, disconnect the power cord and all cables.
- When holding the TV, the screen should face away from you to avoid damage.

- Hold the top and bottom of the TV frame firmly. Make sure not to hold the transparent part, speaker, or speaker grill area.

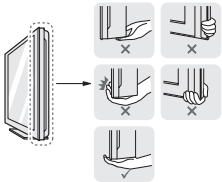

- When transporting a large TV, there should be at least 2 people.
- When transporting the TV by hand, hold the TV as shown in the following illustration.

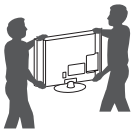

- When transporting the TV, do not expose the TV to jolts or excessive vibration.
- When transporting the TV, keep the TV upright, never turn the TV on its side or tilt towards the left or right.
- Do not apply excessive pressure to cause flexing /bending of frame chassis as it may damage screen.
- When handling the TV, be careful not to damage the protruding buttons.

CAUTION

- Avoid touching the screen at all times, as this may result in damage to the screen.
- Do not move the TV by holding the cable holders, as the cable holders may break, and injuries and damage to the TV may occur.

Using the button

You can simply operate the TV functions, pressing or moving the button.

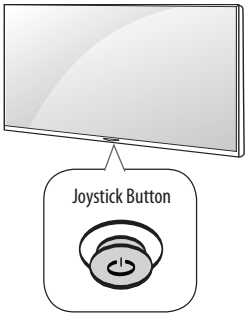

Basic functions

	Power On (Press) Power Off (Press and hold)[1]
	Volume Control
	Programmes Control

1 All running apps will close, and any recording in progress will stop.

Adjusting the menu

When the TV is turned on, press the ⏻ button one time. You can adjust the Menu items pressing or moving the buttons.

⏻	Turns the power off.
✕	Clears on-screen displays and returns to TV viewing.
	Changes the input source.
⚙	Accesses the settings menu.

Mounting on a table

1 Lift and tilt the TV into its upright position on a table.

- Leave a 10 cm (minimum) space from the wall for proper ventilation.

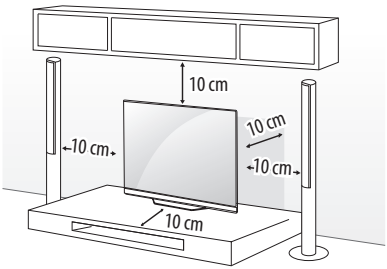

2 Connect the power cord to a wall outlet.

⚠ CAUTION

- Do not place the TV near or on sources of heat, as this may result in fire or other damage.

⚠ WARNING

- If a television is not positioned in a sufficiently stable location, it can be potentially hazardous due to falling. Many injuries, particularly to children, can be avoided by taking simple precautions such as:
  - » Using cabinets or stands recommended by the manufacturer of the television.
  - » Only using furniture that can safely support the television.
  - » Ensuring the television is not overhanging the edge of the supporting furniture.
  - » Not placing the television on tall furniture (for example, cupboards or bookcases) without anchoring both the furniture and the television to a suitable support.
  - » Not standing the televisions on cloth or other materials placed between the television and supporting furniture.
  - » Educating children about the dangers of climbing on furniture to reach the television or its controls.

Securing the TV to a wall

(This feature is not available for all models.)

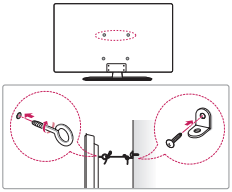

1 Insert and tighten the eye-bolts, or TV brackets and bolts on the back of the TV.

- If there are bolts inserted at the eye-bolts position, remove the bolts first.

2 Mount the wall brackets with the bolts to the wall.
Match the location of the wall bracket and the eye-bolts on the rear of the TV.

3 Connect the eye-bolts and wall brackets tightly with a sturdy rope. Make sure to keep the rope horizontal with the flat surface.

⚠ CAUTION

- Make sure that children do not climb on or hang on the TV.

NOTE

- Use a platform or cabinet that is strong and large enough to support the TV securely.
- Brackets, bolts and ropes are not provided. You can obtain additional accessories from your local dealer.

Mounting on a wall

Attach an optional wall mount bracket at the rear of the TV carefully and install the wall mount bracket on a solid wall perpendicular to the floor. When you attach the TV to other building materials, please contact qualified personnel. LG recommends that wall mounting be performed by a qualified professional installer. We recommend the use of LG's wall mount bracket. LG's wall mount bracket is easy to move with cables connected. When you do not use LG's wall mount bracket, please use a wall mount bracket where the device is adequately secured to the wall with enough space to allow connectivity to external devices. It is advised to connect all the cables before installing fixed wall mounts.

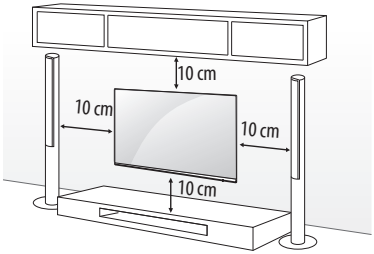

Make sure to use screws and wall mount bracket that meet the VESA standard. Standard dimensions for the wall mount kits are described in the following table.

Separate purchase (Wall mounting bracket)

Model	55/65EW96**
VESA (A x B) (mm)	300 x 200
Standard screw	M6
Number of screws	4
Wall mount bracket	OTW420B

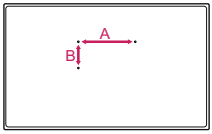

CAUTION

- Remove the stand before installing the TV on a wall mount by performing the stand attachment in reverse.

Connections (notifications)

Connect various external devices to the TV and switch input modes to select an external device. For more information of external device's connection, refer to the manual provided with each device.

Available external devices are: HD receivers, DVD players, VCRs, audio systems, USB storage devices, PC, gaming devices, and other external devices.

NOTE

- The external device connection may differ from the model.
- Connect external devices to the TV regardless of the order of the TV port.
- If you record a TV program on a DVD recorder or VCR, make sure to connect the TV signal input cable to the TV through a DVD recorder or VCR. For more information of recording, refer to the manual provided with the connected device.
- Refer to the external equipment's manual for operating instructions.
- If you connect a gaming device to the TV, use the cable supplied with the gaming device.
- In PC mode, there may be noise associated with the resolution, vertical pattern, contrast or brightness. If noise is present, change the PC output to another resolution, change the refresh rate to another rate or adjust the brightness and contrast on the PICTURE menu until the picture is clear.
- In PC mode, some resolution settings may not work properly depending on the graphics card.
- If ULTRA HD content is played on your PC, video or audio may become disrupted intermittently depending on your PC's performance. (Depending on model)

Antenna connection

Connect the TV to a wall antenna socket with an RF cable (75 Ω).

- Use a signal splitter to use more than 2 TVs.
- If the image quality is poor, install a signal amplifier properly to improve the image quality.
- If the image quality is poor with an antenna connected, try to realign the antenna in the correct direction.
- An antenna cable and converter are not supplied.
- Supported DTV Audio: MPEG, Dolby Digital, Dolby Digital Plus, HE-AAC
- For a location that is not supported with ULTRA HD broadcasting, this TV cannot receive ULTRA HD broadcasts directly. This TV cannot receive ULTRA HD (3840 x 2160 pixels) broadcasts directly because the related standards have not been confirmed. (Depending on model)

Satellite dish connection

(Only satellite models)

Connect the TV to a satellite dish to a satellite socket with a satellite RF cable (75 Ω).

CI module connection

(Depending on model)

View the encrypted (pay) services in digital TV mode.

- Check if the CI module is inserted into the PCMCIA card slot in the right direction. If the module is not inserted properly, this can cause damage to the TV and the PCMCIA card slot.
- If the TV does not display any video and audio when CI+ CAM is connected, please contact to the Terrestrial/Cable/Satellite Service Operator.

USB connection

Some USB Hubs may not work. If a USB device connected using a USB Hub is not detected, connect it to the USB port on the TV directly.

Speaker Output Setup

(Depending on model)

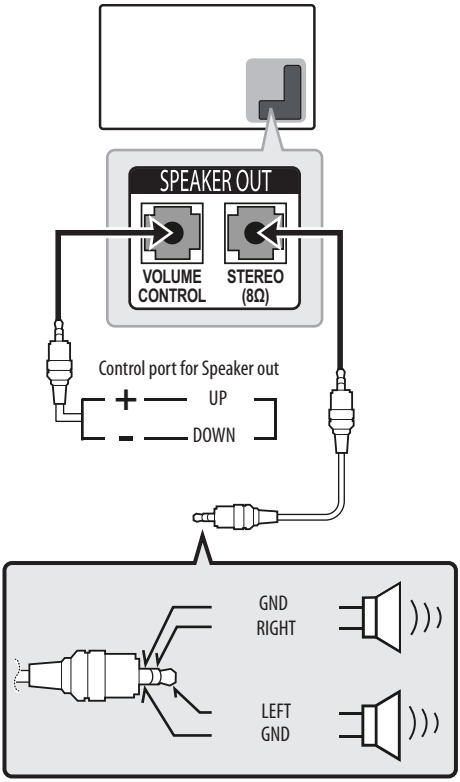

NOTE

- Use only with the 3 Pole 3.5mm Stereo Jack.
- Do not connect your headphones or earphones to the port for connecting an external speaker.

Method of Volume control port

- Cable Spec.

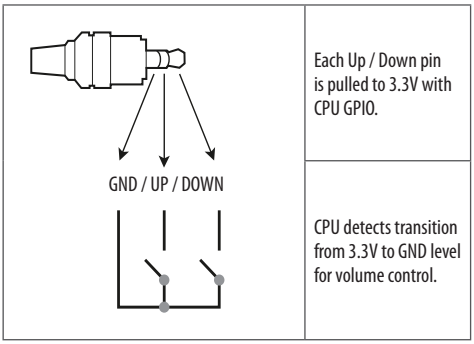

Network Setup

Wired network connection

(Depending on model)

This TV can be connected to a Pro:Centric server via the LAN port. After making the physical connection, the TV needs to be set up for network communication.

Connect the **LAN** port of the Modem or Router from Pro:Centric server to the **LAN** port on the TV.

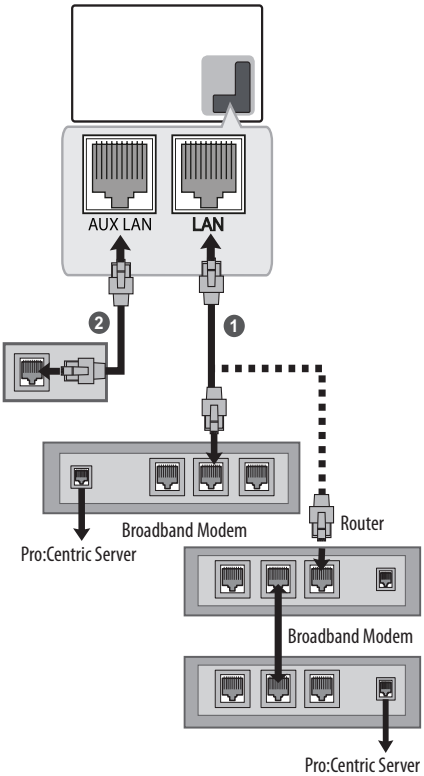

1 Connect the **LAN** port of the Modem or Router to the **LAN** port on the TV.

2 Connect the **LAN** port of the PC to the **AUX LAN** port on the TV.

⚠ CAUTION

- Do not connect a modular phone cable to the **LAN** port.
- Since there are various connection methods, please follow the specifications of your telecommunication carrier or internet service provider.

Other connections

Connect your TV to external devices. For the best picture and audio quality, connect the external device and the TV with the HDMI cable. Some separate cable is not provided.

- **SMART** → ⚙ → ⋮ → **General** → **HDMI ULTRA HD Deep Colour**
  - **On** : Support 4K @ 50/60 Hz (4:4:4, 4:2:2, 4:2:0)
  - **Off** : Support 4K @ 50/60 Hz 8 bit (4:2:0)

  If the device connected to Input Port also supports ULTRA HD Deep Colour, your picture may be clearer. However, if the device doesn't support it, it may not work properly. In that case, connect the device to a different HDMI port or change the TV's **HDMI ULTRA HD Deep Colour** setting to **Off**.
  (This feature is available on certain models which are supported ULTRA HD Deep Colour only.)

Remote control

(Depending on model)

The descriptions in this manual are based on the buttons on the remote control. Please read this manual carefully and use the TV correctly.

To replace batteries, open the battery cover, replace batteries (1.5 V AAA) matching the ⊕ and ⊖ ends to the label inside the compartment, and close the battery cover. To remove the batteries, perform the installation actions in reverse.

⚠ CAUTION

- In Analogue TV and some countries, some remote control buttons may not work.
- The remote control will not be included for all sales market.

Make sure to point the remote control toward the remote control sensor on the TV.

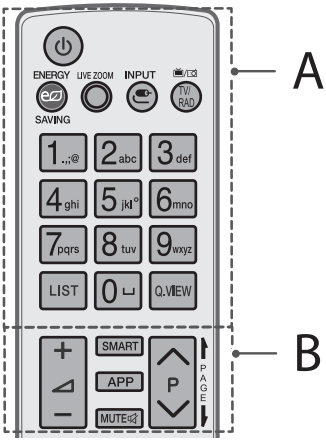

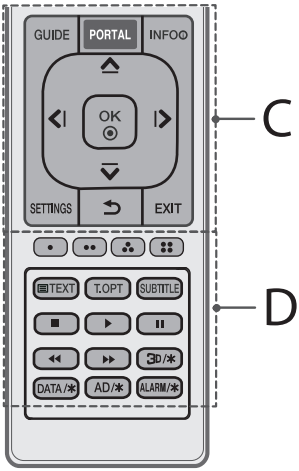

A

(POWER) Turns the TV on or off.
ENERGY SAVING Adjusts the brightness of the screen to reduce energy consumption.
LIVE ZOOM By zooming in on the selected area, you can view it in full screen.
INPUT Changes the input source.
TV/RAD Selects Radio, TV and DTV programme.
Number buttons Enters numbers.
LIST Accesses the saved programme list.
(Space) Opens an empty space on the screen keyboard.
Q.VIEW Returns to the previously viewed programme.

B

+ − Adjusts the volume level.
SMART Accesses the Home menu.
APP Shows the previous history.
MUTE Mutes all sounds.
P Scrolls through the saved programmes.
PAGE Moves to the previous or next screen.

C

GUIDE Shows programme guide.
PORTAL Displays and removes hotel interactive menu.
INFO Views the information of the current programme and screen.
Navigation buttons (up/down/left/right) Scrolls through menus or options.
OK Selects menus or options and confirms your input.
SETTINGS Accesses the Quick Settings.
(BACK) Returns to the previous level.
EXIT Clears on-screen displays and return to TV viewing.

D

, These access special functions in some menus.
Teletext buttons (TEXT / T.OPT) These are used for teletext.
SUBTITLE Recalls your preferred subtitle in digital mode.
Control buttons (■, ▶, ❚❚, ◀◀, ▶▶) Controls media contents.
3D/ Used for viewing 3D video. (depending on model)
DATA/ Selects the MHP TV menu source. (depending on model)
AD/ By pressing the AD button, audio descriptions function will be enabled. (depending on model)
ALARM / Sets the alarm function. (depending on model)

Licenses

Supported licenses may differ by model. For more information about licenses, visit *www.lg.com*.

Manufactured under license from Dolby Laboratories. Dolby and the double-D symbol are trademarks of Dolby Laboratories.

The terms HDMI and HDMI High-Definition Multimedia interface, and the HDMI logo are trademarks or registered trademarks of HDMI Licensing LLC in the United States and other countries.

For DTS patents, see *http://patents.dts.com*. Manufactured under license from DTS Licensing Limited. DTS, DTS-HD, the Symbol, & DTS or DTS-HD and the Symbol together are registered trademarks of DTS, Inc. © DTS, Inc. All Rights Reserved.

Open source software notice information

To obtain the source code under GPL, LGPL, MPL, and other open source licenses, that is contained in this product, please visit *http://opensource.lge.com*.

In addition to the source code, all referred license terms, warranty disclaimers and copyright notices are available for download.

LG Electronics will also provide open source code to you on CD-ROM for a charge covering the cost of performing such distribution (such as the cost of media, shipping, and handling) upon email request to opensource@lge.com. This offer is valid for three (3) years from the date on which you purchased the product.

Troubleshooting

The software version can be updated for improvement in performance. Customer needs to ensure the compatibility of customer's equipment with LGE software. If needed, please consult with LGE and upload revised software version according to the guidance provided by LGE.

Cannot control the TV with the remote control.

- Check the remote control sensor on the product and try again.
- Check if there is any obstacle between the product and the remote control.
- Check if the batteries are still working and properly installed (⊕ to ⊕, ⊖ to ⊖).

No image display and no sound is produced.

- Check if the product is turned on.
- Check if the power cord is connected to a wall outlet.
- Check if there is a problem in the wall outlet by connecting other products.

The TV turns off suddenly.

- Check the power control settings. The power supply may be interrupted.
- Check if the **Auto Power Off** (Depending on model) / **Sleep Timer** / **Timer Power Off** is activated in the **TIMERS** settings.
- If there is no signal while the TV is on, the TV will turn off automatically after 15 minutes of inactivity.

When connecting to the PC (HDMI), 'No signal' or 'Invalid Format' is displayed.

- Turn the TV off/on using the remote control.
- Reconnect the HDMI cable.
- Restart the PC with the TV on.

Specifications

Wireless module specification

- As band channels can vary per country, the user cannot change or adjust the operating frequency. This product is configured for the regional frequency table.
- For consideration of the user, this device should be installed and operated with a minimum distance of 20 cm between the device and the body.

Wireless module (LGSBWAC61) specifications	
Wireless LAN (IEEE 802.11a/b/g/n/ac)	
Frequency Range	Output Power (Max.)
2400 to 2483.5 MHz 5150 to 5725 MHz 5725 to 5850 MHz (Not for EU)	15.5 dBm 17.5 dBm 8.0 dBm
Bluetooth	
Frequency Range	Output Power (Max.)
2400 to 2483.5 MHz	10 dBm

* "IEEE802.11ac" is not available in all countries.

CI Module (W x H x D)[1]		100.0 mm x 55.0 mm x 5.0 mm
Environment condition	**Operating Temperature**	0 ℃ to 40 ℃
	Operating Humidity	Less than 80 %
	Storage Temperature	-20 ℃ to 60 ℃
	Storage Humidity	Less than 85 %

1 Depending on model

	Digital TV (Depending on Country)	**Analogue TV (Depending on Country)**
Television system	DVB-T/T2[1] DVB-T/T2/C/S/S2[2]	PAL B/B, PAL B/G, PAL D/K, PAL-I SECAM B/G, SECAM D/K NTSC-M
Programme coverage	VHF, UHF C-Band[2], Ku-Band[2]	VHF, UHF, CATV
Maximum number of storable programmes	DVB-T/T2 & Analogue TV : 3,000 DVB-S/S2 : 6,000	
External antenna impedance	75 Ω	

1 Only DVB-T2 support models.

2 Only DVB-T2/C/S2 support models.

HDMI-DTV supported mode

Resolution	Horizontal Frequency (kHz)	Vertical Frequency (Hz)
720 x 480	31.47 31.50	59.94 60.00
720 x 576	31.25	50.00
1280 x 720	44.96 45.00 37.50	59.94 60.00 50.00
1920 x 1080	28.12 33.72 33.75 26.97 27.00 33.71 33.75 56.25 67.43 67.50	50.00 59.94 60.00 23.97 24.00 29.97 30.00 50.00 59.94 60.00
3840 x 2160	53.95 54.00 56.25 61.43 67.50 112.50 135.00 135.00	23.98 24.00 25.00 29.97 30.00 50.00 59.94 60.00
4096 x 2160	53.95 54.00 56.25 61.43 67.50 112.50 135.00 135.00	23.98 24.00 25.00 29.97 30.00 50.00 59.94 60.00

HDMI-PC supported mode

Resolution	Horizontal Frequency (kHz)	Vertical Frequency (Hz)
640 x 350	31.46	70.09
720 x 400	31.46	70.08
640 x 480	31.46	59.94
800 x 600	37.87	60.31
1024 x 768	48.36	60.00
1152 x 864	54.34	60.05
1280 x 1024	63.98	60.02
1360 x 768	47.71	60.01
1920 x 1080	67.50	60.00
3840 x 2160	67.50 56.25 54.00	30.00 25.00 24.00
4096 x 2160	53.95 54.00	23.97 24.00

NOTE

- The optimal display resolution
  - 3840 x 2160

Component port connecting information

Component ports on the TV	Y	P_B	P_R

Video output ports on DVD player	Y	P_B	P_R
	Y	B-Y	R-Y
	Y	Cb	Cr
	Y	Pb	Pr

Signal	Component
480i/576i	O
480p/576p	O
720p/1080i	O
1080p	O (50 Hz / 60 Hz only)

Photo format

File Format	Format	Resolution
.jpeg, .jpg, .jpe	JPEG	Minimum: 64 (W) x 64 (H) Maximum(Normal Type): 15360 (W) x 8640 (H) Maximum (Progressive Type): 1920 (W) x 1440 (H)
.png	PNG	Minimum: 64 x 64 Maximum: 5760 (W) x 5760 (H)
.bmp	BMP	Minimum: 64 x 64 Maximum: 1920 (W) x 1080 (H)

Audio format

File Format	Item	Info
.mp3	Bit rate	32 Kbps - 320 Kbps
	Sample freq.	16 kHz - 48 kHz
	Support	MPEG1, MPEG2
	Channels	Mono, stereo
.wav	Bit rate	-
	Sample freq.	8 kHz ~ 48 kHz
	Support	PCM
	Channels	Mono, stereo
.ogg	Bit rate	64 Kbps ~ 320 Kbps
	Sample freq.	8 kHz - 48 kHz
	Support	Vorbis
	Channels	Mono, stereo
.wma	Bit rate	128 Kbps ~ 320 Kbps
	Sample freq.	8 kHz ~ 48 kHz
	Support	WMA
	Channels	up to 6 ch

- The number of supported programmes may vary depending on the sample frequency.

Video codec

Extension	Codec	
.asf .wmv	Video	VC-1 Advanced Profile (WMVA excluded), VC-1 Simple and Main Profiles
	Audio	WMA Standard (WMA v1/WMA Speech excluded)
.avi	Video	XViD(except 3 warp-point GMC), H.264/AVC, Motion Jpeg, MPEG-4
	Audio	MPEG-1 Layer I, II, MPEG-1 Layer III (MP3), Dolby Digital, LPCM, ADPCM, DTS
.mp4 .m4v .mov	Video	H.264/AVC, MPEG-4, HEVC
	Audio	Dolby Digital, Dolby Digital Plus, AAC, MPEG-1 Layer III (MP3)
.3gp .3g2	Video	H.264/AVC, MPEG-4
	Audio	AAC, AMR-NB, AMR-WB
.mkv	Video	MPEG-2, MPEG-4, H.264/AVC, VP8, VP9, HEVC
	Audio	Dolby Digital, Dolby Digital Plus, AAC, PCM, DTS, MPEG-1 Layer I, II, MPEG-1 Layer III (MP3)
.ts .trp .tp .mts	Video	H.264/AVC, MPEG-2, HEVC
	Audio	MPEG-1 Layer I, II, MPEG-1 Layer III (MP3), Dolby Digital, Dolby Digital Plus, AAC, PCM
.mpg .mpeg .dat	Video	MPEG-1, MPEG-2
	Audio	MPEG-1 Layer I, II, MPEG-1 Layer III (MP3)
.vob	Video	MPEG-1, MPEG-2
	Audio	Dolby Digital, MPEG-1 Layer I, II, DVD-LPCM
.mkv .mp4 .ts	Video	H.264/AVC, H.265(HEVC)
	Audio	Dolby Digital, Dolby Digital Plus, AAC
	• The optimal display resolution : 3840 x 2160	
.rm .rmvb	Video	RV30, RV40
	Audio	Realaudio6(cook), AAC LC, HE-AAC
	• This feature is available in certain countries only.	

Record the model number and serial number of the TV. Refer to the label on the back cover and quote this information to your dealer when requiring any service.

MODEL _____

SERIAL _____

IR CODES

- This feature is not available for all models.

Code (Hexa)	Function	Note
08	(POWER)	Remote control Button (Power On/Off)
95	ENERGY SAVING	Remote control Button
AF	LIVE ZOOM	Remote control Button
B5	APP	Remote control Button
0B	INPUT	Remote control Button
F0	TV/RAD	Remote control Button
10-19	Number Key 0-9	Remote control Button
53	LIST	Remote control Button
1A	Q.VIEW	Remote control Button
02	+	Remote control Button
7C	SMART	Remote control Button
00	P / PAGE	Remote control Button
03	−	Remote control Button
09	MUTE	Remote control Button
01	P / PAGE	Remote control Button
AB	GUIDE	Remote control Button
0C	PORTAL	Remote control Button
AA	INFO	Remote control Button
40	^	Remote control Button
07	<	Remote control Button
44	OK	Remote control Button
06	>	Remote control Button
41	v	Remote control Button

Code (Hexa)	Function	Note
43	SETTINGS	Remote control Button
28	(BACK)	Remote control Button
5B	EXIT	Remote control Button
72	RED	Remote control Button
71	GREEN	Remote control Button
63	YELLOW	Remote control Button
61	BLUE	Remote control Button
20	TEXT	Remote control Button
21	T.OPT (T.Option)	Remote control Button
39	SUBTITLE	Remote control Button
B1	■	Remote control Button
B0	▶	Remote control Button
BA	II	Remote control Button
8F	◀◀	Remote control Button
8E	▶▶	Remote control Button
DC	3D/*	Remote control Button
9F	DATA /*	Remote control Button
91	AD /*	Remote control Button
E8	ALARM /*	Remote control Button

ENGLISH

EXTERNAL CONTROL DEVICE SETUP

RS-232C Setup

- Image shown may differ from your TV.

Connect the RS-232C (serial port) input jack to an external control device (such as a computer or an A/V control system) to control the product's functions externally.

Connect the serial port of the control device to the RS-232C jack on the product back panel.

NOTE

- RS-232C connection cables are not supplied with the product.

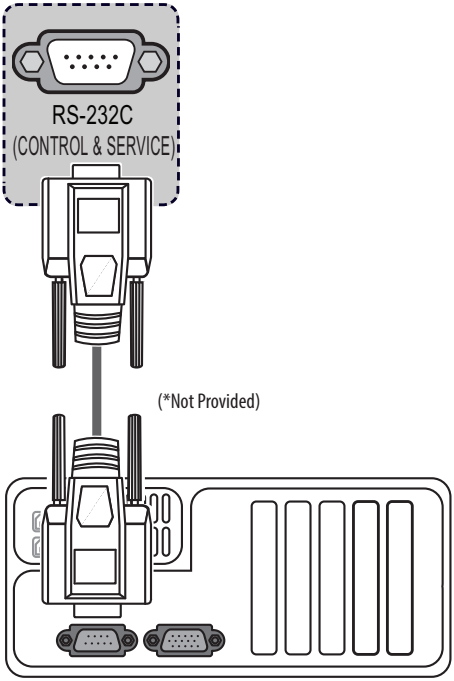

Type of Connector : D-Sub 9-Pin Male

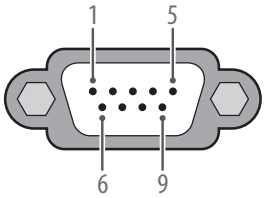

No.	Pin name
1	3.5 V
2	RXD (Receive data)
3	TXD (Transmit data)
4	IR OUT from TV
5	GND
6	No Connection
7	5 V
8	No Connection
9	12 V

RS-232C Configurations

7-Wire Configurations (Standard RS-232C cable)

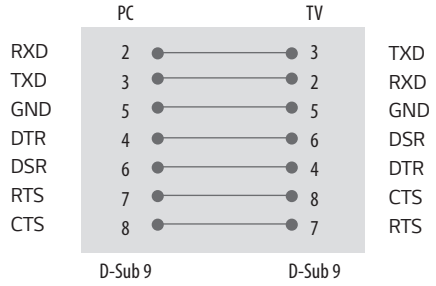

3-Wire Configurations (Not standard)

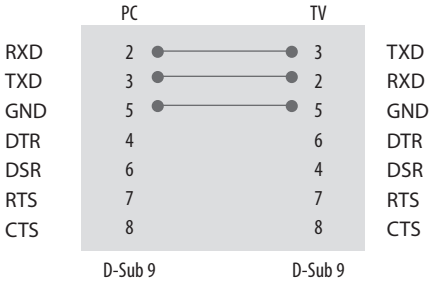

Set ID

Set ID number. "**Real Data Mapping**".

1. Press **SETTINGS** or **SMART** to access the main menus.
2. Press the Navigation buttons to scroll to **General** and press **OK**.
3. Press the Navigation buttons to scroll to **Set ID** and press **OK**.
4. Scroll left or right to select a set ID number and press **OK**. The adjustment range is 1-99.
5. When you are finished, press **EXIT**.

Communication Parameters

- Baud rate: 9600 bps (UART)
- Data length: 8 bits
- Parity : None
- Stop bit: 1 bit
- Communication code: ASCII code
- Use a crossed (reverse) cable.

Command Reference List

(Depending on Model)

	COMMAND1	COMMAND2	DATA (Hexadecimal)
01. Power	k	a	00 to 01
02. Aspect Ratio	k	c	(See p. 4)
03. Screen Mute	k	d	(See p. 5)
04. Volume Mute	k	e	00 to 01
05. Volume Control	k	f	00 to 64
06. Contrast	k	g	00 to 64
07. Brightness	k	h	00 to 64
08. Colour	k	i	00 to 64
09. Tint	k	j	00 to 64
10. Sharpness	k	k	00 to 32
11. OSD Select	k	l	00 to 01
12. Remote Control Lock Mode	k	m	00 to 01
13. Balance	k	t	00 to 64
14. Colour Temperature	x	u	00 to 64
15. Energy Saving	j	q	(See p. 7)
16. Auto Configu-ration	j	u	01
17. Equalize	j	v	(See p. 7)
18. Tune Com-mand	m	a	(See p. 8)
19. Programme Add/Skip	m	b	00 to 01
20. Key	m	c	(See p. 8)
21. Control Back Light	m	g	00 to 64
22. Input select (Main)	x	b	(See p. 8)

NOTE

- During USB operations such as DivX or EMF, all commands except Power(ka) and Key(mc) are not executed and treated as NG.

Transmission / Receiving Protocol

(Depending on Model)

Transmission

[Command1][Command2][ ][Set ID][ ][Data][Cr]

[Command 1] : First command to control the TV.(j, k, m or x)

[Command 2] : Second command to control the TV.

[Set ID] : You can adjust the set ID to choose desired monitor ID number in option menu. Adjustment range is 1 to 99. When selecting Set ID '0', every connected set is controlled. Set ID is indicated as decimal (1 to 99) on menu and as Hexa decimal (0x0 to 0x63) on transmission/receiving protocol.

[Data] : To transmit command data.Transmit 'FF' data to read status of command.

[Cr] : Carriage Return
ASCII code '0x0D'

[ ] : ASCII code 'space (0x20)'

OK Acknowledgement

[Command2][ ][Set ID][ ][OK][Data][x]

* The set transmits ACK (acknowledgement) based on this format when receiving normal data. At this time, if the data is data read mode, it indicates present status data. If the data is data write mode, it returns the data of the PC computer.

Error Acknowledgement

[Command2][ ][Set ID][ ][NG][Data][x]

* The set transmits ACK (acknowledgement) based on this format when receiving abnormal data from non-viable functions or communication errors.

Data 00 : Illegal Code

01. Power (Command: k a)

▶ To control Power On/Off of the set.

Transmission
[k][a][ ][Set ID][ ][Data][Cr]

Data 00 : Power Off
01 : Power On

Ack
[a][ ][Set ID][ ][OK/NG][Data][x]

▶ To Show TV is Power On/Off.

Transmission
[k][a][ ][Set ID][ ][FF][Cr]

Ack
[a][ ][Set ID][ ][OK/NG][Data][x]

* Similarly, if other functions transmit '0xFF' data based on this format, Acknowledgement data feed back presents status about each function.
* OK Ack., Error Ack. and other message may display on the screen when TV is power On.

02. Aspect Ratio (Command: k c)
(Main Picture Size)

▶ To adjust the screen format. (Main picture format) You can also adjust the screen format using the Aspect Ratio in the PICTURE menu.

Transmission
[k][c][ ][Set ID][ ][Data][Cr]

Data 01 : Normal screen (4:3)
(Just Scan Off)
02 : Wide screen (16:9)
(Just Scan Off)
09 : Just Scan
06 : Original (Just Scan Off)

Ack
[c][ ][Set ID][ ][OK/NG][Data][x]

* Using the PC input, you select either 16:9 or 4:3 screen aspect ratio.

03. Screen Mute (Command: k d)

▶ To select screen mute on/off.

Transmission
[k][d][ ][Set ID][ ][Data][Cr]

Data 00 : Screen mute off (Picture on)
Video mute off
01 : Screen mute on (Picture off)
10 : Video mute on

Ack
[d][ ][Set ID][ ][OK/NG][Data][x]

* In case of video mute on only, TV will display On Screen Display(OSD). But, in case of Screen mute on, TV will not display OSD.

04. Volume Mute (Command: k e)

▶ To control volume mute on/off.
You can also adjust mute using the MUTE button on remote control.

Transmission
[k][e][ ][Set ID][ ][Data][Cr]

Data 00 : Volume mute on (Volume off)
01 : Volume mute off (Volume on)

Ack
[e][ ][Set ID][ ][OK/NG][Data][x]

05. Volume Control (Command: k f)

▶ To adjust volume.
You can also adjust volume with the volume buttons on remote control.

Transmission
[k][f][ ][Set ID][ ][Data][Cr]

Data Min : 00 to Max : 64

* Refer to Real data mapping.

Ack
[f][ ][Set ID][ ][OK/NG][Data][x]

06. Contrast (Command: k g)

▶ To adjust screen contrast.
You can also adjust contrast in the PICTURE menu.

Transmission
[k][g][ ][Set ID][ ][Data][Cr]

Data Min : 00 to Max : 64

* Refer to Real data mapping.

Ack
[g][ ][Set ID][ ][OK/NG][Data][x]

07. Brightness (Command: k h)

▶ To adjust screen brightness.
You can also adjust brightness in the PICTURE menu.

Transmission
[k][h][ ][Set ID][ ][Data][Cr]

Data Min : 00 to Max : 64

* Refer to Real data mapping.

Ack
[h][ ][Set ID][ ][OK/NG][Data][x]

08. Colour (Command: k i)

▶ To adjust the screen Colour.
You can also adjust colour in the PICTURE menu.

Transmission
[k][i][ ][Set ID][ ][Data][Cr]

Data Min : 00 to Max : 64

* Refer to Real data mapping.

Ack
[i][ ][Set ID][ ][OK/NG][Data][x]

09. Tint (Command: k j)

► To adjust the screen tint.
You can also adjust tint in the PICTURE menu.

Transmission
[k][j][ ][Set ID][ ][Data][Cr]

Data Red : 00 to Green : 64

* Refer to Real data mapping.

Ack
[j][ ][Set ID][ ][OK/NG][Data][x]

10. Sharpness (Command: k k)

► To adjust the screen sharpness.
You can also adjust sharpness in the PICTURE menu.

Transmission
[k][k][ ][Set ID][ ][Data][Cr]

Data Min : 00 to Max : 32

* Refer to Real data mapping.

Ack
[k][ ][Set ID][ ][OK/NG][Data][x]

11. OSD Select (Command: k l)

► To select OSD (On Screen Display) on/off when controlling remotely.

Transmission
[k][l][ ][Set ID][ ][Data][Cr]

Data 00 : OSD off 01 : OSD on

Ack
[l][ ][Set ID][ ][OK/NG][Data][x]

12. Remote control lock mode (Command: k m)

► To lock the front panel controls on the monitor and remote control.

Transmission
[k][m][ ][Set ID][ ][Data][Cr]

Data 00 : Lock off 01 : Lock on

Ack
[m][ ][Set ID][ ][OK/NG][Data][x]

* If you are not using the remote control, use this mode. When main power is on/off, external control lock is released.
* In the standby mode, if key lock is on, TV will not turn on by power on key of IR & Local Key.

13. Balance (Command: k t)

► To adjust balance.
You can also adjust balance in the AUDIO menu.

Transmission
[k][t][ ][Set ID][ ][Data][Cr]

Data L : 00 to R : 64

* Refer to Real data mapping.

Ack
[t][ ][Set ID][ ][OK/NG][Data][x]

14. Colour Temperature (Command: x u)

► To adjust colour temperature. You can also adjust Colour Temperature in the PICTURE menu.

Transmission
[x][u][ ][Set ID][ ][Data][Cr]

Data Warm: 00 to Cool:64

* Refer to Real data mapping.

Ack
[u][ ][Set ID][ ][OK/NG][Data][x]

15. Energy Saving (Command: j q)

► To reduce the power consumption of the TV. You can also adjust Energy Saving in PICTURE menu.

Transmission
[j][q][ ][Set ID][ ][Data][Cr]

Power Saving Function					Level				Description
7	6	5	4		3	2	1	0	
0	0	0	0	Low Power	0	0	0	0	Off
0	0	0	0	Low Power	0	0	0	1	Minimum
0	0	0	0	Low Power	0	0	1	0	Medium
0	0	0	0	Low Power	0	0	1	1	Maximum
0	0	0	0	Low Power	0	1	0	1	Screen Off
0	0	0	0	Low Power	0	1	0	0	Auto

► 'Auto' is available in TV that supports 'Intelligent Sensor'.

Ack
[q][ ][Set ID][ ][OK/NG][Data][x]

16. Auto Configuration (Command: j u) (Only RGB support model)

► To adjust picture position and minimize image shaking automatically. It works only in RGB (PC) mode.

Transmission
[j][u][ ][Set ID][ ][Data][Cr]

Data 01 : To set

Ack
[u][ ][Set ID][ ][OK/NG][Data][x]

17. Equalize (Command : j v)

► To adjust equalize.

Transmission
[j][v][ ][Set ID][ ][Data][Cr]

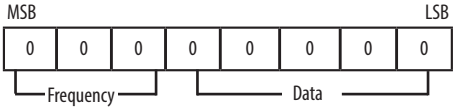

7	6	5	Frequency	4	3	2	1	0	Step
0	0	0	1st Band	0	0	0	0	0	0(decimal)
0	0	1	2nd Band	0	0	0	0	1	1(decimal)
0	1	0	3rd Band	...	...	...	...	...	...
0	1	1	4th Band	1	0	0	1	1	19(decimal)
1	0	0	5th Band	1	0	1	0	0	20(decimal)

Ack
[v][ ][Set ID][ ][OK/NG][Data][x]

18. Tune Command (Command: m a)

▶ Select channel to following physical number.

Transmission
[m][a][ ][Set ID][ ][Data 00][ ][Data 01][ ][Data 02][Cr]

Data 00 : High channel data

Data 01 : Low channel data
ex. No. 47 -> 00 2F (2FH)
No. 394 -> 01 8A (18AH),
DTV No. 0 -> Don't care

Data 02 : [Antenna]
0x00 : Analog Main
0x10 : DTV Main
0x20 : Radio

[Cable]
0x80 : Analog Main
0x90 : DTV Main
0xA0 : Radio

[Satellite]
0x40 : DTV Main
0x50 : Radio Main

Channel data range
Min: 00 Max: 270F (0 to 9999)

Ack
[a][ ][Set ID][ ][OK/NG][Data][x]

19. Programme Add/Skip (Command: m b)

▶ To set skip status for the current Programme.

Transmission
[m][b][ ][Set ID][ ][Data][Cr]

Data 00 : Skip 01 : Add

Ack
[b][ ][Set ID][ ][OK/NG][Data][x]

20. Key (Command: m c)

▶ To send IR remote key code.

Transmission
[m][c][ ][Set ID][ ][Data][Cr]

Data IR CODES

Ack
[c][ ][Set ID][ ][OK/NG][Data][x]

21. Control Back Light (Command: m g)

▶ To control the backlight.

Transmission
[m][g][ ][Set ID][ ][Data][Cr]

Data Min : 00 to Max : 64

Ack
[g][ ][Set ID][ ][OK/NG][Data][x]

22. Input select (Command: x b)
(Main Picture Input)

▶ To select input source for main picture.

Transmission
[x][b][ ][Set ID][ ][Data][Cr]

Data Structure

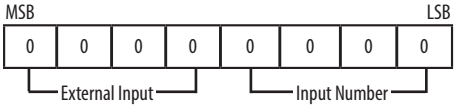

External Input				Data
0	0	0	0	DTV
0	0	0	1	Analogue
0	0	1	0	AV
0	1	0	0	Component
0	1	1	0	RGB
0	1	1	1	HDMI
1	0	0	0	
1	0	0	1	
1	0	1	0	

Input Number				Data
0	0	0	0	Input1
0	0	0	1	Input2
0	0	1	0	Input3
0	0	1	1	Input4

Ack

[b][ ][Set ID][ ][OK/NG][Data][x]

*** Real data mapping**

00 : Step 0

⋮

A : Step 10 (Set ID 10)

⋮

F : Step 15 (Set ID 15)

10 : Step 16 (Set ID 16)

⋮

64 : Step 100

⋮

6E : Step 110

⋮

73 : Step 115

74 : Step 116

⋮

CF : Step 199

⋮

FE : Step 254

FF : Step 255