LG

MFL72139707241 2REV00

OLED42C5* OLED65C5*
OLED48C5* OLED77C5*
OLED55C5* OLED83C5*

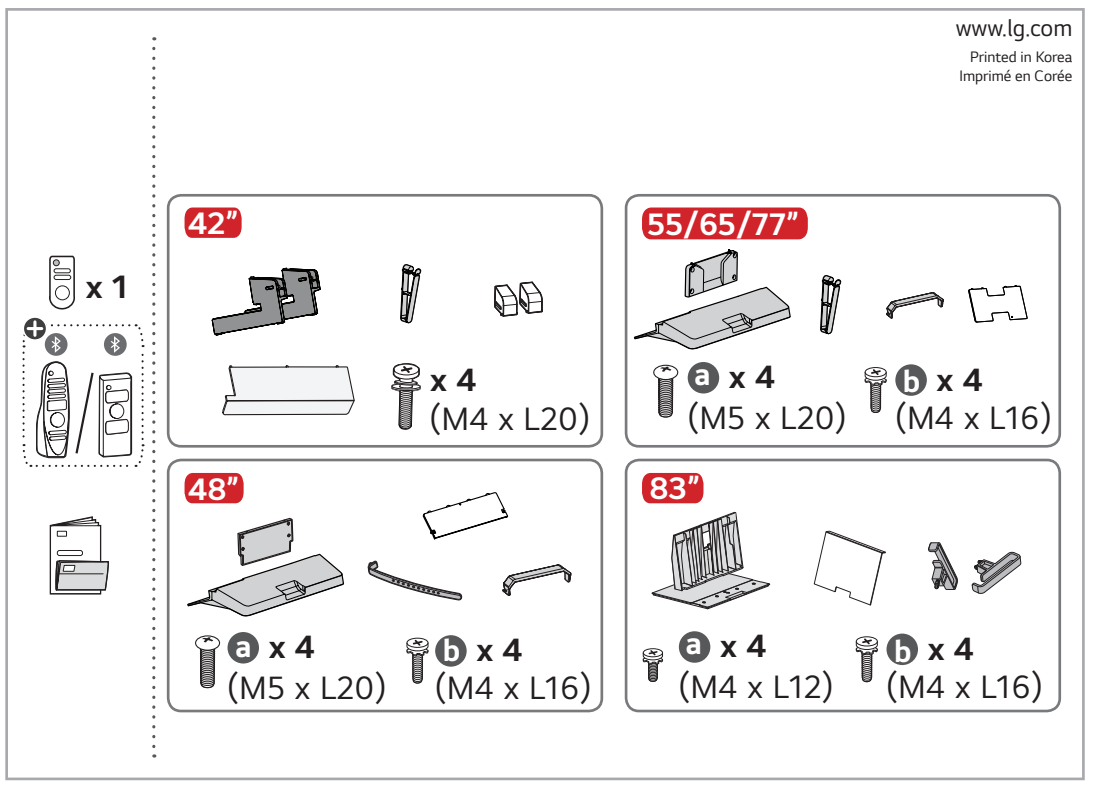

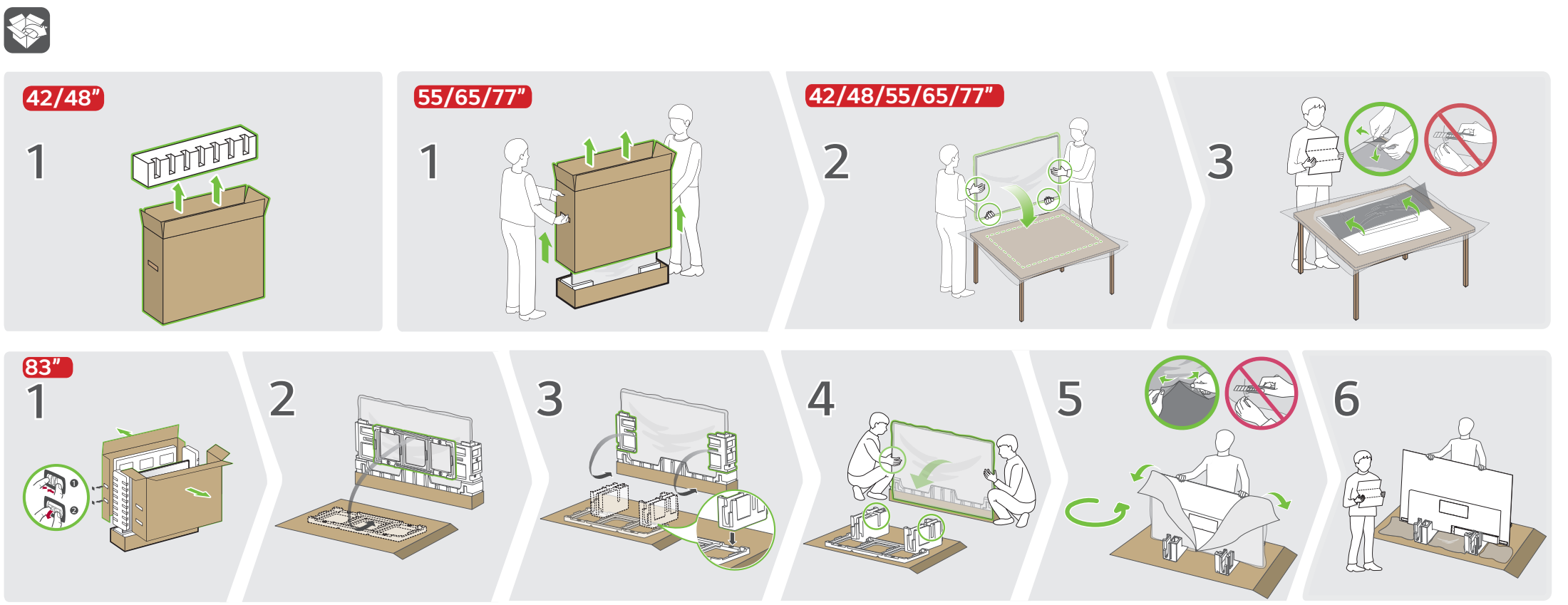

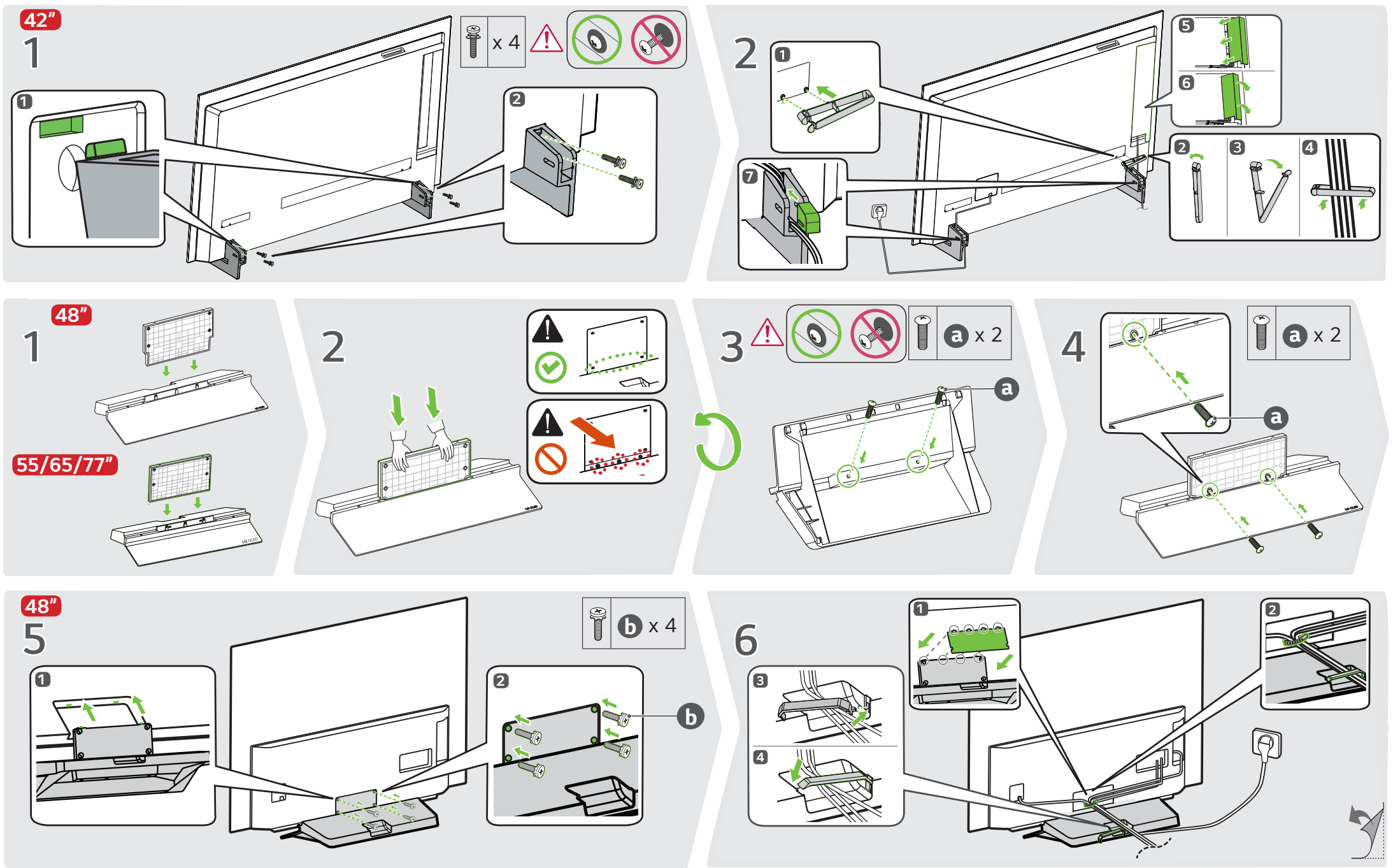

55/65/77”

5

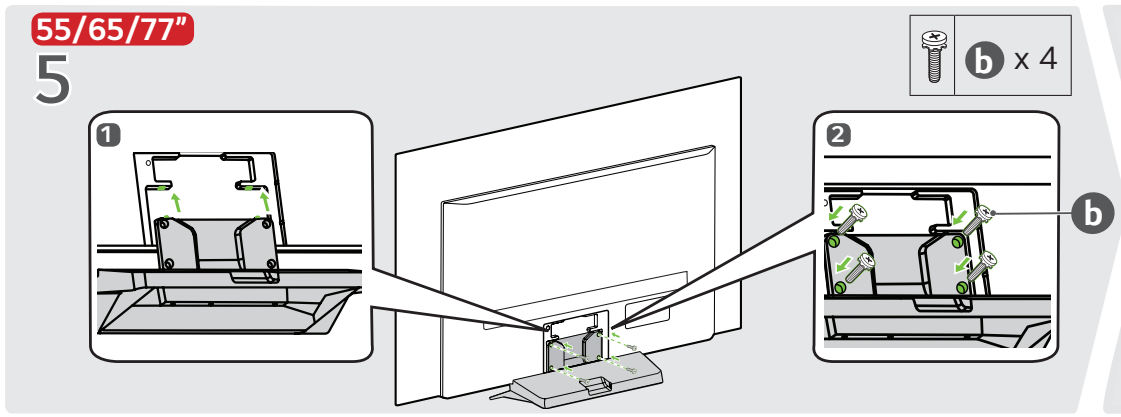

6

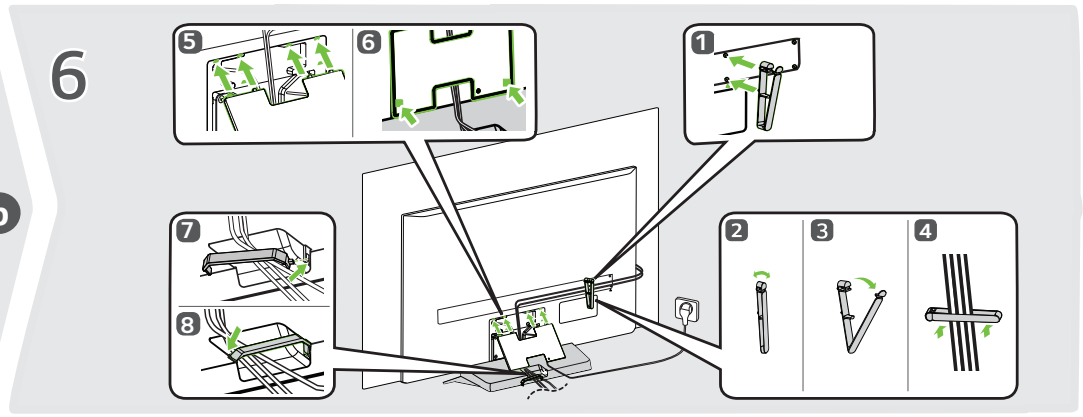

83”

1

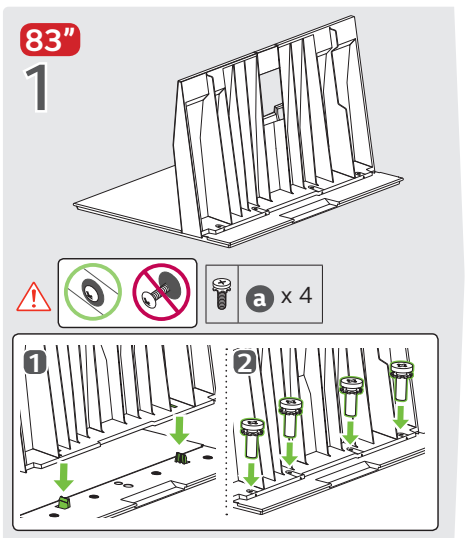

2

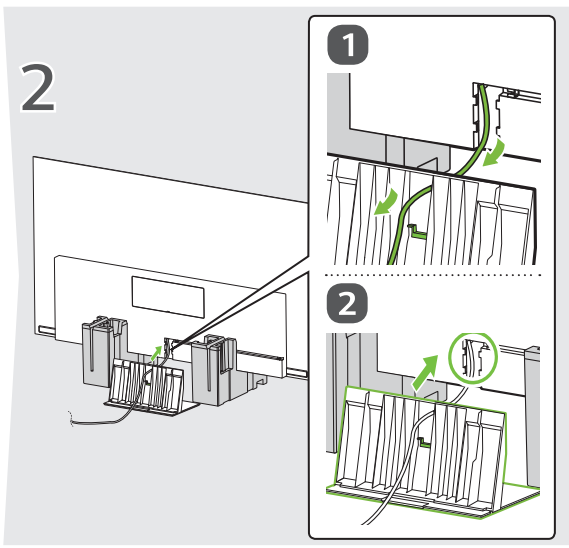

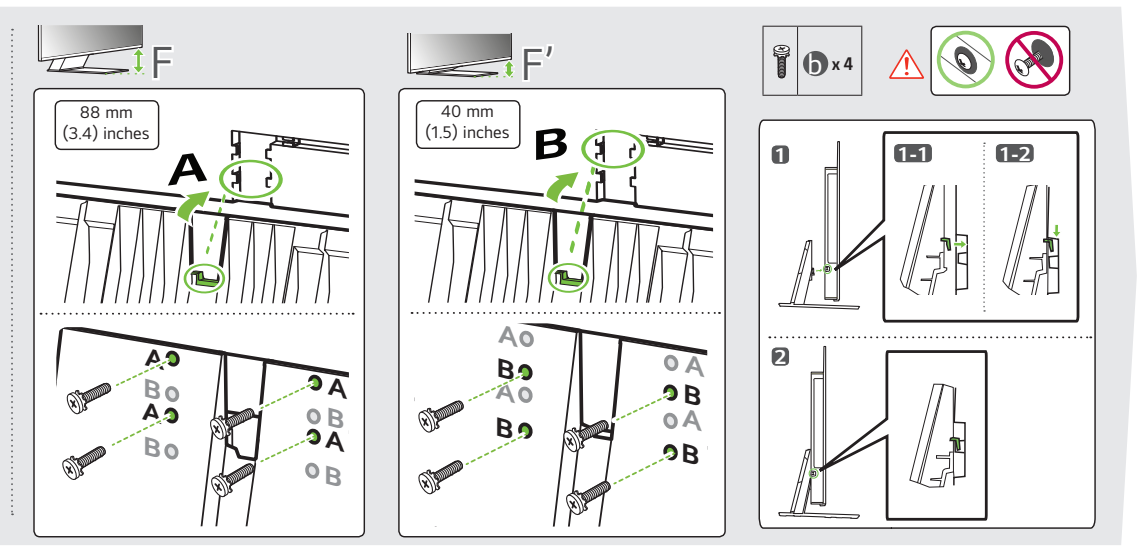

3

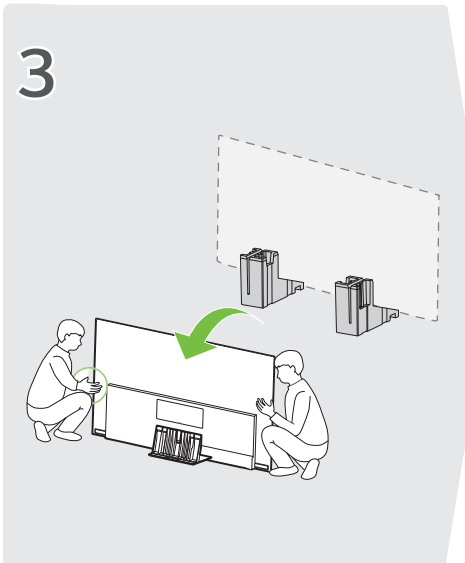

4

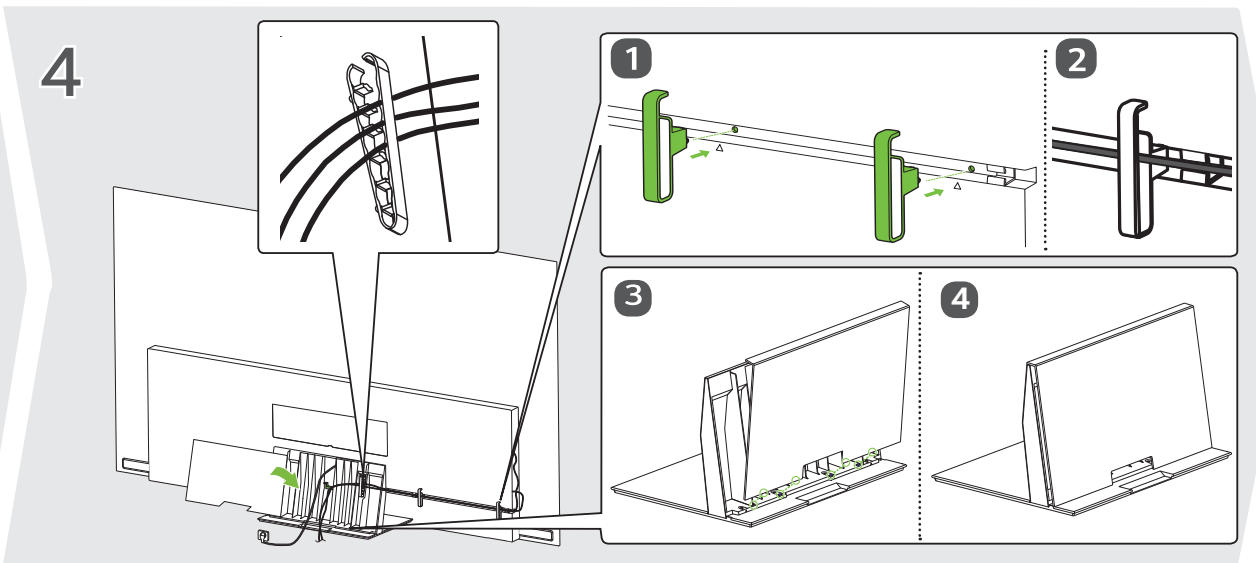

42/48/55/65/77/83”

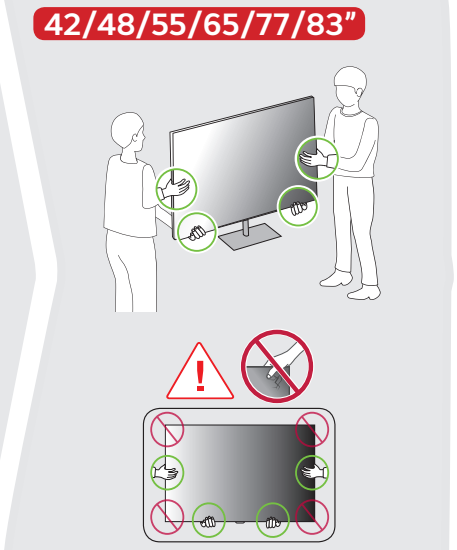

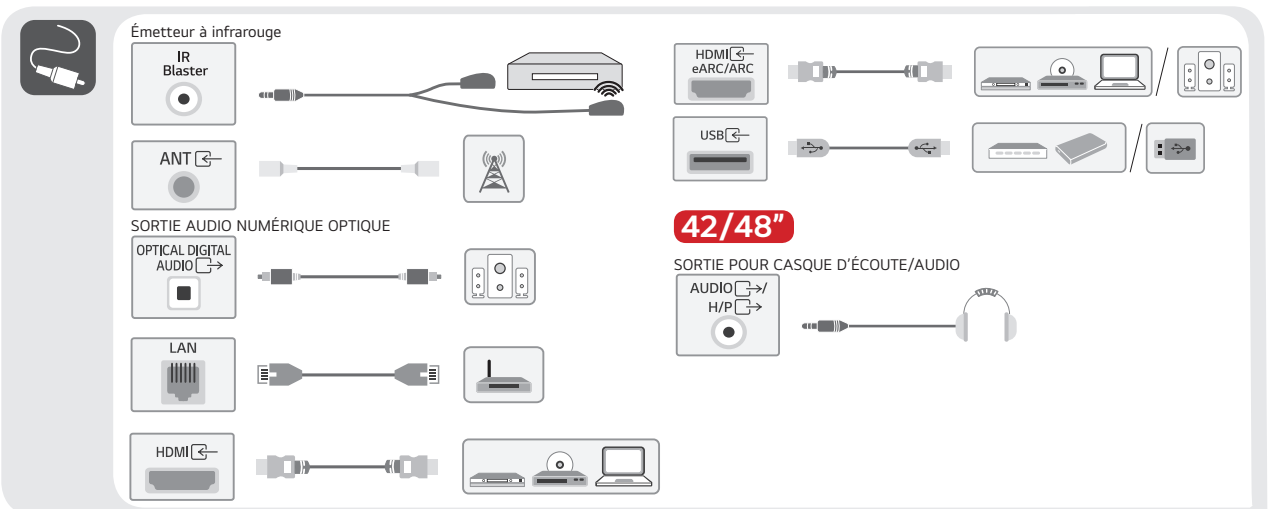

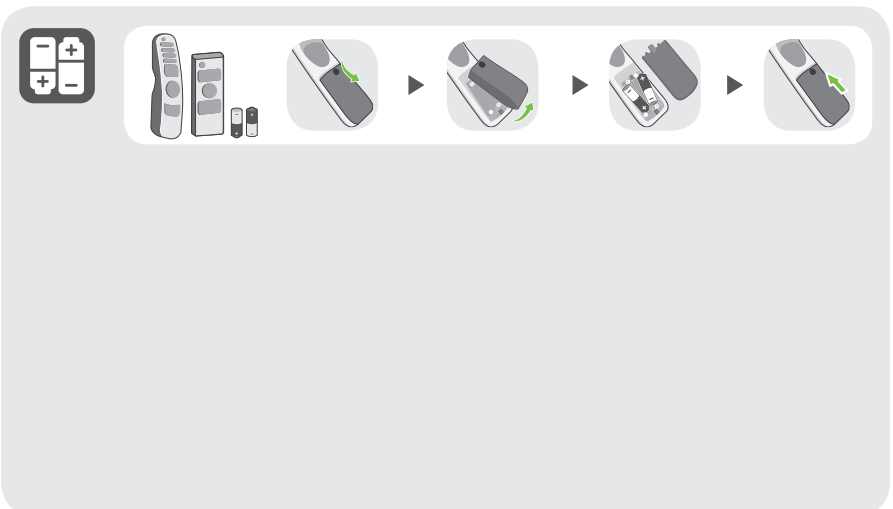

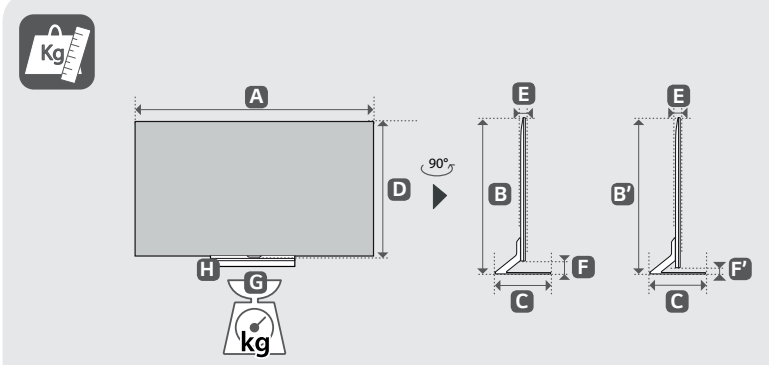

mm (inches / pulgadas / po)
kg (lbs / libras / lb)

	A	B	B’	C	D	E	F	F’	G	G - H	
OLED42C5*	932 mm (36.6) inches	577 mm (22.7) inches	-	170 mm (6.6) inches	540 mm (21.2) inches	41.1 mm (1.6) inches	37 mm (1.4) inches	-	10.1 kg (22.2) lbs	9.8 kg (21.6) lbs	175 W
OLED48C5*	1 071 mm (42.1) inches	675 mm (26.5) inches	-	230 mm (9.0) inches	618 mm (24.3) inches	46.9 mm (1.8) inches	57 mm (2.2) inches	-	16.8 kg (37.0) lbs	14.9 kg (32.8) lbs	223 W
OLED55C5*	1 222 mm (48.1) inches	757 mm (29.8) inches	-	230 mm (9.0) inches	703 mm (27.6) inches	45.1 mm (1.7) inches	54 mm (2.1) inches	-	16.0 kg (35.2) lbs	14.1 kg (31.0) lbs	338 W
OLED65C5*	1 441 mm (56.7) inches	880 mm (34.6) inches	-	230 mm (9.0) inches	826 mm (32.5) inches	45.1 mm (1.7) inches	54 mm (2.1) inches	-	18.5 kg (40.7) lbs	16.6 kg (36.5) lbs	452 W
OLED77C5*	1 711 mm (67.3) inches	1 035 mm (40.7) inches	-	267 mm (10.5) inches	982 mm (38.6) inches	47.1 mm (1.8) inches	53 mm (2.0) inches	-	27.1 kg (59.7) lbs	23.5 kg (51.8) lbs	648 W
OLED83C5*	1 842 mm (72.5) inches	1 144 mm (45.0) inches	1 096 mm (43.1) inches	297 mm (11.6) inches	1 055 mm (41.5) inches	52.9 mm (2.0) inches	88 mm (3.4) inches	40 mm (1.5) inches	33.0 kg (72.7) lbs	28.3 kg (62.3) lbs	700 W

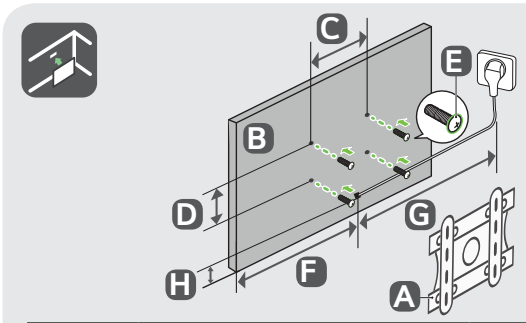

mm (inches / pulgadas / po)

A	B	C x D	E	F	G	H
OLW480B	**OLED42C5***	300 x 200 mm (11.8 x 7.8) inches	M6	263 mm (10.3) inches	≧1.5 m (59.0) inches	113 mm (4.4) inches
	OLED48C5*			126 mm (4.9) inches		118 mm (4.6) inches
	OLED55C5*			523 mm (20.5) inches		121 mm (4.7) inches
	OLED65C5*			633 mm (24.9) inches		121 mm (4.7) inches
	OLED77C5*			769 mm (30.2) inches		121 mm (4.7) inches
WB24GCB	**OLED83C5***	400 x 400 mm (15.7 x 15.7) inches		896 mm (35.2) inches		114 mm (4.4) inches

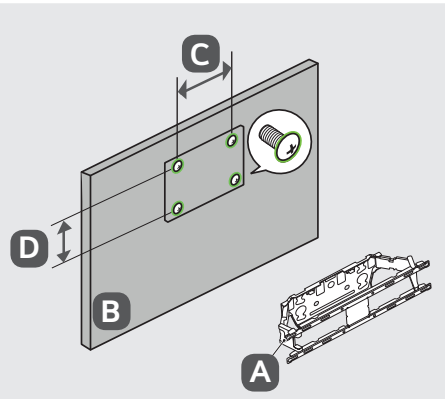

mm (inches / pulgadas / po)

A	B	C x D
WB21EB	**OLED83C5***	180 x 55 mm (7.0 x 2.1) inches

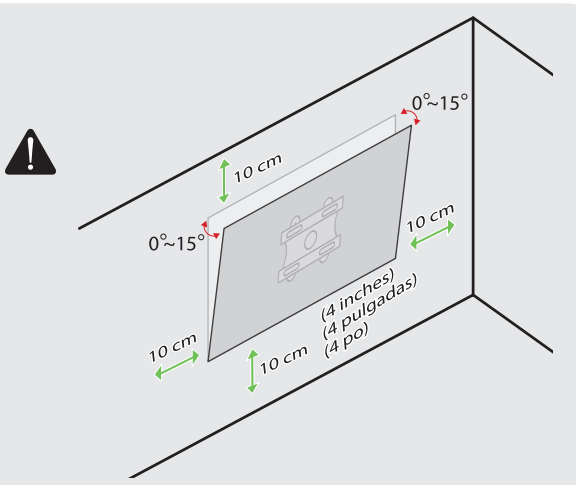

* : 0~9, A~Z