LG
Life's Good

MFL71382402

(1903-REV01)

UM75*
UM79*

www.lg.com

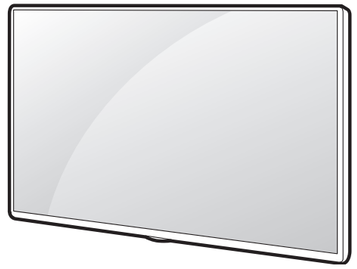



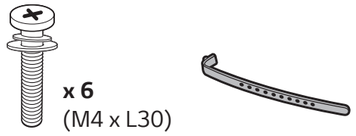

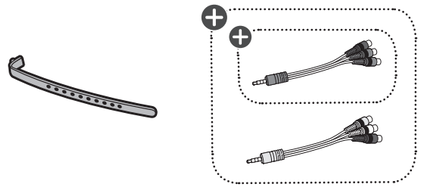

English

- Read **Safety and Reference.**
- For the power supply and power consumption, refer to the label attached to the product.

العربية

- قراءة **الأمان والمرجع.**
- لمعرفة المزيد حول مصدر الإمداد بالطاقة المطلوب ومعايير استهلاك الطاقة، راجع الملصق الموجود على المنتج.

Français

- Lire le document **Sécurité et référence.**
- Reportez-vous à l'étiquette apposée sur le téléviseur pour connaître l'alimentation et la consommation électrique.

Português

- Consulte o manual **Segurança e referência.**
- No que respeita à fonte de alimentação e ao consumo de energia, consulte a etiqueta mostrada no produto.

עברית

- יש לקרוא את **הוראות בטיחות, הפניות ואיזכורים.**
- לקבלת מידע לגבי אספקת המתח וצריכת החשמל, עיין בתווית שעל גבי המכשיר.

فارسی

- **موارد ایمنی و مرجع** را مطالعه نمایید.
- برای اطلاع از منبع تغذیه و مصرف برق، به برچسب دستگاه مراجعه شود.

ภาษาไทย

- โปรดอ่านคู่มือผู้ใช้**ความปลอดภัยและการอ้างอิง**
- โปรดอ้างอิงแรงดันและความถี่ไฟฟ้าของเครื่องรับโทรทัศน์ได้จากฉลากด้านหลังเครื่อง

Tiếng Việt

- Đọc phần **An toàn và Tham khảo.**
- Để biết thông tin về nguồn điện và mức tiêu thụ điện, hãy tham khảo nhãn dán trên sản phẩm.





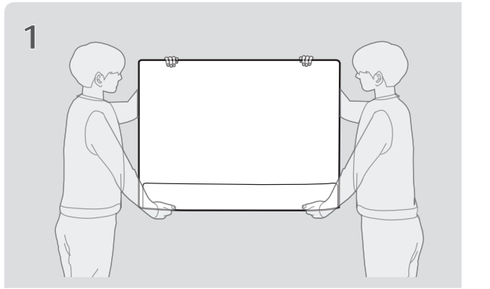

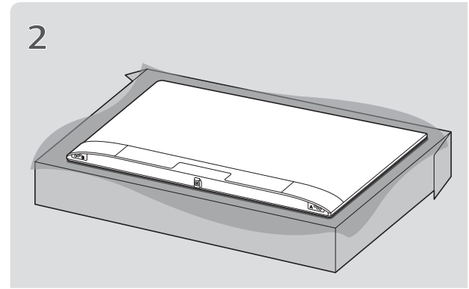

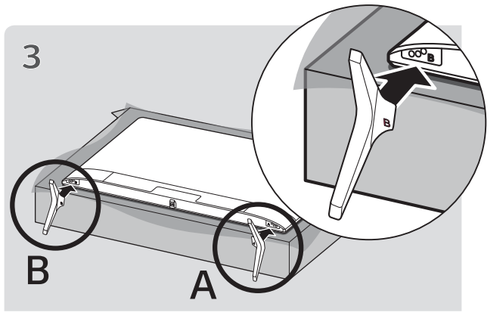

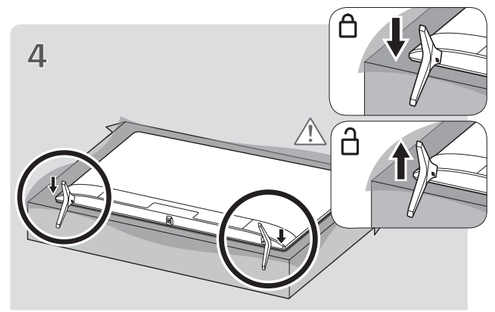

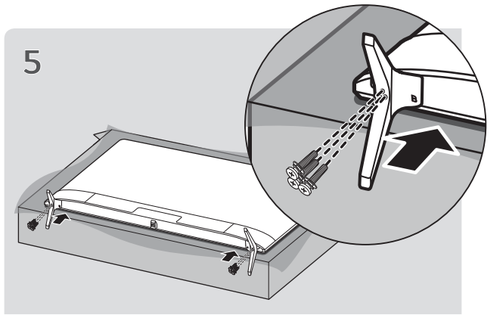

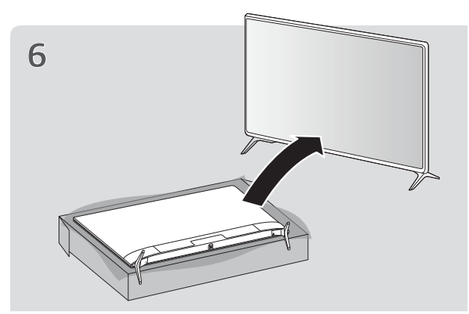

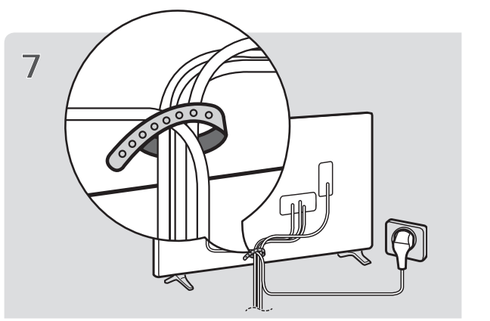

: Depending on model / حسب الطراز / Selon le modèle / Dependendo do modelo / בהתאם לדגם / به مدل بستگی دارد / ขึ้นอยู่กับรุ่น / Tùy theo kiểu sản phẩm



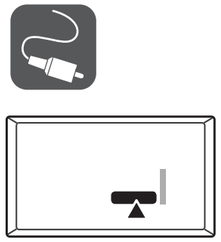

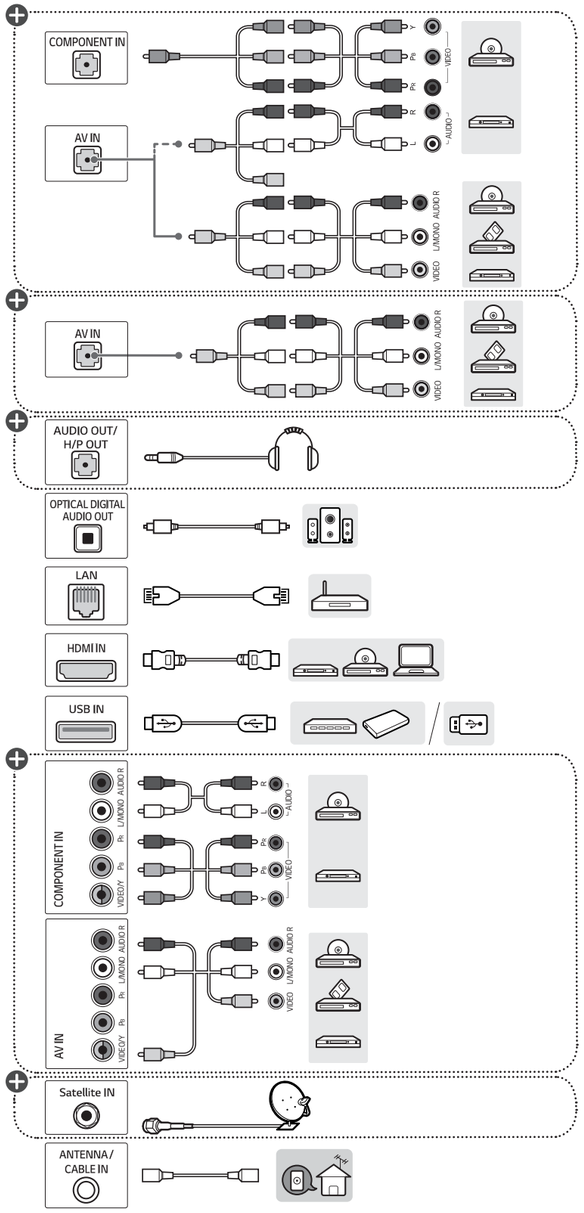

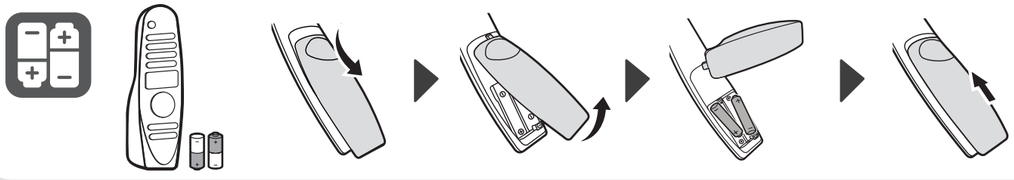

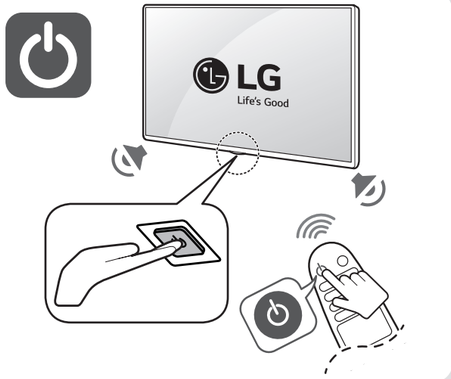

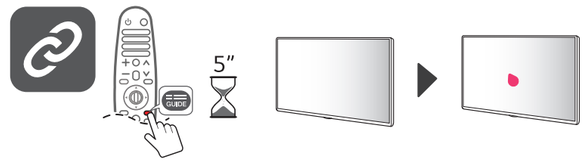



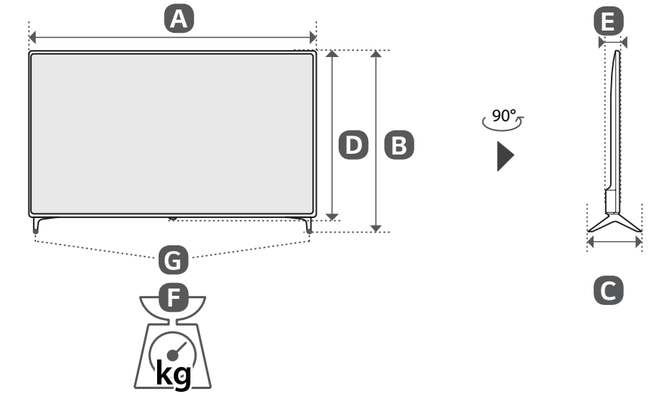

	A	B	C	D	E	F	F-G
	(mm)					(kg)	
75UM7500PTA 75UM7580PVA 75UM7980PTA	1693	1048	345	978	88.8	35.4	34.6
82UM7500PTA 82UM7580PVA	1850	1138	345	1068	89.9	47.0	46.2
86UM7500PTA 86UM7580PVA 86UM7980PTA	1943	1188	345	1118	93.3	45.0	44.2
Power requirement / متطلبات الطاقة / Alimentation / Requisito de alimentação / شرايط برق / דרישות חשמל / **แรงดันและความถี่ไฟฟ้า** / Nguồn điện yêu cầu	AC 100-240 V ~ 50 / 60 Hz تيار متردد 100-240 فولت ~ 50 / 60 هرتز						

Life's Good

OWNER'S MANUAL

Safety and Reference

LED TV*

* Disclaimer

LG LED TV applies LCD screen with LED backlights.

Please read this manual carefully before operating your set and retain it for future reference.

MFL71160502
(1901-REV01)

www.lg.com

Copyright © 2019 LG Electronics Inc. All Rights Reserved.

India region only. (Below sentence is not applicable for above 1920 x 1080 resolution TV models.)

ATTENTION:

This product is qualified for the BEE Star rating in the 'Home' Mode.

The Objectives of Star Labeling Program is designed to promote energy efficient products and practices.

When the television is initially set up, it is designed to meet the BEE Star Labeling requirements while maintaining optimum picture quality.

- Changes to certain functionalities of this television (TV Guide, Picture/sound etc) may change the power consumption.
- Depending upon such changed setting (eg., Retail mode), the power consumption may vary which possibly could exceed the stated energy consumption.

To reset the television to Star rating qualified settings, select 'Home' mode from the initial set-up procedure in 'factory settings' under the 'Set-up' menu.

Warning! Safety Instructions

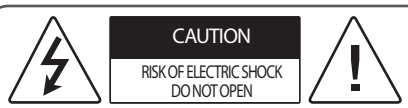

CAUTION : TO REDUCE THE RISK OF ELECTRIC SHOCK, DO NOT REMOVE COVER (OR BACK). NO USER-SERVICEABLE PARTS INSIDE. REFER TO QUALIFIED SERVICE PERSONNEL.

This symbol is intended to alert the user to the presence of uninsulated "dangerous voltage" within the product's enclosure that may be of sufficient magnitude to constitute a risk of electric shock to persons.

This symbol is intended to alert the user to the presence of important operating and maintenance (servicing) instructions in the literature accompanying the appliance.

WARNING : TO REDUCE THE RISK OF FIRE AND ELECTRIC SHOCK, DO NOT EXPOSE THIS PRODUCT TO RAIN OR MOISTURE.

- TO PREVENT THE SPREAD OF FIRE, KEEP CANDLES OR OTHER ITEMS WITH OPEN FLAMES AWAY FROM THIS PRODUCT AT ALL TIMES.
- **Do not place the TV and/or remote control in the following environments:**
  - Keep the product away from direct sunlight.
  - An area with high humidity such as a bathroom
  - Near any heat source such as stoves and other devices that produce heat.
  - Near kitchen counters or humidifiers where they can easily be exposed to steam or oil.
  - An area exposed to rain or wind.
  - Do not expose to dripping or splashing and do not place objects filled with liquids, such as vases, cups, etc. on or over the apparatus (e.g., on shelves above the unit).
  - Near flammable objects such as gasoline or candles, or expose the TV to direct air conditioning.
  - Do not install in excessively dusty places.

  Otherwise, this may result in fire, electric shock, combustion/ explosion, malfunction or product deformation.
- **Ventilation**
  - Install your TV where there is proper ventilation. Do not install in a confined space such as a bookcase.
  - Do not install the product on a carpet or cushion.
  - Do not block or cover the product with cloth or other materials while unit is plugged in.
- Take care not to touch the ventilation openings. When watching the TV for a long period, the ventilation openings may become hot.
- Protect the power cord from physical or mechanical abuse, such as being twisted, kinked, pinched, closed in a door, or walked upon. Pay particular attention to plugs, wall outlets, and the point where the cord exits the device.
- Do not move the TV whilst the Power cord is plugged in.
- Do not use a damaged or loosely fitting power cord.
- Be sure do grasp the plug when unplugging the power cord. Do not pull on the power cord to unplug the TV.
- Do not connect too many devices to the same AC power outlet as this could result in fire or electric shock.
- **Disconnecting the Device from the Main Power**
  - The power plug is the disconnecting device. In case of an emergency, the power plug must remain readily accessible.
- Do not let your children climb or cling onto the TV. Otherwise, the TV may fall over, which may cause serious injury.
- **Outdoor Antenna Grounding** (Can differ by country):
  - If an outdoor antenna is installed, follow the precautions below. An outdoor antenna system should not be located in the vicinity of overhead power lines or other electric light or power circuits, or where it can come in contact with such power lines or circuits as death or serious injury can occur.

    Be sure the antenna system is grounded to provide some protection against voltage surges and built-up static charges. Section 810 of the National Electrical Code (NEC) in the U.S.A. provides information with respect to proper grounding of the mast and supporting structure, grounding of the lead-in wire to an antenna discharge unit, size of grounding conductors, location of antenna discharge unit, connection to grounding electrodes and requirements for the grounding electrode. Antenna grounding according to the National Electrical Code, ANSI/NFPA 70

- **Grounding** (Except for devices which are not grounded.)
  - TV with a three-prong grounded AC plug must be connected to a three-prong grounded AC outlet. Ensure that you connect the earth ground wire to prevent possible electric shock.
- Never touch this apparatus or antenna during a lightning storm. You may be electrocuted.
- Make sure the power cord is connected securely to the TV and wall socket if not secured damage to the Plug and socket may occur and in extreme cases a fire may break out.
- Do not insert metallic or inflammable objects into the product. If a foreign object is dropped into the product, unplug the power cord and contact the customer service.
- Do not touch the end of the power cord while it is plugged in. You may be electrocuted.
- **If any of the following occur, unplug the product immediately and contact your local customer service.**
  - The product has been damaged.
  - If water or another substance enters the product (like an AC adapter, power cord, or TV).
  - If you smell smoke or other odors coming from the TV
  - When lightning storms or when unused for long periods of time.

  Even the TV is turned off by remote control or button, AC power source is connected to the unit if not unplugged in.
- Do not use high voltage electrical equipment near the TV (e.g., a bug zapper). This may result in product malfunction.
- Do not attempt to modify this product in any way without written authorization from LG Electronics. Accidental fire or electric shock can occur. Contact your local customer service for service or repair. Unauthorized modification could void the user's authority to operate this product.
- Use only an authorized attachments / accessories approved by LG Electronics. Otherwise, this may result in fire, electric shock, malfunction, or product damage.
- Never disassemble the AC adapter or power cord. This may result in fire or electric shock.
- Handle the adapter carefully to avoid dropping or striking it. An impact could damage the adapter.
- To reduce the risk of fire or electrical shock, do not touch the TV with wet hands. If the power cord prongs are wet or covered with dust, dry the power plug completely or wipe dust off.
- **Batteries**
  - Store the accessories (battery, etc.) in a safe location out of the reach of children.
  - Do not short circuit, disassemble, or allow the batteries to overheat. Do not dispose of batteries in a fire. Batteries should not be exposed to excessive heat.
- **Moving**
  - When moving, make sure the product is turned off, unplugged, and all cables have been removed. It may take 2 or more people to carry larger TVs. Do not press or put stress on the front panel of the TV. Otherwise, this may result in product damage, fire hazard or injury.
- Keep the packing anti-moisture material or vinyl packing out of the reach of children.
- Do not allow an impact shock, any objects to fall into the product, and do not drop anything onto the screen.
- Do not press strongly upon the panel with a hand or a sharp object such as a nail, pencil, or pen, or make a scratch on it. It may cause damage to screen.
- **Cleaning**
  - When cleaning, unplug the power cord and wipe gently with a soft/dry cloth. Do not spray water or other liquids directly on the TV. Do not clean your TV with chemicals including glass cleaner, any type of air freshener, insecticide, lubricants, wax (car, industrial), abrasive, thinner, benzene, alcohol etc., which can damage the product and/or its panel. Otherwise, this may result in electric shock or product damage.

Preparing

- If the TV is turned on for the first time after it was shipped from the factory, initialization of the TV may take a few minutes.
- Image shown may differ from your TV.
- Your TV's OSD (On Screen Display) may differ slightly from that shown in this manual.
- The available menus and options may differ from the input source or product model that you are using.
- New features may be added to this TV in the future.
- The device must be easily accessed to a location outlet near the access. Some devices are not made by turning on / off button, turning off the device and unplugging the power cord.
- The items supplied with your product may vary depending on the model.
- Product specifications or contents of this manual may be changed without prior notice due to upgrade of product functions.
- For an optimal connection, HDMI cables and USB devices should have bezels less than 10 mm thick and 18 mm width. Use an extension cable that supports USB 2.0 if the USB cable or USB memory stick does not fit into your TV's USB port.

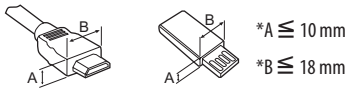

- Use a certified cable with the HDMI logo attached.
- If you do not use a certified HDMI cable, the screen may not display or a connection error may occur. (Recommended HDMI Cable Types)
  - Ultra High-Speed HDMI®/™ cable (3 m or less)
- How to use the ferrite core (Depending on model)
  - Use the ferrite core to reduce the electromagnetic interference in the power cord. Wind the power cord on the ferrite core once.

(Wall side) (TV side)

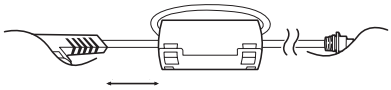

10 cm (+ / -2 cm)

Separate Purchase

Separate purchase items can be changed or modified for quality improvement without any notification. Contact your dealer to buy these items. These devices only work with certain models.

The model name or design may be changed depending on the upgrade of product functions, manufacturer's circumstances or policies.

Magic Remote Control

(Depending on model)

AN-MR19BA

Check whether your TV model supports Bluetooth in the Wireless Module Specification to verify whether it can be used with the Magic Remote.

Wall Mounting Bracket

(Depending on model)

Make sure to use screws and wall mount bracket that meet the VESA standard. Standard dimensions for the wall mount kits are described in the following table.

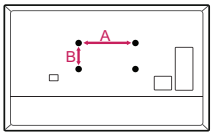

Model	43UM71* 43/50UM73* 43/50UM74* 43/50UM76* 43/50UM77* 43/50UM78*	49/55UM71* 49/55UM73* 55UM74* 55UM76*
VESA (A x B) (mm)	200 x 200	300 x 300
Standard screw	M6	M6
Number of screws	4	4
Wall mount bracket	LSW240B MSW240	OLW480B MSW240

Model	60UM71* 65UM73* 65UM74* 65UM76*	70UM73* 70UM74* 70UM78* 75UM71* 75/82/86UM75* 75/82/86UM76* 75/86UM79*
VESA (A x B) (mm)	300 x 300	600 x 400
Standard screw	M6	M8
Number of screws	4	4
Wall mount bracket	OLW480B	LSW640B

Lifting and moving the TV

Please note the following advice to prevent the TV from being scratched or damaged and for safe transportation regardless of its type and size.

- It is recommended to move the TV in the box or packing material that the TV originally came in.
- Before moving or lifting the TV, disconnect the power cord and all cables.
- When holding the TV, the screen should face away from you to avoid damage.



- Hold the top and bottom of the TV frame firmly. Make sure not to hold the transparent part, speaker, or speaker grill area.

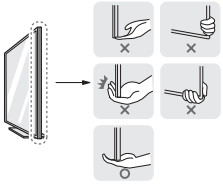

- When transporting a large TV, there should be at least 2 people.
- When transporting the TV by hand, hold the TV as shown in the following illustration.



- When transporting the TV, do not expose the TV to jolts or excessive vibration.
- When transporting the TV, keep the TV upright, never turn the TV on its side or tilt towards the left or right.
- Do not apply excessive pressure to cause flexing / bending of frame chassis as it may damage screen.
- When handling the TV, be careful not to damage the protruding buttons.

- Avoid touching the screen at all times, as this may result in damage to the screen.
- When attaching the stand to the TV set, place the screen facing down on a cushioned table or flat surface to protect the screen from scratches.

Mounting on the Table

1 Lift and tilt the TV into its upright position on a table.
- Leave a 10 cm (minimum) space from the wall for proper ventilation.

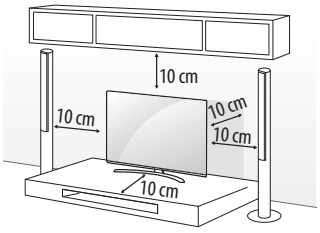

(Depending on model)

2 Connect the power cord to a wall outlet.

- Do not apply foreign substances (oils, lubricants, etc.) to the screw parts when assembling the product. (Doing so may damage the product.)
- If you install the TV on a stand, you need to take actions to prevent the product from overturning. Otherwise, the product may fall over, which may cause injury.
- Do not use any unapproved items to ensure the safety and product life span.
- Any damage or injuries caused by using unapproved items are not covered by the manufacturer's warranty.
- Make sure that the screws are inserted correctly and fastened securely. (If they are not fastened securely enough, the TV may tilt forward after being installed.) Do not use too much force and over tighten the screws; otherwise screw may be damaged and not tighten correctly.
- If a television is not positioned in a sufficiently stable location, it can be potentially hazardous due to falling. Many injuries, particularly to children, can be avoided by taking simple precautions such as:
  - Using cabinets or stands recommended by the manufacturer of the television.
  - Only using furniture that can safely support the television.
  - Ensuring the television is not overhanging the edge of the supporting furniture.
  - Not placing the television on tall furniture (for example, cupboards or bookcases) without anchoring both the furniture and the television to a suitable support.
  - Not standing the televisions on cloth or other materials placed between the television and supporting furniture.
  - Educating children about the dangers of climbing on furniture to reach the television or its controls.

Securing TV to the Wall

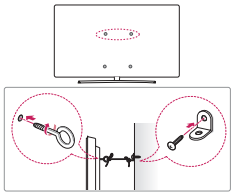

(Depending on model)

1 Insert and tighten the eye-bolts, or TV brackets and bolts on the back of the TV.
   - If there are bolts inserted at the eye-bolts position, remove the bolts first.
2 Mount the wall brackets with the bolts to the wall.
   Match the location of the wall bracket and the eye-bolts on the rear of the TV.
3 Connect the eye-bolts and wall brackets tightly with a sturdy rope.
   Make sure to keep the rope horizontal with the flat surface.

- Use a platform or cabinet that is strong and large enough to support the TV securely.
- Brackets, bolts and ropes are not provided. You can obtain additional accessories from your local dealer.

Mounting to the Wall

Attach an optional wall mount bracket at the rear of the TV carefully and install the wall mount bracket on a solid wall perpendicular to the floor. When you attach the TV to other building materials, please contact qualified personnel. LG recommends that wall mounting be performed by a qualified professional installer. We recommend the use of LG's wall mount bracket. LG's wall mount bracket is easy to move with cables connected. When you do not use LG's wall mount bracket, please use a wall mount bracket where the device is adequately secured to the wall with enough space to allow connectivity to external devices. It is advised to connect all the cables before installing fixed wall mounts.

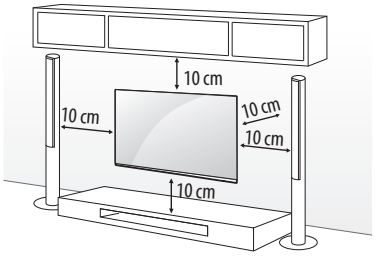

(Depending on model)

- Remove the stand before installing the TV on a wall mount by performing the stand attachment in reverse.
- For more information of screws and wall mount bracket, refer to the Separate purchase.
- If you intend to mount the product to a wall, attach VESA standard mounting interface (optional parts) to the back of the product. When you install the set to use the wall mounting bracket (optional parts), fix it carefully so as not to drop.
- When mounting a TV on the wall, make sure not to install the TV by hanging the power and signal cables on the back of the TV.
- Do not install this product on a wall if it could be exposed to oil or oil mist. This may damage the product and cause it to fall.

75/86UM76*

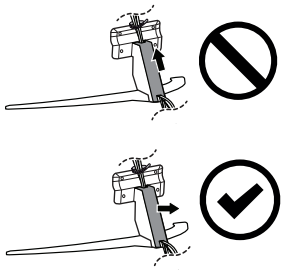

82UM76*

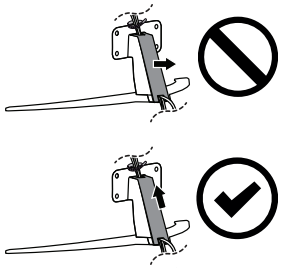

- Do not use a sharp object when you detached the cable cover. This could damage the cable or the cabinet. It may also cause personal harm. (Depending on model)

- When installing the wall mounting bracket, it is recommended to cover the stand hole using tape, in order to prevent the influx of dust and insects. (Depending on model)

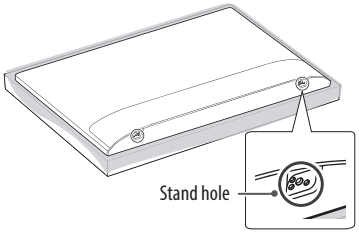

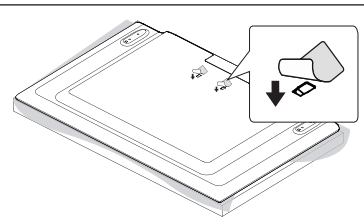

Connections

Connect various external devices to the TV and switch input modes to select an external device. For more information of external device's connection, refer to the manual provided with each device.

Antenna/Cable

Connect the TV to a wall antenna socket with an RF cable (75 Ω).

- Use a signal splitter to use more than 2 TVs.
- If the image quality is poor, install a signal amplifier properly to improve the image quality.
- If the image quality is poor with an antenna connected, try to realign the antenna in the correct direction.
- An antenna cable and converter are not supplied.
- For a location that is not supported with ULTRA HD broadcasting, this TV cannot receive ULTRA HD broadcasts directly.

Satellite dish

Connect the TV to a satellite dish to a satellite socket with a satellite RF cable (75 Ω). (Depending on model)

CI module

View the encrypted (pay) services in digital TV mode. (Depending on model)

- Check if the CI module is inserted into the PCMCIA card slot in the right direction. If the module is not inserted properly, this can cause damage to the TV and the PCMCIA card slot.
- If the TV does not display any video and audio when CI+ CAM is connected, please contact to the Terrestrial/Cable/Satellite Service Operator.

Other connections

Connect your TV to external devices. For the best picture and audio quality, connect the external device and the TV with the HDMI cable. Some separate cable is not provided.

HDMI

- Supported HDMI Audio format:
  (Depending on model)
  DTS (44.1 kHz / 48 kHz / 88.2 kHz / 96 kHz),
  DTS HD (44.1 kHz / 48 kHz / 88.2 kHz / 96 kHz / 176.4 kHz / 192 kHz),
  True HD (48 kHz),
  Dolby Digital / Dolby Digital Plus (32 kHz / 44.1 kHz / 48 kHz),
  PCM (32 kHz / 44.1 kHz / 48 kHz / 96 kHz / 192 kHz)

(Only UHD models)

- ⚙ → ⋮ (⚙) → [Picture] → [Additional Settings] → [HDMI ULTRA HD Deep Colour]
  - On: Support 4K @ 50/60 Hz (4:4:4, 4:2:2, 4:2:0)
  - Off: Support 4K @ 50/60 Hz 8 bit (4:2:0)
- If the device connected to Input Port also supports ULTRA HD Deep Colour, your picture may be clearer. However, if the device doesn't support it, it may not work properly. In that case, connect the device to a different HDMI port or change the TV's [HDMI ULTRA HD Deep Colour] setting to off.

USB

Some USB Hubs may not work. If a USB device connected using a USB Hub is not detected, connect it to the USB port on the TV directly.

External Devices

Available external devices are: Blu-ray player, HD receivers, DVD players, VCRs, audio systems, USB storage devices, PC, gaming devices, and other external devices.

- The external device connection may differ from the model.
- Connect external devices to the TV regardless of the order of the TV port.
- If you record a TV program on a Blu-ray/DVD recorder or VCR, make sure to connect the TV signal input cable to the TV through a DVD recorder or VCR. For more information of recording, refer to the manual provided with the connected device.
- Refer to the external equipment's manual for operating instructions.
- If you connect a gaming device to the TV, use the cable supplied with the gaming device.
- In PC mode, there may be noise associated with the resolution, vertical pattern, contrast or brightness. If noise is present, change the PC output to another resolution, change the refresh rate to another rate or adjust the brightness and contrast on the [PICTURE] menu until the picture is clear.
- In PC mode, some resolution settings may not work properly depending on the graphics card.
- If ULTRA HD content is played on your PC, video or audio may become disrupted intermittently depending on your PC's performance. (Depending on model)
- When connecting via a wired LAN, it is recommended to use a CAT 7 cable. (Only when **LAN** port is provided.)

Using Button

You can simply operate the TV functions, using the button.

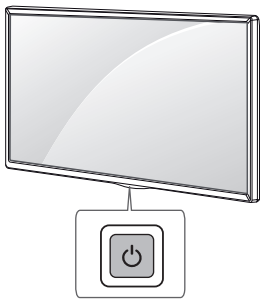

Basic functions

	Power On (Press) Power Off [1] (Press and Hold) Menu Control (Press [2]) Menu Selection (Press and Hold [3])

1 All running apps will close, and any recording in progress will stop.
2 You can access and adjust the menu by pressing the button when TV is on.
3 You can use the function when you access menu control.

Adjusting the menu

When the TV is turned on, press the ⏻ button one time. You can adjust the Menu items using the button.

⏻	Turns the power off.
⇄	Changes the input source.
+ −	Adjusts the volume level.
∧ ∨	Scrolls through the saved programmes.

Using Remote Control

(Depending on model)

The descriptions in this manual are based on the buttons on the remote control. Please read this manual carefully and use the TV correctly.

To replace batteries, open the battery cover, replace batteries (1.5 V AAA) matching the ⊕ and ⊖ ends to the label inside the compartment, and close the battery cover. To remove the batteries, perform the installation actions in reverse.

Make sure to point the remote control toward the remote control sensor on the TV.

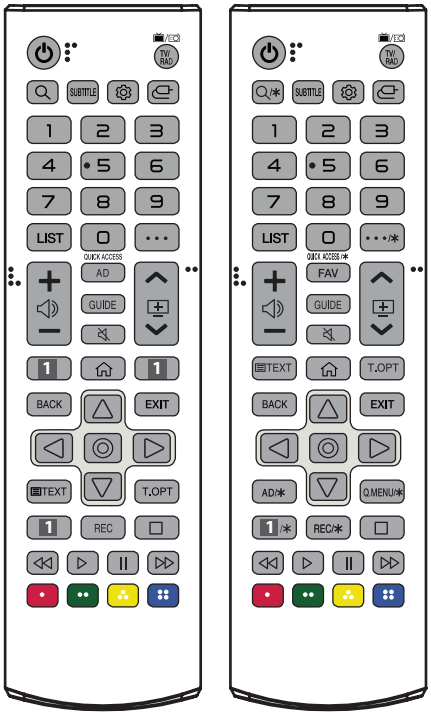

(Some buttons and services may not be provided depending on models or regions.)

**** To use the button, press and hold for more than 1 second.**

(POWER) Turns the TV on or off.
TV/RAD / Selects Radio, TV and DTV programme.
, /✱ **(SEARCH)** Search for content such as TV programmes, movies and other videos, or perform a web search by entering text in the search bar. (Depending on model)
SUBTITLE Recalls your preferred subtitle in digital mode.
(Q. Settings) Accesses the Quick Settings.
(INPUT) Changes the input source.
Number buttons Enters numbers.
** Accesses the [QUICK HELP].
LIST Accesses the saved programmes list.
, /✱ **(MORE ACTIONS)** Displays more remote control functions. (Depending on model)
QUICK ACCESS, **QUICK ACCESS/✱**** Edits QUICK ACCESS. (Depending on model)

- QUICK ACCESS is a feature that allows you to enter a specified app or Live TV directly by pressing and holding the number buttons.

Adjusts the volume level.
AD, AD/✱ Audio descriptions function will be enabled. (Depending on model)
FAV Accesses your favourite programme list.
GUIDE Shows programme guide.
(MUTE) Mutes all sounds.
** **(MUTE)** Accesses the [Accessibility] menu.
Scrolls through the saved programmes.
1, 1 /✱ **Streaming Service buttons** Connects to the Video Streaming Service. (Depending on model)
(HOME) Accesses Home menu.
** **(HOME)** Shows the previous history.
BACK Returns to the previous level.
EXIT Clears on-screen displays and returns to TV viewing.
Navigation buttons (up/down/left/right) Scrolls through menus or options.
(OK) Selects menus or options and confirms your input.
TEXT, T.OPT (Teletext buttons) These buttons are used for teletext.
Q.MENU/✱ Accesses the Quick menus. (Depending on model)
REC, REC/✱ Starts to record and displays record menu. (Only Time Machine Ready supported model) (Depending on model)
(Control buttons) Controls media contents.
, , , These access special functions in some menus.
** Enter Cheering mode.

Using Magic Remote Control

(Depending on model)

The descriptions in this manual are based on the buttons on the remote control. Please read this manual carefully and use the TV correctly.

When the message [Magic Remote battery is low. Please change the battery.] is displayed, replace the battery.

To replace batteries, open the battery cover, replace batteries (1.5 V AA) matching the ⊕ and ⊖ ends to the label inside the compartment, and close the battery cover. Be sure to point the magic remote toward the remote control sensor on the TV. To remove the batteries, perform the installation actions in reverse.

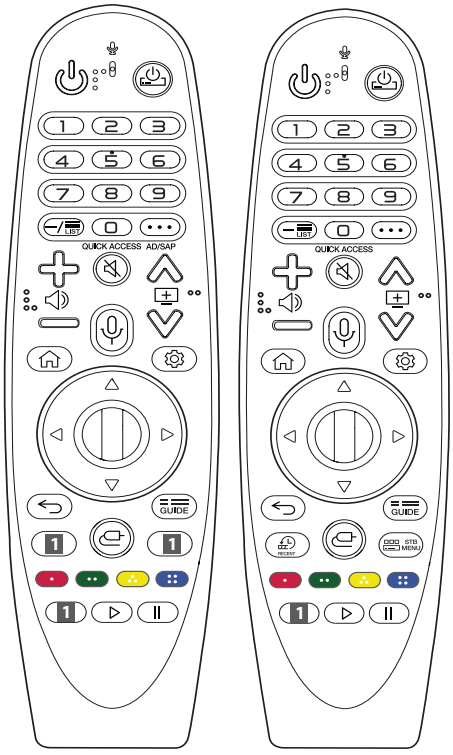

(Some buttons and services may not be provided depending on models or regions.)

**** To use the button, press and hold for more than 1 second.**

(POWER) Turns the TV on or off.

(STB POWER) You can turn your set-top box on or off by adding the set-top box to the universal remote control for your TV.

Number buttons Enters numbers.

** Accesses the [QUICK HELP].

(DASH) Inserts a — between numbers such as 2-1 and 2-2.

LIST Accesses the saved programmes list.

(MORE ACTIONS) Displays more remote control functions.

QUICK ACCESS** Edits QUICK ACCESS.

- QUICK ACCESS is a feature that allows you to enter a specified app or Live TV directly by pressing and holding the number buttons.

AD/SAP** Audio descriptions function will be enabled.

Adjusts the volume level.

(MUTE) Mutes all sounds.

** **(MUTE)** Accesses the [Accessibility] menu.

Scrolls through the saved programmes.

** **(Voice recognition)** Network connection is required to use the voice recognition function. Once the voice display bar is activated on the TV screen, press and hold the button and speak your command out loud.

(HOME) Accesses the Home menu.

** **(HOME)** Shows the previous history.

(Q. Settings) Accesses the Quick Settings

** **(Q. Settings)** Displays the [All Settings] menu.

Wheel (OK) Press the center of the button to select a menu. You can change programmes by using the button.

(up/down/left/right) Press the up, down, left or right button to scroll the menu. If you press buttons while the pointer is in use, the pointer will disappear from the screen and Magic Remote will operate like a general remote control. To display the pointer on the screen again, shake Magic Remote to the left and right.

(BACK) Returns to the previous level.

** **(BACK)** Clears on-screen displays and returns to last input viewing.

GUIDE Shows programme guide.

Streaming Service buttons Connects to the Video Streaming Service.

Shows the previous history.
(INPUT) Changes the input source.
** **(INPUT)** Accesses the [HOME DASHBOARD].
STB MENU Displays the set-top box Home menu. (When you are not watching via a set-top box: the display changes to the set-top box screen.)
, , , These access special functions in some menus.
** Runs the record function.
** Enter Cheering mode.
▷,❙❙**(Control buttons)** Controls media contents.

Registering Magic Remote Control

How to register the Magic Remote Control

To use the Magic Remote, first pair it with your TV.

1 Put batteries into the Magic Remote and turn the TV on.
2 Point the Magic Remote at your TV and press the **Wheel (OK)** on the remote control.

* If the TV fails to register the Magic Remote, try again after turning the TV off and back on.

How to deregister the Magic Remote Control

Press the **(BACK)** and **(HOME)** buttons at the same time, for five seconds, to unpair the Magic Remote with your TV.

* Pressing and holding the GUIDE button will let you cancel and re-register Magic Remote at once.

- Do not mix new batteries with old batteries. This may cause the batteries to overheat and leak.
- Failure to match the correct polarities of the battery may cause the battery to burst or leak, resulting in fire, personal injury, or ambient pollution.
- This apparatus uses batteries. In your community there might be regulations that require you to dispose of these batteries properly due to environmental considerations. Please contact your local authorities for disposal or recycling information.
- Batteries inside or inside the product shall not be exposed to excessive heat such as sunshine, fire or the like.
- In Analogue TV and some countries, some remote control buttons may not work.

User Guide

For more information about this TV, read the USER GUIDE embedded in the product. (Depending on model)

- To open the USER GUIDE → (⋮) → [General] → [About This TV] → [User Guide]

(Australia region only)

freeview

Freeview Plus provides access to content and services from the Freeview networks. The Freeview Plus service provides a 7 + day EPG, all available Catch Up TV, recommendations and the ability to set reminders and favourites. Freeview Plus is available by pressing the green button on the remote.

*Freeview Plus uses HbbTV technology which combines broadcast and broadband. It requires an internet connection. Normal data usage charges and conditions apply.

Troubleshooting

Cannot control the TV with the remote control.

- Check the remote control sensor on the product and try again.
- Check if there is any obstacle between the product and the remote control.
- Check if the batteries are still working and properly installed (⊕ to ⊕, ⊖ to ⊖).

No image display and no sound is produced.

- Check if the product is turned on.
- Check if the power cord is connected to a wall outlet.
- Check if there is a problem in the wall outlet by connecting other products.

The TV turns off suddenly.

- Check the power control settings. The power supply may be interrupted.
- Check if the auto-off function is activated on the settings related time.
- If there is no signal while the TV is on, the TV will turn off automatically after 15 minutes of inactivity.

When connecting to the PC (HDMI), no signal is detected.

- Turn the TV off/on using the remote control.
- Reconnect the HDMI cable.
- Restart the PC with the TV on.

Abnormal Display

- If the product feels cold to the touch, there may be a small "flicker" when it is turned on. This is normal, there is nothing wrong with product.
- This panel is an advanced product that contains millions of pixels. You may see tiny black dots and/or brightly coloured dots (red, blue or green) at a size of 1 ppm on the panel. This does not indicate a malfunction and does not affect the performance and reliability of the product. This phenomenon also occurs in third-party products and is not subject to exchange or refund.
- You may find different brightness and colour of the panel depending on your viewing position(left/right/top/down). This phenomenon occurs due to the characteristic of the panel. It is not related with the product performance, and it is not malfunction.
- Displaying a still image for a prolonged period of time may cause image sticking. Avoid displaying a fixed image on the TV screen for a long period of time.

Generated Sound

- "Cracking" noise: A cracking noise that occurs when watching or turning off the TV is generated by plastic thermal contraction due to temperature and humidity. This noise is common for products where thermal deformation is required.
- Electrical circuit humming/panel buzzing: A low level noise is generated from a high-speed switching circuit, which supplies a large amount of current to operate a product. It varies depending on the product.
  This generated sound does not affect the performance and reliability of the product.

⚠

- When cleaning the product, be careful not to allow any liquid or foreign objects to enter the gap between the upper, left or right side of the panel and the guide panel. (Depending on model)

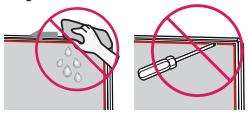

- Make sure to wring any excess water or cleaner from the cloth.
- Do not spray water or cleaner directly onto the TV screen.
- Make sure to spray just enough of water or cleaner onto a dry cloth to wipe the screen.

Specifications

(Depending on country)

Broadcasting Specifications		
	Digital TV (Depending on country)	Analogue TV (Depending on country)
Television system	DVB-T/T2[1] DVB-T/T2/C/S/S2[2]	PAL B/B, PAL B/G, PAL D/K, PAL-I SECAM B/G, SECAM D/K NTSC-M
Programme coverage	VHF, UHF C-Band[2], Ku-Band[2]	VHF, UHF, CATV
Maximum number of storable programmes	DVB-T/T2 & Analogue TV : 3,000 DVB-S/S2 : 6,000	
External antenna impedance	75 Ω	
CI Module[3] (W x H x D)	100.0mm x 55.0mm x 5.0mm	

1 Only DVB-T2 support models. (Despite DVB-T2 model, DVB-T/T2 function does not apply in Philippines.)
2 Only DVB-T2/C/S2 support models.
3 Depending on model.

Wireless module (LGSBWAC92) specifications	
Wireless LAN (IEEE 802.11a/b/g/n/ac)	
Frequency Range	Output Power (Max.)
2400 to 2483.5 MHz 5150 to 5725 MHz 5725 to 5850 MHz (Not for EU)	18 dBm 18 dBm 12 dBm
Bluetooth	
Frequency Range	Output Power (Max.)
2400 to 2483.5 MHz	8 dBm
As band channels can vary per country, the user cannot change or adjust the operating frequency. This product is configured for the regional frequency table. For consideration of the user, this device should be installed and operated with a minimum distance of 20 cm between the device and the body. * IEEE 802.11ac is not available in all countries.	

(Australia and New Zealand region only)

R-NZ

The use of the 5,150 – 5,350 MHz band is restricted to indoor use only. This restriction exists in the countries Australia (AU) and New Zealand (NZ).

(For Wi-Fi/Bluetooth built-in model or Wi-Fi built-in model)

"RF Radiation Exposure Statement

This equipment shall be installed and used at a minimum distance of 20 cm from the human body."

Environment condition	
Operating Temperature	0 ℃ to 40 ℃
Operating Humidity	Less than 80 %
Storage Temperature	-20 ℃ to 60 ℃
Storage Humidity	Less than 85 %

- The energy information provided with the product is indicated in accordance with the regulations of each country. (Depending on Country)
  - The Energy consumption is measured in accordance with IEC 62087.
- Actual Energy consumption may vary depending on factors such as the type of video content being played and TV settings.

Open Source Software Notice Information

To obtain the source code under GPL, LGPL, MPL, and other open source licenses, that is contained in this product, please visit http://opensource.lge.com.

In addition to the source code, all referred license terms, warranty disclaimers and copyright notices are available for download.

LG Electronics will also provide open source code to you on CD-ROM for a charge covering the cost of performing such distribution (such as the cost of media, shipping, and handling) upon email request to opensource@lge.com.

This offer is valid for a period of three years after our last shipment of this product. This offer is valid to anyone in receipt of this information.

Licenses

HDMI HIGH-DEFINITION MULTIMEDIA INTERFACE

POWERED BY QUICKSET

(Magic Remote supported models only)

Regulatory

WARNING!

Never place a television set in an unstable location. A television set may fall, causing serious personal injury or death. Many injuries, particularly to children, can be avoided by taking simple precautions such as:

- Using cabinets or stands recommended by the manufacturer of the television set.
- Only using furniture that can safely support the television set.
- Ensuring the television set is not overhanging the edge of the supporting furniture.
- Not placing the television set on tall furniture (for example, cupboards or bookcases) without anchoring both the furniture and the television set to a suitable support.
- Not placing the television set on cloth or other materials that may be located between the television set and supporting furniture.
- Educating children about the dangers of climbing on furniture to reach the television set or its controls.

If your existing television set is being retained and relocated, the same considerations as above should be applied.

Symbols

~	Refers to alternating current(AC).
⎓	Refers to direct current(DC).
⧈	Refers to class II equipment.
⏻	Refers to stand-by.
|	Refer to "ON" (power).
⚡	Refers to dangerous voltage.

Environmental Information

(Only India)

Disposal of your old appliance (as per e-waste Rules)



1. When this crossed out wheeled bin symbol is depicted on the product and its operator's manual, it means the product is covered by the e-waste Management and Handling Rules, 2011 and are meant to be recycled, dismantled, refurbished or disposed off.
2. **Do's:**
   a. The product is required to be handed over only to the authorized recycler for disposal.
   b. Keep the product in isolated area, after it becomes non-functional/unrepairable so as to prevent its accidental breakage.

Don't:

a. The product should not be opened by the user himself/herself, but only by authorized service personnel.

b. The product is not meant for re-sale to any unauthorized agencies/scrap dealer/kabariwalah.

c. The product is not meant for mixing into household waste stream.

d. Do not keep any replaced spare part(s) from the product in exposed area.

3. Any disposal through unauthorized agencies/person will attract action under Environment (Protection) Act 1986.

4. "This product is complied with the requirement of Hazardous Substances as specified under Rule 13 (1) & (2) of the E-Waste (Management & Handling) Rules, 2011."

5. To locate a nearest collection centre or call for pick-up (limited area only) for disposal of this appliance, please contact Toll Free No. **1800-315-9999 / 1800-180-9999** for details. All collection centre and pick up facilities are done by third parties with **LG Electronics India Pvt. Ltd.** Merely as a facilitator. For more detailed information, please visit: *http://www.lg.com/in.*

पर्यावरणीय जानकारी

अपने पुराने निपटान के उपकरण (ई-अपशिष्ट नियम के अनुसार)



1. .जब इस काटे गए पहिये वाले बिन का चिन्ह किसी उपकरण और इसके ओपेरटर की पुस्तिका के साथ संलग्न होता है तो इसका मतलब है कि इसे "ई-अपशिष्ट "(प्रबंधन और हथालन) नियम २०११ के अंतर्गत सम्मिलित किया गया है , और इसे नवीनीकरणकरन ,विघटन और निपटान के लिए बनाया गया है ।

2. करें :

क . उपकरण को सिर्फ अधिकृत पुनः नवीनीकरणकर्ता को ही निपतारण करने हेतु हस्तांतरित करें ।

ख. जब उपकरण कार्यरत न हो इसे अलग क्षेत्र में रखें ताकि उपकरण से होने वाली दुर्घटनाओ से बचा जा सके ।

न करें :

क. इस उपकरण को स्वयं/खुद नहीं खोलना चाहिए ! उपकरण को केवल अधिकृत अधिकारी के द्वारा ही खोला जाना चाहिए ।

ख. इस उपकरण को पुनः बिक्री के लिए किसी भी कबाड़ीवाला / भंगार-वाला / अनाधिकृत संस्था को न दें ।

ग. इस उपकरण को किसी घरेलू अपशिष्ट सामान के साथ मिलाकर न रखें ।

घ. उपकरण के बदले हुए या आतंरिक पुरजो को खुले क्षेत्र में न रखें ।

3. यदि किसी अनाधिकृत विभाग या व्यक्ति के द्वारा निपटारन किया जाता है तो यह पर्यावरण (सुरक्षा) धारा १९८६ के अंतर्गत आता है ।

4. यह उत्पाद ई-अपशिष्ट (प्रबंधन और हथालन) नियम 2011 के अन्तर्गत 13(1) एवं (2) के तहत निर्दिष्ट खतरनाक पदार्थो की आवश्यकता का पालन करता है

5. उपरोक्त पदार्थो के निपटारन के लिए नजदीकी निपटारन संसथान (संकीर्ण क्षेत्र)में कॉल करें। अधिक जानकारी के लिए हमारे टोल फ्री नंबर **1800–315–9999 / 1800–180–9999** पर कॉल करें. सभी संग्रहण केंद्र व पिक-अप की सुविधाएं किसी थर्ड- पार्टी जो **LG Electronics India Pvt. Ltd.** को अपनी सेवाएं प्रदान कर रही हों, से करवाएं ।

ज्यादा जानकारी के लिए देखें वेब:साईट : http://www.lg.com/in



The model and serial number of the product are located on the back and on one side of the product.
Record them below in case you ever need service.

Model _____

Serial No. _____