LG
Life's Good

ENGLISH
ČESKY
SLOVENŠČINA
DEUTSCH
SLOVENČINA
SHQIP
FRANÇAIS
POLSKI
BOSANSKI
NEDERLANDS
ROMÂNĂ
SVENSKA
ITALIANO
LATVIEŠU
DANSK
ESPAÑOL
HRVATSKI
NORSK
ΕΛΛΗΝΙΚΑ
SRPSKI
SUOMI
PORTUGUÊS
БЪЛГАРСКИ
MAGYAR
МАКЕДОНСКИ

SIMPLE MANUAL

Mini Hi-Fi Audio

Please read this manual carefully before operating your set and retain it for future reference. To view the instructions of advanced features, visit http://www.lg.com and then download Owner's Manual. Some of the content in this manual may differ from your unit.

MODEL
OK55N

MFL70343964

www.lg.com

Copyright © 2021 LG Electronics Inc. All Rights Reserved.

1903_Rev03



Top panel

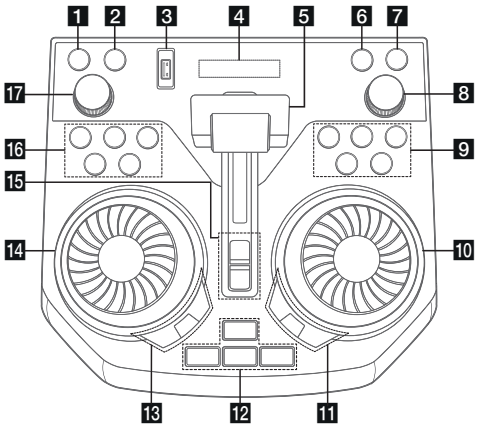

1 ⏻ (Standby)
Turns the power on or off.

2 **USB REC / DEMO**
- Records to USB.
- To stop Recording, press and hold for 3 seconds.
- In power off status, if you press **USB REC / DEMO**, show demo mode.

3 USB Port
You can play sound files by connecting the USB device.

4 Display window

5 **PARTY ACCELERATOR** lever
Slide the lever to create a party atmosphere.

6 **F** (Function)
Selects the function and input source.

7 **WIRELESS LINK**
- Selects MAIN or OTHER on WIRELESS PARTY LINK mode.
- Enable or disable WIRELESS PARTY LINK mode.

8 **MASTER VOL.** (Volume) **-/+**
Adjusts speaker volume.

9 ⏮ (Skip/Search)
- Skips backward.
- Searches for a section within a track/file.

⏯ (Play/Pause)
Starts or pauses playback.

⏭ (Skip/Search)
- Skips forward.
- Searches for a section within a track/file.

☐ (Stop)
Stops playback or cancels DELETE function.

⏏ (Open/Close)
Opens and closes the disc tray.

10 **DJ SCRATCH / SEARCH & MULTI**
- Turns clockwise or counterclockwise to make scratch sound.
- Searches a folder or a file

11 **SPECIAL EQ / BASS BLAST** (or **BASS BLAST+**)
- Chooses special equalizer.
- Press and hold to select BASS (or BASS+) effect directly.

SEARCH
Moves to folder or file in selection mode.

OK
Selects a folder when searching a file.

12 **PARTY STARTER**
- In power off state, this function turns on the unit with Party Kick Starter sound.
- In power on state, this function mixes the music with Party Kick Starter sound.

CLUB, DRUM, USER (DJ PAD)
Selects CLUB, DRUM or USER sound effect to mix.
(If you want to use USER, you have to register a source with "Music Flow Bluetooth" app.)

1, 2, 3 (DJ PAD)
Press a desired sound pad.

13 **DJ EFFECT**
Selects a desired DJ effect.

USER EQ
Selects the equalizer created by your own.

LIGHTING
Selects the lighting mode.

14 **DJ SCRATCH / LEVEL CONTROL**
- Turns clockwise or counterclockwise to make scratch sound.
- Turns clockwise or counterclockwise to control the USER EQ level.
- Adjust DJ EFFECT level.
- Selects the vocal effects.
- Selects the lighting effects.

15 **PARTY ACCELERATOR MODE**
Selects PARTY ACCELERATOR MODE.

DJ LOOP
Selects DJ LOOP mode.
(DJ LOOP mode can use during CD/USB playback.)

16 KEY CHANGER (♭ /#)
Changes the key to suit your vocal range.

VOICE CANCELLER
You can reduce the vocal tones during music playback from various input sources.

VOCAL EFFECTS
Selects VOCAL EFFECTS mode.

MIC ECHO
Selects ECHO mode.

17 MIC VOL. (Microphone Volume) **-/+**
Adjust microphone volume.

Front panel / Rear panel

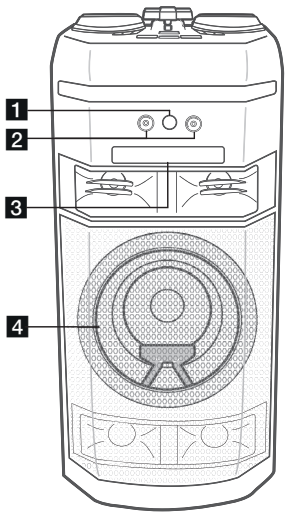

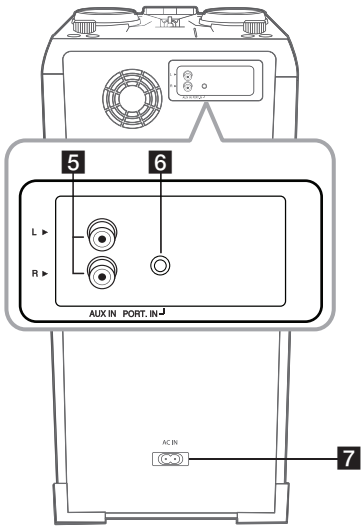

1 (Remote sensor)
2 **MIC**(Microphone) **1/2** jack
3 Disc tray
4 Lighting

5 **AUX IN** (L/R) : Connect an auxiliary device.
6 **PORT.**(Portable) **IN** : Connect a portable device.
7 **AC IN** socket

Controller App

Download the **Music Flow Bluetooth** App to your device. (Android only)

LG Sound Sync (Wireless)



For more information, download the online owner's manual. **http://www.lg.com**

Additional Information

Specifications

Power Requirements	Refer to the main label on the unit.
Power Consumption	Refer to the main label on the unit.
	Networked standby : 0.5 W (If all network ports are activated.)
Dimensions (W x H x D)	Approx. 330.0 mm x 716.0 mm x 318.0 mm
Bus Power Supply (USB)	5 V ⎓ 500 mA
Amplifier (Total RMS output power)	500 W RMS

Design and specifications are subject to change without notice.

Caution

- Connect the power cord to wall outlet directly if possible. Or when you use an extension cable, it is highly recommended to use an extension cable of 110 V / 15 A or 230 V / 15 A, otherwise the unit may not operate properly because of the lack of power supply.
- Do not overload the extension cord with excessive electrical load.

How to disconnect the wireless network connection or the wireless device

Turn off the unit by pressing the power button for more than 5 seconds.

Replacement of battery

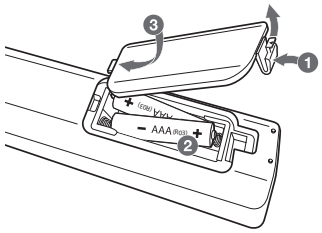

Declaration of Conformity

CE

Hereby, LG Electronics declares that the radio equipment type MINI HI-FI AUDIO is in compliance with Directive 2014/53/EU. The full text of the EU declaration of conformity is available at the following internet address:

http://www.lg.com/global/support/cedoc/cedoc#

For consideration of the user, this device should be installed and operated with a minimum distance of 20 cm between the device and the body.

Frequency range	Output power (Max.)
2402 to 2480 MHz	10 dBm