OWNER'S MANUAL

LG Wi-Fi Sound Bar

Please read this manual carefully before operating your set and retain it for future reference.

MODEL

DSN8YG (DSN8YG, SPN8-W)

www.lg.com

2104_Rev04

Copyright © 2020-2021 LG Electronics Inc. All Rights Reserved.

Safety Information

CAUTION

RISK OF ELECTRIC SHOCK DO NOT OPEN

CAUTION: TO REDUCE THE RISK OF ELECTRIC SHOCK DO NOT REMOVE COVER (OR BACK) NO USER-SERVICEABLE PARTS INSIDE REFER SERVICING TO QUALIFIED SERVICE PERSONNEL.

This lightning flash with arrowhead symbol within an equilateral triangle is intended to alert the user to the presence of uninsulated dangerous voltage within the product's enclosure that may be of sufficient magnitude to constitute a risk of electric shock to persons.

The exclamation point within an equilateral triangle is intended to alert the user to the presence of important operating and maintenance (servicing) instructions in the literature accompanying the product.

WARNING: TO PREVENT FIRE OR ELECTRIC SHOCK HAZARD, DO NOT EXPOSE THIS PRODUCT TO RAIN OR MOISTURE.

WARNING: Do not install this equipment in a confined space such as a book case or similar unit.

CAUTION: Do not use high voltage products around this product. (ex. Electrical swatter) This product may malfunction due to electrical shock.

CAUTION: The apparatus should not be exposed to water (dripping or splashing) and no objects filled with liquids, such as vases, should be placed on the apparatus.

CAUTION: Do not block any ventilation openings. Install in accordance with the manufacturer's instructions.
Slots and openings in the cabinet are provided for ventilation and to ensure reliable operation of the product and to protect it from over heating. The openings should never be blocked by placing the product on a bed, sofa, rug or other similar surface. This product shall not be placed in a built-in installation such as a bookcase or rack unless proper ventilation is provided or the manufacturer's instruction has been adhered to.

CAUTION: No naked flame sources, such as lighted candles, should be placed on the apparatus.

NOTICE: For safety marking information including product identification and supply ratings, please refer to the main label on the bottom or the other surface of the product.

CAUTION concerning the Power Cord

The Power Plug is the disconnecting device. In case of an emergency, the Power Plug must remain readily accessible.

Check the specification page of this owner's manual to be certain of the current requirements.

Do not overload wall outlets. Overloaded wall outlets, loose or damaged wall outlets, extension cords, frayed power cords, or damaged or cracked wire insulation are dangerous. Any of these conditions could result in electric shock or fire. Periodically examine the cord of your device, and if its appearance indicates damage or deterioration, unplug it, discontinue use of the device, and have the cord replaced with an exact replacement part by an authorized service center. Protect the power cord from physical or mechanical abuse, such as being twisted, kinked, pinched, closed in a door, or walked upon. Pay particular attention to plugs, wall outlets, and the point where the cord exits the device.

CAUTION: Be careful to make sure children do not put their hands or any objects into the *speaker duct.

* speaker duct: A hole for plentiful bass sound on speaker cabinet. (enclosure)

CAUTION: Only use the AC adapter supplied with this device. Do not use a power supply from another device or another manufacturer. Using any other power cable or power supply may cause damage to the device and void your warranty.

Symbols

~	Refers to alternating current (AC).
⎓	Refers to direct current (DC).
⧈	Refers to class II equipment.
⏻	Refers to stand-by.
I	Refers to "ON" (power).
ϟ	Refers to dangerous voltage.

Table of Contents

1 Getting Started

2 Safety Information
6 Introduction
7 Front panel
9 Rear panel
10 Remote control
13 Speakers position
14 Installing the sound bar
15 Mounting the unit on a wall

2 Connecting

17 Network connection
17 – Installing “Google Home” App
18 – Launch the app to connect Wi-Fi
19 Organizing cables (Optional)
19 Connecting the AC Adapter
20 Wireless subwoofer and rear speaker (Sold Separately) connection
20 – Wireless subwoofer connection
21 – Rear speakers connection (Sold Separately)
22 – Surround sound
25 – How to Affix the Ferrite Core
26 Connecting to your TV
26 – Using an OPTICAL cable
26 – LG Sound Sync
27 – Using an HDMI cable
28 – ARC (Audio Return Channel) function
28 – eARC (Enhanced Audio Return Channel) function
28 – What is SIMPLINK?
29 – Additional information for HDMI
30 Optional equipment connection
30 – DOLBY ATMOS®
30 – DTS:X®
31 – HDMI IN connection
31 – OPTICAL IN connection
32 – USB connection

3 Operating

35 USB operation
36 How to use the Google Assistant
36 – Talk to the Google Assistant
38 – Reference site for Google Assistant Help
39 Control your TV and Sound Bar with Voice command
39 – Available voice commands
41 "LG Sound Bar"
41 – Installing "LG Sound Bar" App
42 Using a BLUETOOTH Wireless Technology
42 – About BLUETOOTH
42 – BLUETOOTH profiles
42 – Listening to Music of a BLUETOOTH Device
45 Other operations
45 – Using your TV remote control
45 – AUTO POWER On/Off
46 – Auto function change
47 Standby mode
47 – Standby mode
47 – Networked standby mode
47 Reset the Speaker

4 Troubleshooting

48 Troubleshooting
48 – General
50 – Network
50 – Application
51 – NOTES to use wireless
51 – NOTES to release Demo mode

5 Appendix

52 File requirement
52 Trademarks and licenses
53 Specifications
55 Handling the Unit
55 Important Information Relating to Network Services

Introduction

Symbol used in this manual

Note

Indicates special notes and operating features.

Caution

Indicates cautions for preventing possible damages from abuse.

Front panel

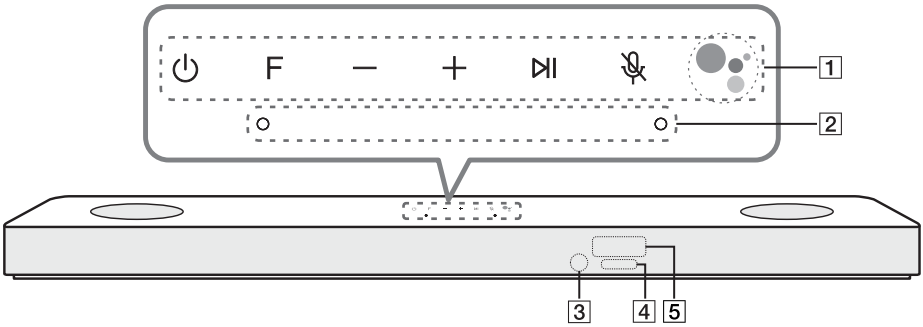

1

(Standby)

- Switches the unit ON or OFF.

F (Function)

- Select the function and input source by pressing **F** repeatedly.

Input source / Function	Display
Wi-Fi	WI-FI
Bluetooth	BT
Optical ARC e-ARC LG Sound Sync (Wired)	OPT/HDMI ARC
HDMI IN	HDMI
USB	USB

You can use **Bluetooth** function after making Wi-Fi network connection by using Google Home app.

+/— (Volume)

- Adjusts volume level.

(Mic mute)

- Disables the detect voice recognition by pressing on the unit. All the Google Assistant LED turns amber and "The mic is muted." is heard.
  To cancel it, press on the unit again. Google Assistant LED turns off and "The mic is back on." is heard.

- Enables Google Assistant to receive your voice commands.
  To cancel it, press again. (Page 36)

2 Microphone

3 Remote sensor

4 Google Assistant LED
- Changes LED status according to Google Assistant performance.

LED	Status	Description
○ ○ ○ ○	All four LEDs are on.	Ready to listen to your voice command.
○ ○ ○ ○	All four LEDs blink.	Responds to your voice command.
● ● ● ●	Microphone is off and the solid amber LED will be on.	Voice recognition is disable

5 Display Window
- Display window will be darkened automatically if there is no key input for 15 seconds. When you press any button, the display window will brighten.

Precautions in using the touch buttons

- Use the touch buttons with clean and dry hands.
  - In a humid environment, wipe out any moisture on the touch buttons before using.
- Do not press the touch buttons hard to make it work.
  - If you apply too much strength, it can damage the sensor of the touch buttons.
- Touch the button that you want to work in order to operate the function correctly.
- Be careful not to have any conductive material such as metallic object on the touch buttons. It can cause malfunctions.

This unit will turn itself off to save electric consumption when the main unit is not connected to an external device and is not used for 15 minutes.

Rear panel

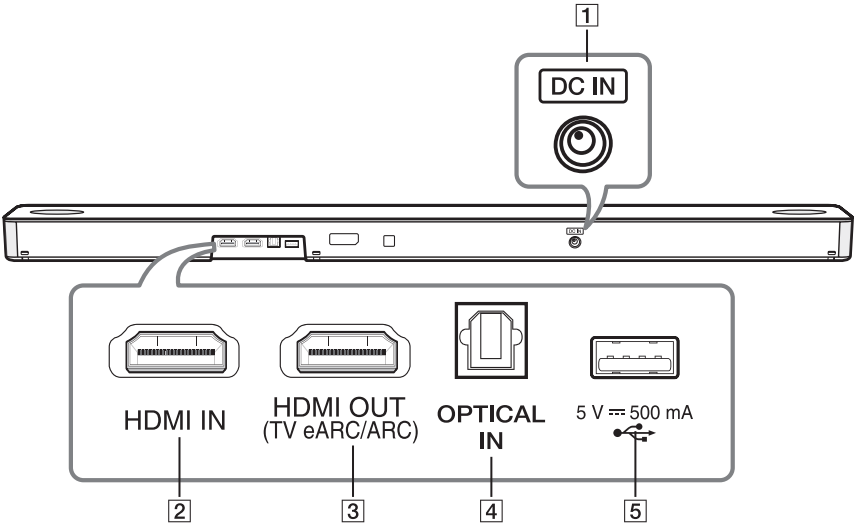

1	**DC IN** - Connect to the AC adapter.
2	**HDMI IN** - Connect HDMI IN jack on the back of the unit to HDMI OUT jack on the external device. You can enjoy the sound and picture from HDMI connection on an external device.
3	**HDMI OUT (TV eARC/ARC)** - Connect the HDMI OUT (TV eARC/ARC) jack on the back of the unit to ARC jack on the TV.
4	**OPTICAL IN** - Connect the OPTICAL IN jack on the back of the unit to OPTICAL OUT jack on the TV.
5	USB Port - Connect USB memory device to the USB port on the back of the unit.

Remote control

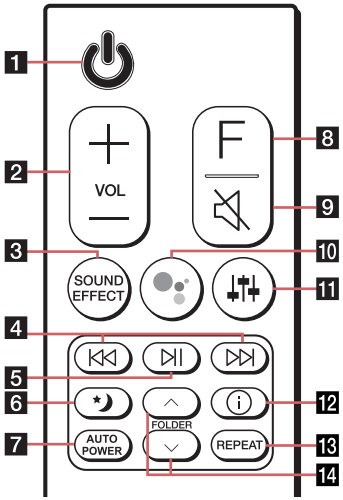

Replacement of Battery

Remove the battery cover on the rear of the remote control, and insert the battery with ⊕ and ⊖ matched correctly.

Risk of fire or explosion if the battery is replaced by an incorrect type.

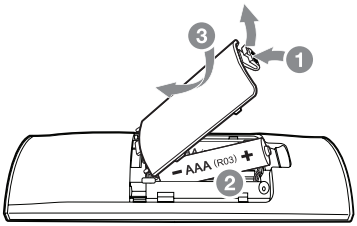

1	⏻ (Standby) - Switches the unit ON or OFF. • **Networked standby:** It allows the unit to switch to standby mode. To turn on Networked standby function, Press ⏻. To turn off Networked standby function, press ⏻ for about 3 seconds.
2	**VOL** (Volume) **+ / —** - Adjusts speaker volume.

3

SOUND EFFECT

- Selects a sound effect mode by using **SOUND EFFECT**.

On Display	Description
AI SOUND PRO	Analyzes the property of the input sound and provides the sound optimized for the content in real time.
BASS BLAST or BASS BLAST+	Reinforces the bass and powerful sound.
STANDARD	You can enjoy premium sound with MERIDIAN technology.
MOVIE	You can enjoy more immersive and cinematic surround sound.
MUSIC	You can enjoy more good sound for music source.

When this unit detects DOLBY ATMOS or DTS:X stream, you cannot change sound effect to any other. In this case, even though you press **SOUND EFFECT**, this unit does not respond. And you can see only "NOT SUPPORTED" on the display window.

- **TV remote:** It allows you to control the volume of this unit by your TV remote control even by other company's product. (Page 45)
  To turn on or off the TV Remote function, press and hold **SOUND EFFECT** for about 3 seconds and press it again.

Supported TV brands

LG	Panasonic	Philips	Samsung	Sharp	Sony	Toshiba	Vizio

4

⏮ / ⏭ (Skip)

- Press ⏮ or ⏭ to go to next or previous file.

5

⏯ (Play/Pause)

- Starts playback. / Pauses playback.

6

(Night time)

- It is useful when you want to watch movies at low volume late at night. It makes to reduce the sound intensity and improve fineness and softness.
  Press to activate Night time mode. To cancel it, press again.

7

AUTO POWER

- It allows the unit to turn on and off automatically by input signal: Optical (Page 45)

8

F (Function)

- Select the function and input source by pressing **F** repeatedly.

9

🔇 (Mute)

- Press 🔇 to mute your unit. To cancel it, press 🔇 again.

10

- Enables Google Assistant to receive your voice commands **while watching TV (not necessary when listening to music through Wi-Fi or Bluetooth, you can just say "Hey Google")**.
  To cancel it, press again. (Page 36)

11

(Sound tuning)

- Adjusts sound level of each speaker.
  Select the speaker you want to adjust by using and adjust the sound level by using **VOL + / —**.

Adjusting rear speakers level is applied only when the rear speakers are connected.

See the page 13 for more information of speakers.

Display	Description	Range
WF	Sub Woofer	-15 ~ 6
C	Center	-6 ~ 6
OVC	Overhead Volume Control	-6 ~ 6
R	Rear	-6 ~ 6
TRE	Treble	-5 ~ 5
BAS	Bass	-5 ~ 5

- **Surround sound:** It allows you to enjoy surround sound with rear speakers. (Page 22)
  To turn on or off the surround sound, press and hold for about 3 seconds and press it again.

12

(Information)

- You can display various information of the input source by pressing .
  - Wi-Fi: Connected Application name
  - BT (**Bluetooth**): Connected **Bluetooth** device name
  - OPT (Optical)/ARC/E-ARC/HDMI (HDMI IN): Audio format
  - USB: File information contained on a USB.

13

REPEAT

- Press **REPEAT** to select desired repeat or random mode.

14

FOLDER ∧ / ∨

- Searches a folder on USB device.

Speakers position

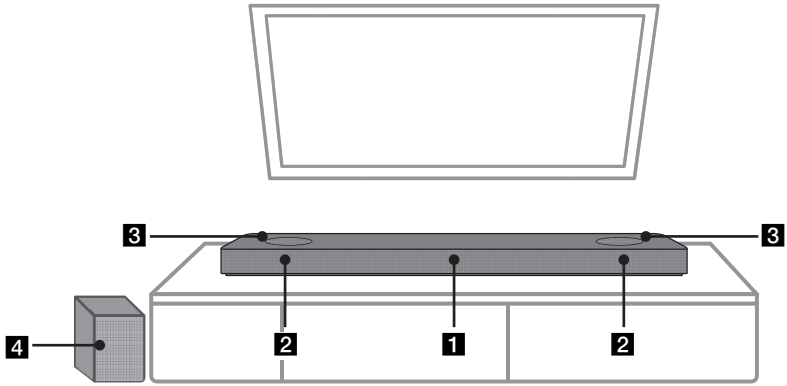

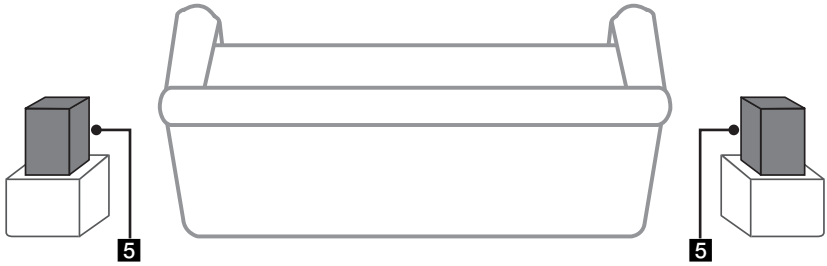

1	Center speaker
2	Front speakers
3	Top speakers
4	Subwoofer
5	Rear speakers

You can enjoy surround sound by using Wireless Rear Speaker kit. Wireless Rear Speakers Kit sold separately (SPK8-S).

Installing the sound bar

You can hear the sound by connecting the unit to the other device: TV, Blu-ray disc player, DVD player, etc.

Place the unit in front of the TV and connect it to the device you want. (Pages 26 - 32)

You can place the wireless subwoofer anywhere in your room. But it is better to place the subwoofer near the main unit. Turn it slightly toward the center of the room to reduce the wall reflections.

For the best surround sound, place the speakers as shown below.

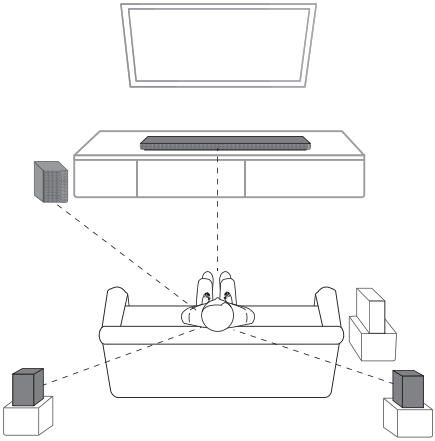

Note

- If the sound bar covers the remote sensor of the TV, please separate distance between the sound bar and TV by 10 ~ 15 cm or more.
- The illustration above may differ from actual units.
- You can enjoy surround sound by using Wireless Rear Speaker kit. Wireless Rear Speakers Kit sold separately (SPK8-S).

Caution

- For best performance of wireless connection such as **Bluetooth** or wireless subwoofer, do not install the unit on Metallic furniture because wireless connection communicates through a module positioned on the bottom of the unit.
- Be careful not to make scratches on the surface of the Unit /Subwoofer when installing or moving them.

Mounting the unit on a wall

Caution

- Do not install this unit upside down. It can damage the parts of this unit or be the cause of personal injury.
- Do not hang onto the installed unit and avoid any impact to the unit.
- Secure the unit firmly to the wall so that it does not fall off. If the unit falls off, it may result in an injury or damage to the product.
- When the unit is installed on a wall, please make sure that a child does not pull any of connecting cables, as it may cause it to fall.

You can mount the main unit on a wall.

Caution

Because it is difficult to make a connection after installing this unit, you should connect the cables before installation.

Preparation materials

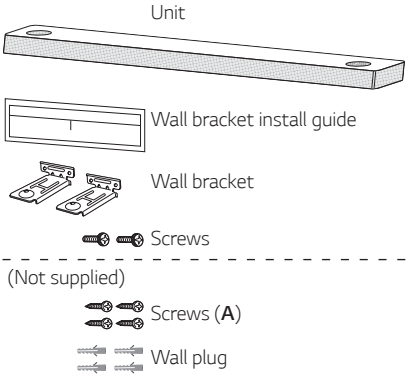

Note

Screws (**A**) and Wall Plugs are not supplied for mounting the unit. We recommend the Hilti (HUD-1 6 x 30) for the mounting.

1. Match the TV's BOTTOM EDGE of Wall bracket install guide with the bottom of TV and attach to the position.

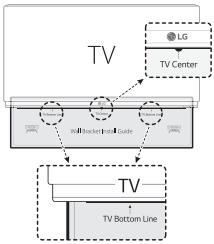

2. When you mount it on a wall (concrete), use the wall plugs. You should drill some holes. A guide sheet (Wall bracket install guide) is supplied to drill. Use the sheet to check the point to drill.

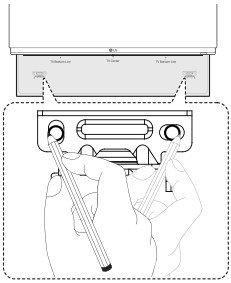

3. Remove the Wall bracket install guide.
4. Fix the brackets with screws (**A**) as shown in the illustration below.

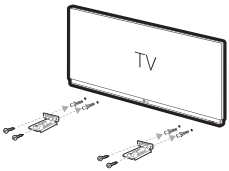

5. Put the unit on the brackets to match screw holes on the bottom of the unit.

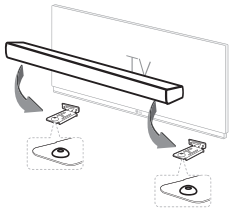

6. Fix the unit with the screws firmly.

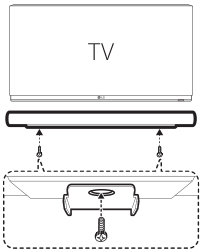

Note

To detach the unit, perform it in reverse order.

Network connection

You can enjoy various functions of this sound bar by connecting to network and your smart device with "Google Home" app.

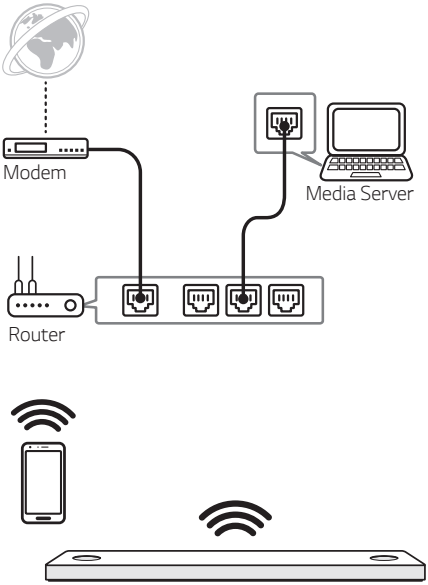

The "Google Home" app is required to connect the sound bar wirelessly to the network.

Note

In a network environment (Router, Internet and Internet Service Provider) that supports both IPv4 and IPv6, the network automatically connects to IPv4 or IPv6 when connecting to the network.
You can check the network status by selecting the setting ([Setting] > [Device Information and Reset]) on the "LG Sound Bar" app.

Installing "Google Home" App

The "Google Home" app allows you to use various functions of this speaker through your smart device.

Requirements before setup

- A wireless router must be connected to the internet. A smart device such as Android or iOS devices must be connected to the wireless router via Wi-Fi connection.
- It needs Google account to use this app. During connect Wi-Fi, this app may request to create Google account.

Through "Google Play" or "App Store"

1. Tap the"Google Play Store" icon or "App Store" icon on your smart device.
2. Type in "Google Home" in the search bar and tap "Search" on "Google Play" or "App Store"
3. Select "Google Home" in the search result list to download.

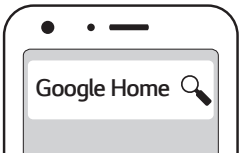

Note

- Depending on the device version, "Google Home" app may not work.
- For more information, visit the web site. https://www.google.com/cast/setup/

Launch the app to connect Wi-Fi

Make sure your smart device Wi-Fi feature is turned on. Once a connecting operation is performed, it does not need to be performed again.

Note

In case of iOS devices, it should be turned on **Bluetooth** setting on your smart device.

1. Tap the "Google Home" icon to launch the app.

2. Follow the screen on app to set speaker. Follow these instructions in order.

Note

- Use the same Wi-Fi connection to set the speaker and your smart device.
- If the **Bluetooth** setting turned on your smart device, it will be easy to connect Wi-Fi.
- During installation, you should create a speaker name. It is needed when pairing the **Bluetooth** device. You can check and edit the speaker name. Follow the "Edit speaker name". (Page 44)
- For more information on the setup, visit the web site. https://support.google.com/assistant/answer/7538816

3. When the speaker is properly connected to Wi-Fi, "CONNECTED" will appear on the display window with sound.

Note

- Depending on wireless router status, it might not work well Wi-Fi connection.
- It is recommended that you use Wi-Fi Group Play with less than 5 speakers.
- "Google Home" app is provided by Google. It might be revised by a change of Google Policy.
- For more information (Set up, Usage, Help etc.), research "Google Assistant Help" or visit the web site. http://support.google.com/assistant
- The speaker may not be available for use on some functions from the "Google Assistant Help" site. (Page 38)
- The speaker is not compatible with "Smart ThinQ" app. Therefore it is not available in setup and cannot be controlled by using "Smart ThinQ" app.

Organizing cables (Optional)

You can organize the cable with cable ties.

1. Hold the cables together with cable ties as shown below.
2. Tighten cable ties.

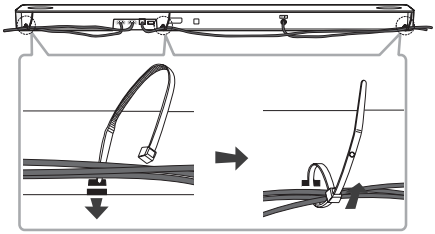

Note

- After all connections are completed, you can arrange cables as needed.
- Cable ties are not provided.

Connecting the AC Adapter

Connect the sound bar to the power supply with the supplied AC adapter.

1. Connect the supplied AC power cord to the AC adapter.
2. Connect the AC adapter cable to DC IN adapter input.
3. Plug the AC power cord into an AC outlet.

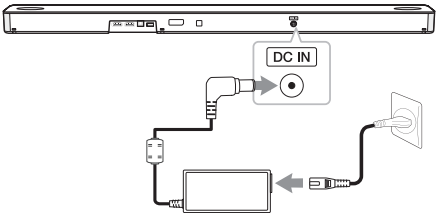

Caution

Only use the AC adapter supplied with this device. Do not use a power supply from another device or manufacturer. Using any other power cable or power supply may cause damage to the device and void your warranty.

Wireless subwoofer and rear speaker (Sold Separately) connection

Wireless subwoofer connection

LED indicator of wireless subwoofer

LED Color	Status
Green (Blink)	The connection is trying.
Green	The connection is completed.
Red	The wireless subwoofer is in standby mode or the connection is failed.
Off (No display)	The power cord of wireless subwoofer is disconnected.

Setting up the wireless subwoofer for the first time

1. Connect the power cord of the sound bar and the wireless subwoofer to the outlet.
2. Turn on the sound bar. The sound bar and the wireless subwoofer will be automatically connected.
   - Pairing is completed. The green LED on the rear of the wireless subwoofer turns on.

Manually pairing wireless subwoofer

When your connection is not completed, you can check red LED on the wireless subwoofer and the wireless subwoofer does not make sound. To solve the problem, follow the steps below.

1. Press **Pairing** on the rear of the wireless subwoofer.

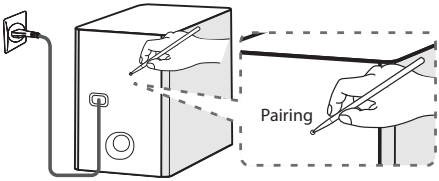

   - The green LED on the rear of the wireless subwoofer blinks quickly.
     (If the green LED does not blink, press and hold the **Pairing**.)
2. Turn on the sound bar.
   - Pairing is completed. The green LED on the rear of the wireless subwoofer turns on.

Note

- It takes a few seconds (and may take longer) for the main unit and the subwoofer to communicate with each other and make sounds.
- The closer the main unit and the subwoofer, the better sound quality. It is recommended to install the main unit and the subwoofer as close as possible and avoid the cases below.
  - There is an obstacle between the main unit and the subwoofer.
  - There is a device using same frequency with this wireless connection such as a medical equipment, a microwave or a wireless LAN device.
  - Keep the sound bar and the subwoofer away from the device (ex. wireless router, microwave oven, etc.) over 1 m to prevent wireless interference.

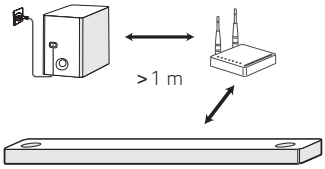

Rear speakers connection (Sold Separately)

Connecting the rear speakers

1. Connect the black stripe wire to the terminal marked - (minus) and the other end to the terminal marked + (plus).

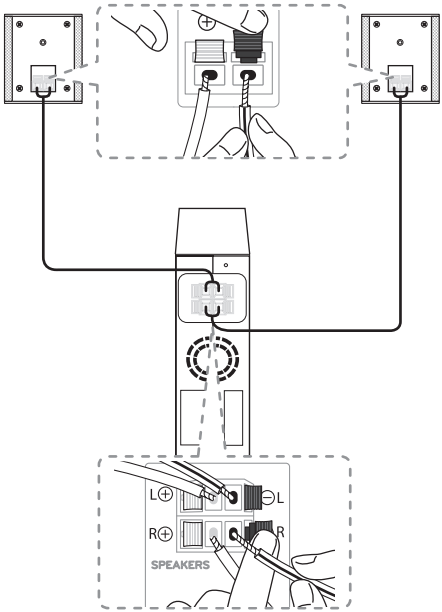

2. Connect the wireless receiver and the rear speakers (left, right) with the speaker cables.

Color	Position
Blue	Rear left
Grey	Rear right

Note

You need to purchase the wireless rear speakers kit (SPK8-S) to enjoy surround sound.

Caution

- Use the speaker supplied with this unit only. Using any other speaker may cause malfunction.
- Be sure to match the speaker cable to the appropriate terminal on the components: + to + and – to –. If the cables are reversed, the sound will be distorted and will lack bass.

LED indicator of wireless receiver

LED Color	Status
Yellow - green (Blink)	The connection is trying.
Yellow - green	The connection is completed.
Red	The wireless receiver is in standby mode or the connection is failed.
Off (No display)	The power cord of wireless receiver is disconnected.

Setting up the wireless receiver for the first time

1. Connect the power cord to the wireless receiver to the outlet.
2. Turn on the main unit: The sound bar and wireless receiver will be automatically connected.
   - Yellow - green LED on the wireless receiver turns on.

Manually pairing wireless receiver

When your connection is not completed, you can see the red LED on the wireless receiver and rear speakers do not make sound. To solve the problem, follow the below steps.

1. Press **PAIRING** on the rear of the wireless receiver.

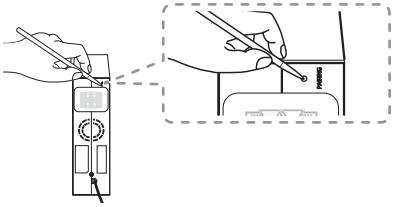

   - The yellow - green LED on the wireless receiver blinks quickly.
2. Turn on the main unit
   - Paring is completed. The yellow - green LED on the wireless receiver turns on.

Surround sound

You can enjoy magnificent surround sound for all the input sound source with rear speakers.

If you turn on the surround function, the whole speaker outputs sound.
When you turn off the surround function, the speakers output sound as an original input sound channel.

To turn on surround function, press and hold on the remote control for about 3 seconds and press it once again while “OFF - SURROUND” is scrolled.

To turn off surround function, press and hold on the remote control for about 3 seconds and press it once again while “ON - SURROUND” is scrolled.

Surround function ON

Sound Effect	Input	Output	
		No rear speakers	Rear speakers connected
AI SOUND PRO	2.0 Ch		
	5.1 Ch		
	7.1 Ch or more		
BASS BLAST or BASS BLAST+	2.0 Ch		
	5.1 Ch		
	7.1 Ch or more		
STANDARD	2.0 Ch		
	5.1 Ch		
	7.1 Ch or more		
MOVIE	2.0 Ch		
	5.1 Ch		
	7.1 Ch or more		
MUSIC	2.0 Ch		
	5.1 Ch		
	7.1 Ch or more		

Surround function OFF

Sound Effect	Input	Output	
		No rear speakers	Rear speakers connected
AI SOUND PRO	2.0 Ch		
	5.1 Ch		
	7.1 Ch or more		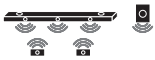
BASS BLAST or BASS BLAST+	2.0 Ch		
	5.1 Ch		
	7.1 Ch or more		
STANDARD	2.0 Ch		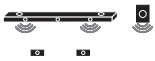
	5.1 Ch		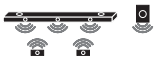
	7.1 Ch or more		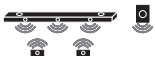
MOVIE	2.0 Ch		
	5.1 Ch		
	7.1 Ch or more		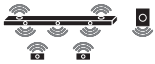
MUSIC	2.0 Ch		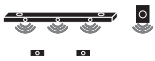
	5.1 Ch		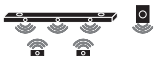
	7.1 Ch or more		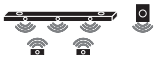

How to Affix the Ferrite Core

Ferrite core may not be provided depending on each nation's regulations.

Affix the Ferrite Core for speaker cables

You must affix a ferrite core in order to reduce or eliminate electrical interference.

1. Pull the stopper [a] of the ferrite core to open.
2. Wind the speaker cables around the ferrite core twice.
3. Close the ferrite core until it clicks.

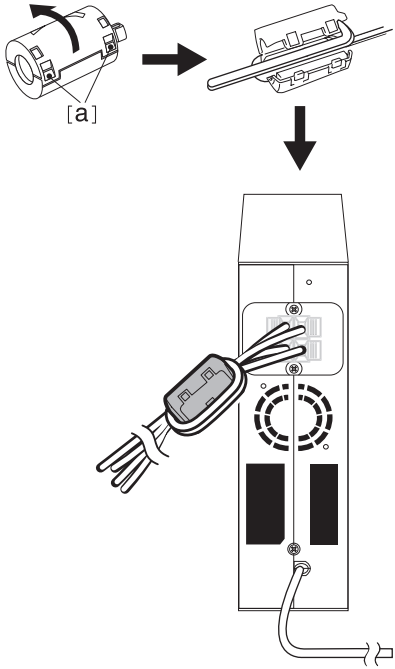

Note

- If there is a strong electromagnetic wave product nearby, interference may occur. Put the main unit and wireless receiver away from there.
- The wireless receiver will automatically switch to standby mode in a few minutes after the sound bar is turned off.
  When the wireless receiver is in standby mode, the LED will turn on in red.
- When you turn on the sound bar, the wireless receiver will turn on and the LED will change to yellow - green and then the rear speakers makes sound within a few seconds.
- It takes a few seconds (and may take longer) for the main unit and Wireless Receiver to communicate with each other.
- Use the rear speaker at least 30 cm away from either TV screen or PC monitor.
- When the wireless receiver is being connected or disconnected with the main unit, output sound is maybe interrupted.
- Set the distance between the sound bar and the wireless receiver as close as possible and keep them away from the device (ex. wireless router, microwave oven, etc.) over 1 m to prevent wireless interference.

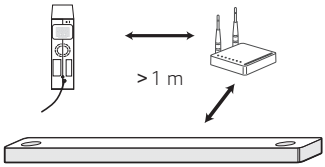

Connecting to your TV

Please connect with this unit and TV using the optical digital cable or HDMI cable considering the state of the TV.

Using an OPTICAL cable

1. Connect the OPTICAL IN jack on the back of the unit to OPTICAL OUT jack on the TV using an OPTICAL cable.

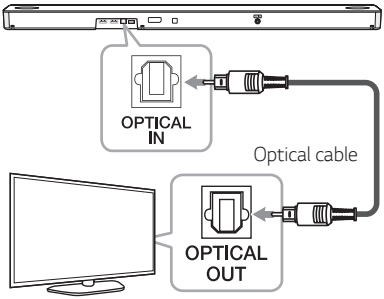

2. Select the input source to OPT/HDMI ARC by pressing **F** repeatedly.

   You can see "OPT" on the display window if connecting normally between this unit and your TV.

Note

- Before connecting the optical cable, be sure to remove the protection plug cover if your cable has the cover.
- You can enjoy the TV audio through the speakers of this unit. In the case of some TV models, you must select the external speaker option from the TV menu. (For details, reference your TV user manual.)
- If this unit is connected by OPTICAL and ARC at the same time, the ARC signal has a higher priority.

LG Sound Sync

Sound Sync

You can control some functions of this unit by your TV's remote control with LG Sound Sync. It is compatible with the LG TV that supports LG Sound Sync. Make sure of the LG Sound Sync logo is on your TV.

Controllable function by LG TV's remote control: Volume up/down, mute

Note

- You can also use the remote control of this unit while using LG Sound Sync. If you use TV's remote control again, the unit synchronizes with the TV.
  According to TV Specifications, the volume and mute of this unit synchronize with TV.
- When the connection fails, make sure of the condition of the TV and power.
- Make sure of the condition of this unit and the connection in the cases below when using LG Sound Sync.
  - The unit is turned off.
  - Changing to another function.
  - Disconnecting the optical cable.
- The amount of time to turn off this unit is different depending on your TV when you set AUTO POWER function to ON.

LG Sound Sync with wired connection

1. Connect your LG TV to the unit by using an optical cable.

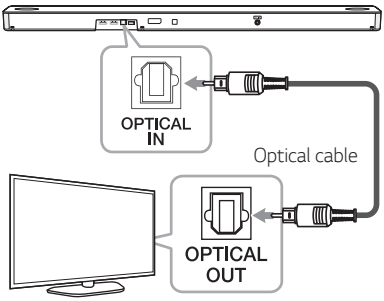

2. Set up the sound output of TV to listen to the sound through this unit:
   (Refer to the TV's instruction manual for the details of LG Sound Sync.)
3. Turn on the unit by pressing ⏻.
4. Select the input source to OPT/HDMI ARC by pressing **F** repeatedly.

   You can see "LGOPT" on the display window if connecting normally between this unit and your TV.

Using an HDMI cable

If you connect this unit to a TV that supports HDMI CEC and ARC (Audio Return Channel), you can enjoy the TV audio through the speakers of this unit without connecting the optical cable.

1. Connect the HDMI OUT (TV eARC/ARC) jack on the back of the unit to ARC jack on the TV using an HDMI cable.

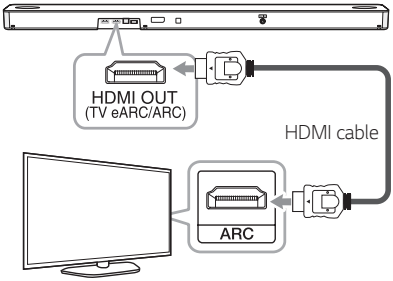

2. Select the input source to OPT/HDMI ARC by pressing **F** repeatedly.

   You can see "ARC" or "E-ARC" on the display window if connecting normally between this unit and your TV.

Note

- You can enjoy the TV audio through the speakers of this unit. In the case of some TV models, you must select the external speaker option from the TV menu. (For details, reference your TV user manual.)
- Depending on your LG TV model, you may need to turn on the SIMPLINK function on your LG TV.
- When you return to ARC function from another function, you need to select the input source to OPT/HDMI ARC. Then this unit changes to ARC function automatically.

ARC (Audio Return Channel) function

The ARC function enables an HDMI capable TV to send the audio stream to HDMI OUT of the unit.

eARC (Enhanced Audio Return Channel) function

eARC (Enhanced Audio Return Channel) features an advancement over the existing ARC (Audio Return Channel) and supports the latest high-bitrate audio formats such as DTS-HD Master Audio™, DTS:X®, Dolby® TrueHD, Dolby Atmos® and more.

You can use your multiple components just by simple connection.

Preparing to Use the eARC or ARC Function

- Your TV must support the HDMI-CEC and eARC or ARC function and the HDMI-CEC and eARC or ARC must be set to On.
- The setting method of HDMI-CEC, eARC or ARC may differ depending on the TV. For details about eARC or ARC function, refer to your TV manual.
- You must use the certified HDMI cable. (page 29)
- You must connect the HDMI OUT on the unit with HDMI IN of the TV that supports eARC or ARC function using an HDMI cable.
- You can connect only one Sound bar to TV compatible with eARC or ARC.

What is SIMPLINK?

Some functions of this unit are controlled by the TV's remote control when this unit and LG TV's with SIMPLINK are connected through HDMI connection.

Controllable functions by LG TV's remote control: Power on/off, volume up/down, etc.

Refer to the TV owner's manual for the details of SIMPLINK function.

LG TV's with SIMPLINK function has the logo as shown above.

Note

- Depending on the state of the unit, some SIMPLINK operation may differ from your purpose or not work.
- Depending on a TV or a player which is connected with this unit, SIMPLINK operation may differ from your purpose.

Additional information for HDMI

- When you connect an HDMI or DVI compatible device make sure of the following:
  - Try switching off the HDMI/DVI device and this player. Next, switch on the HDMI/DVI device and leave it for around 30 seconds, then switch on this player.
  - The connected device's video input is set correctly for this unit.
  - The connected device is compatible with 720 x 576p (or 480p), 1280 x 720p, 1920 x 1080i, 1920 x 1080p, 4096 x 2160p or 3840 x 2160p video input.
- Not all HDCP-compatible HDMI or DVI devices will work with this player.
  - The picture will not be displayed properly with non-HDCP device.

Note

- If a connected HDMI device does not accept the audio output of the player, the HDMI device's audio sound may be distorted or may not output.
- Changing the resolution when the connection has already been established may result in malfunctions. To solve the problem, turn off the player and then turn it on again.
- When the HDMI connection with HDCP is not verified, TV screen is changed to black screen. In this case, check the HDMI connection, or disconnect the HDMI cable.
- If there are noises or lines on the screen, please check the HDMI cable (length is generally limited to 4.5 m).
- You cannot change the video resolution in the HDMI mode. Change the video resolution of the connected component.
- If the video output signal is abnormal when your personal computer is connected to HDMI IN jack, change the resolution of your personal computer to 576p (or 480p), 720p, 1080i or 1080p.

HDMI cable Checklist

Some HDMI cables have poor signal transmission, which can cause problems with sound and video transmission.

Even after HDMI cable connections, if no sound, sound interrupted, noise occurring from the sound bar and/or no video, no smooth video on your TV, the HDMI cable may be the problem.

Use the cable marked with the premium HDMI certification logo. We recommend using "High Speed HDMI Cable with Ethernet" or later version.

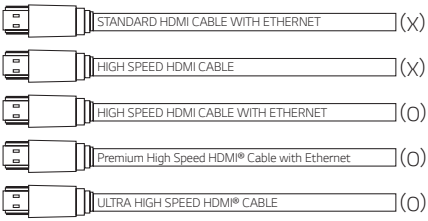

Connection through HDMI Cable*

Your television must support the newest HDMI features (HDMI CEC[1)] / ARC (Audio Return Channel)) to fully enjoy the Live broadcasting channel with audio system through an HDMI cable. Unless your TV supports these HDMI features, the audio system should be connected through an OPTICAL cable.

1) HDMI CEC (High-Definition Multimedia Interface Consumer Electronics Control)

Consumer Electronics Control (CEC) is an HDMI feature designed to allow the user to command and control the CEC-enabled devices, that are connected through HDMI by using only one of their remote controls.

* Trade names for CEC are SimpLink (LG) , Anynet+ (Samsung), BRAVIA Sync (Sony), EasyLink (Philips), etc.

Optional equipment connection

DOLBY ATMOS®

What is DOLBY ATMOS®?

Dolby Atmos gives you amazing experience you've never before by overhead sound, and all the richness, clarity, and power of Dolby sound.

DTS:X®

What is DTS:X®?

In the real world, sound is all around us, moving freely in any direction. DTS:X® is immersed in this natural, multi-dimensional sound experience as we go about our daily lives.

For using DOLBY ATMOS® and DTS:X®

- To enjoy content containing Dolby Atmos® and DTS:X®, the connected device and content must support Dolby Atmos® and DTS:X®.
- DOLBY ATMOS® is available only in HDMI and ARC mode.
- DTS:X® is available only in HDMI and ARC mode.
- It is needed to set up an audio output on external devices (Blu-ray disc player, TV etc.) to "No encoding" such as "Bitstream", "Auto" or "Bypass".
  - If you can select audio output sampling rate, set it to 192 kHz.
- If your TV does not support DTS sound source, connect the playback (source) device to the HDMI IN or OPTICAL IN jack on the soundbar to listen to DTS audio.

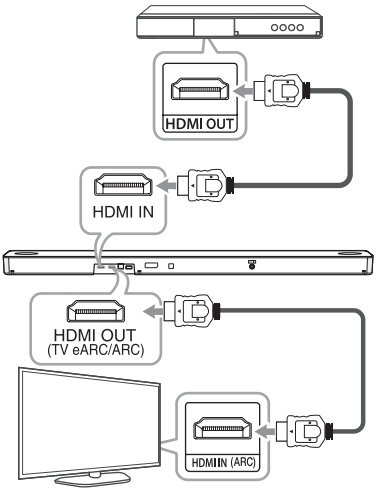

1. Connect HDMI IN jack on the back of the unit to HDMI OUT jack on the external device such as Blu-ray disc player, DVD player, etc.
2. Connect HDMI OUT (TV eARC/ARC) jack on the back of the unit to HDMI IN (ARC) jack on the TV.
3. Select the input source to HDMI or OPT/HDMI ARC by pressing **F** repeatedly.
   - If you select HDMI, you can hear the sound from the external device. Select it when playing the external device.
   - If you select OPT/HDMI ARC, you can hear the sound from your TV. Select it when watching the TV.

   You can see "DOLBY ATMOS" or "DTS:X" on the display window if connecting normally between this sound bar and your TV and the contents is played.

Note

- DOLBY ATMOS®/DTS:X® supports 3.1.2 channel. (5.1.2 channel when it connected with Rear kit)
- If the sound bar does not have sound or the video on TV is not smooth, the HDMI cable may be the problem. Refer to the HDMI cable checklist. (Page 29)

HDMI IN connection

You can enjoy the sound from the external device which is connected to HDMI IN jack on this unit.

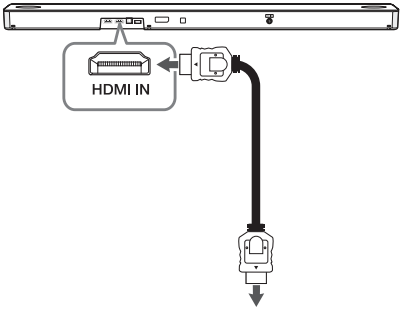

To the Blu-ray disc player, DVD player, etc.

1. Connect HDMI IN jack on the back of the unit to HDMI OUT jack on the audio device such as Blu-ray disc player, DVD player, etc.
2. Select the input source to HDMI by pressing **F** repeatedly.

OPTICAL IN connection

Connect an optical output jack of external devices to the OPTICAL IN jack.

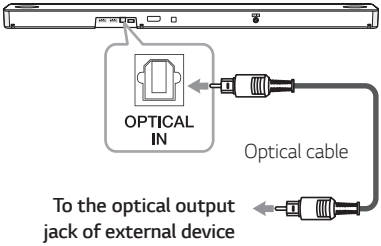

1. Connect the OPTICAL IN jack on the back of the unit to optical out jack of your external device.
2. Select the input source to OPT/HDMI ARC by pressing **F** repeatedly.

   You can see "OPT" on the display window if connecting normally between this unit and your device.

Note

Before connecting the optical cable, be sure to remove the protection plug cover if your cable has the cover.

Caution

Make sure to properly align and connect the optical cable; improper alignment may cause damage to the jack.

Optical jack Optical cable Optical jack Optical cable

<O> <X>

Optional equipment connection

You can enjoy both sound and picture from the external device you connect.

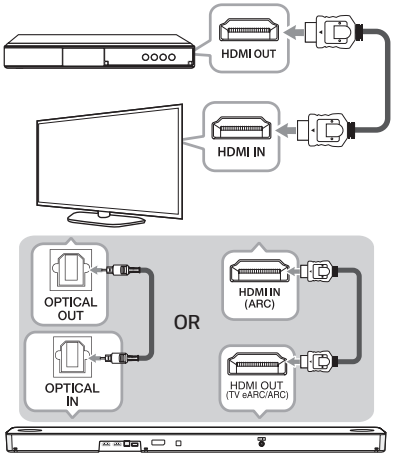

1. Connect HDMI IN jack of your TV to HDMI OUT jack on the external device such as Blu-ray disc player, DVD player, etc.
2. Connect the OPTICAL IN jack on the back of the unit to OPTICAL OUT jack on the TV using an OPTICAL cable.

   Or connect the HDMI OUT (TV eARC/ARC) jack on the back of the unit to HDMI IN (ARC) jack on the TV using an HDMI cable.
3. Select the input source to OPT/HDMI ARC by pressing **F** repeatedly.

Note

If the sound bar does not have sound or the video on TV is not smooth, the HDMI cable may be the problem. Refer to the HDMI cable checklist. (Page 29)

USB connection

Connect USB memory device to the USB port on the back of the unit.

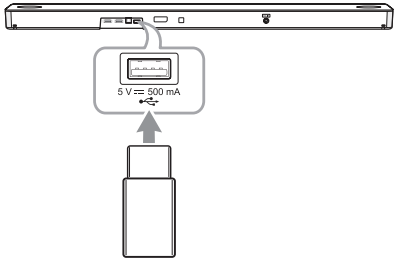

For more information of playing files on a USB, refer to the page 35.

Removing the USB Device from the unit

1. Choose a different function/mode.
2. Remove the USB device from the unit.

Compatible USB devices

- MP3 Player: Flash type MP3 player.
- USB Flash Drive: Devices that support USB 2.0.
- The USB function of this unit does not support some USB devices.

USB device requirement

- Devices which require additional program installation connected to a computer, are not supported.
- Do not extract the USB device while in operation.
- For a large capacity USB, it may take longer than a few minutes to be searched.
- To prevent data loss, back up all data.
- The unit's USB Port cannot be connected to PC. The unit can not be used as a storage device.
- The exFAT file systems are not supported on this unit. (FAT16/FAT32/NTFS systems are available.)
- Depending on some devices, it may not available to recognize the followings on this unit.
  - External HDD
  - Card readers
  - Locked devices
  - Hard type USB devices
  - USB hub
  - Using USB extension cable
  - iPhone/iPod/iPad
  - Android device

Playable file

Sampling Frequency

MP3: within 32 to 48 kHz
OGG: within 32 to 48 kHz
AAC: within 32 to 48 kHz
FLAC: 32 kHz, 44.1 kHz, 48 kHz, 88.2 kHz, 96 kHz, 176.4 kHz and 192 kHz (16 bit/ 24 bit)
WAV: 32 kHz, 44.1 kHz, 48 kHz, 88.2 kHz, 96 kHz, 176.4 kHz and 192 kHz (16 bit/ 24 bit)

Bitrate resolution

MP3: within 8 to 320 kbps
OGG: within 64 to 320 kbps
AAC: within 8 to 320 kbps

- Maximum files: Up to 2,000
- Maximum directories: Up to 200
- A protected file by DRM (Digital rights management) cannot be played on the unit.
- Video files in the USB storage device can not be played.
- Depending on the performance of your USB device, playback may not work well.

Note

- Folders and files on the USB are recognized as below.

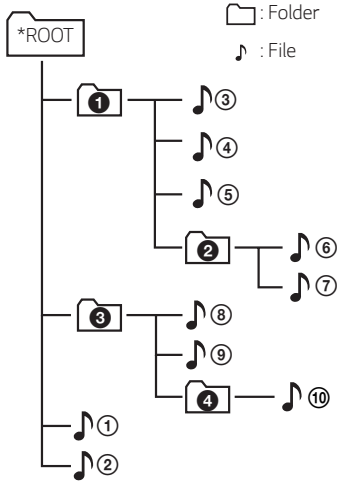

- If there is no file in a folder, the folder will not appear.
- File will be played from file ♪① to file ♪⑩ one by one.
- Files will be played in order recorded and it may be different depending on the record circumstances.
- This unit can display file or folder names that contain numbers or English characters only.
- *ROOT: The first screen you can see when a this unit recognize the USB is "ROOT".

USB operation

1. Connect the USB device to the USB port.
2. Select the USB function by pressing **F** repeatedly.

To	Do this
Playback	Press ▷II.
Pause	During playback, press ▷II.
Skip to the next/ previous file	During playback, press ▷▷I on the remote control to go to the next file. Playing less than 3 seconds, press I◁◁ on the remote control to go to the previous file. Playing after 3 seconds, press I◁◁ on the remote control to go to the beginning of the file.
Play repeatedly or randomly	Press **REPEAT** on the remote control repeatedly. Refer to the note for details about the display change.
Search a folder	Press **FOLDER** ∧ / ∨ on the remote control.

Note

- The resume point may be cleared when you pull out the power cord or removing the USB device from the unit.
- Repeat/Random playback operates as follows.

On Display	Description
OFF	Plays songs on USB device in order.
ONE	Plays a same song repeatedly.
FOLDER	Plays songs in a folder repeatedly.
ALL	Plays all the songs on USB device repeatedly.
SHUFFLE	Plays all the songs once randomly, and stops the playback.

How to use the Google Assistant

Talk to the Google Assistant

You can use a variety of voice commands to control this speaker with the Google Assistant. Try to say a voice command to the speaker. The speaker will activate the Google Assistant and perform your voice command.

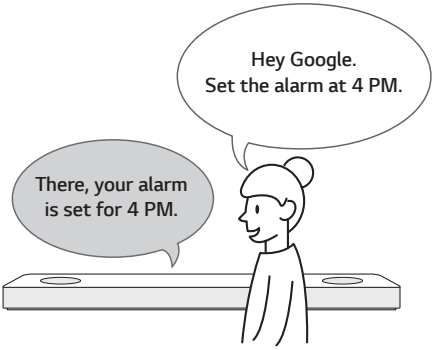

1. Turn on the speaker and connect Wi-Fi. (Page 18)
2. Say "Hey Google" or press
   Then the speaker is activated and ready to receive your voice commands.

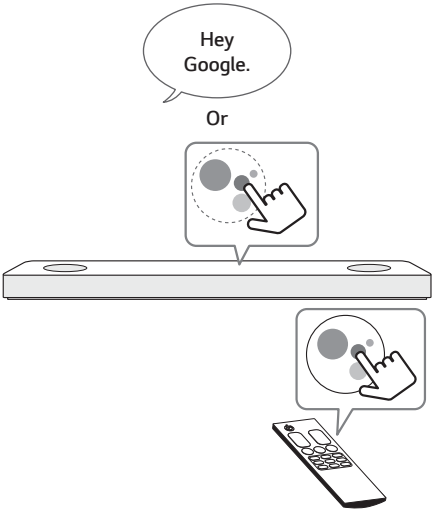

3. Just say the thing you want to do. Then the speaker recognizes and performs your voice command.
4. After a few seconds, the Google Assistant will respond to your command.

Note

- The Google Assistant only responds to voice commands when you are using Wi-Fi or BT (**Bluetooth**) as the input.
  If you are using HDMI, Optical, ARC, Optical Sound Sync, or USB input, then you must use the button to activate the Google Assistant.
- Each time you use voice recognition, say "Hey Google" or press

Comfortable Function

With the Google Assistant built in, you can control compatible smart home devices such as TV's, lights, switches, plugs, thermostats and more by simply using your voice.

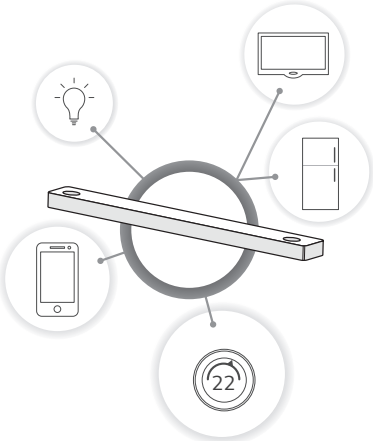

For more information, visit the below web site.

- **Set up, Usage and more:** http://support.google.com/assistant/answer/7540703
- **Compatible LG appliance models:**
  Visit http://www.lg.com and then search the information

Voice command

1. Time
   "What time is it?", "What time is it now?", "What time is it in Spain?"
2. Weather
   "What's the weather?", "What's the weather this weekend?", "What's the weather in Paris?", "Will it rain tomorrow?"
3. Plan
   "Tell me about my day.", "What's my next meeting?", "Set a reminder to check schedule at 6pm."
4. Alarms
   "Set an alarm" , "Set an alarm for 9am", "Wake me up at 9am", "What alarms are set?"
5. Music
   "Play the music.", "Next song.", "Previous song.", "Pause the music"
6. Volume
   "Volume level 3.", "Maximum volume.", "Mute.", "Turn it up", "Turn it down"
7. Smart Home devices
   "Set the heat to 22"
   "Turn on lights in the kitchen"
   "Watch on TV"

Note

- For more information on the voice commands, refer to the "Google Home" app screen or visit the web site. http://support.google.com/assistant
- **Voice command of Volume level change**
  - The volume range of this unit is 1-40. (Except LGOPT function. In LGOPT function, the volume range works 1-100.)
  - Google Assistant recognizes voice command of volume level change as a scale (1-10) or a percentage (1-100 %)
  - For example, if you say "Volume level five." the volume level of this unit changes to 20. If you say "Volume to 65 %.", it changes to 26.
  - Volume level increases or decreases by 10 % (i.e. 4) when you say, "volume up" or "volume down".
  - When you say numbers of 10 and less, it is recommended to say "percent" to prevent too loud sound.

Note

- After connecting to Wi-Fi, this function is available to use. If Google Assistant LED (White) blinks, the speaker is not connected to Wi-Fi. Follow the "Installing "Google Home" App" and try again. (Page 17)
- If the Google Assistant LED is solid amber, the microphone is off. In that case, the Google Assistant is not available to receive your comment. Press on the unit.
- If the Google Assistant fails to understand your commands, it will say answers such as "Sorry, I can't help with that yet", "My apologies. I don't understand."
- Avoid noisy places, because the speaker may not receive your commands or "Hey Google". Instead of "Hey Google", press .
- When the voice recognition time limit is exceeded on smart devices, this function automatically cancels.
- Speaking with correct pronunciation will increase the voice recognition rate.
- The Google Assistant may be slow to recognize or act depending on the Wi-Fi connection status or Google server status.
- If you have any trouble or question about Google Assistant, please suggest by saying "Hey Google, Feedback". It would be helpful for improving Google Services.

Reference site for Google Assistant Help

Set up the Google Assistant on your speakers	https://support.google.com/assistant/answer/7538816
Listen to music	https://support.google.com/assistant/answer/7539710
Play music on your TV or speakers	https://support.google.com/assistant/answer/7539867
Play TV shows & movies	https://support.google.com/assistant/answer/7539991
Control smart home devices	https://support.google.com/assistant/answer/7540703
Create a shopping list	https://support.google.com/assistant/answer/7540969
Buy items on your shopping list	https://support.google.com/assistant/answer/7384588#speaker
Set up and manage My Day	https://support.google.com/assistant/answer/7393908#speaker
Listen to radio	https://support.google.com/assistant/answer/7540307
Control volume of your speakers	https://support.google.com/assistant/answer/7538817
Change your language	https://support.google.com/assistant/answer/7394513#speaker

Control your TV and Sound Bar with Voice command

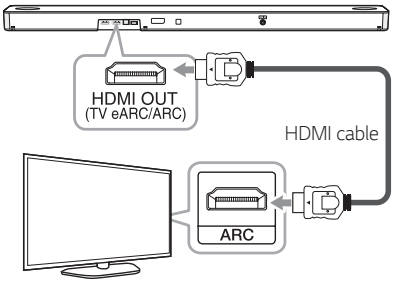

1. Connect your Sound Bar to Wi-Fi by using Google Home app.
2. Connect your Sound Bar and TV by using an HDMI cable.
3. Say a voice command. See the following tables.

Note

- You have to say voice commands in English.
- Available TV: Web OS version 4.5 or later TV (LG TV models released after 2019 years)
- Available voice commands might be revised by a change of Google Policy.
- Speaks the voice commands with accurate and clear pronunciation.

Available voice commands

LG TV

Commands	Action
Turn on LG TV Turn LG TV on Power on LG TV Power LG TV on	Turns on your LG TV.
Turn off LG TV Turn LG TV off Power off LG TV Power LG TV off	Turns off your LG TV.
Channel up on LG TV LG TV channel up Next channel on LG TV	Your LG TV changes the channel to up.
Channel down on LG TV LG TV channel down Previous channel on LG TV	Your LG TV changes the channel to down.
Volume up on LG TV LG TV volume up	Volume of your LG TV increases.
Volume down on LG TV LG TV volume down	Volume of your LG TV decreases.
Mute LG TV	Mutes your LG TV
LG TV unmute LG TV mute off	Unmutes your LG TV

Sound Bar

Commands		Action
Turn off LG sound bar Power off LG sound bar		Turns off your LG Sound Bar.
Switch function to Enable function Set function to	Wi-Fi network	Changes to the Wi-Fi function.
	BLUETOOTH	Changes to the BT (**Bluetooth**) function.
	OPTICAL	Changes to the Optical function.
	HDMI ARC	Changes to the HDMI ARC function.
	HDMI	Changes to the HDMI function.
	USB	Changes to the USB function.
Set sound effect	STANDARD	Changes the sound effect to STANDARD.
	AI SOUND PRO	Changes the sound effect to AI SOUND PRO.
	MOVIE	Changes the sound effect to MOVIE.
	MUSIC	Changes the sound effect to MUSIC.
	BASS BLAST (BASS BLAST PLUS)	Changes the sound effect to BASS BLAST (BASS BLAST PLUS).
Display the input source information		Displays the input source information on display window.
Enable Auto volume Disable Auto volume		Turns on Auto volume function. Turns off Auto volume function.
Enable Auto Power Disable Auto Power		Turns on Auto power function. Turns off Auto power function.
Enable Night Time Disable Night Time		Turns on Night time mode. Turns off Night time mode.
Enable DRC Disable DRC		Turns on DRC. Turns off DRC.
Enable TV remote Disable TV remote		Turns on TV remote function. Turns off TV remote function.
Enable Surround Disable Surround		Turns on Surround sound. Turns off Surround sound.
Enable Neural X Disable Neural X		Turns on Neural X. Turns off Neural X.

“LG Sound Bar”

The “LG Sound Bar”app is provided by LG Electronics. This app allows you to use various functions of this speaker through your smart device:

Requirements before using

You should connect to Wi-Fi by using “Google Home” app prior using this app. (Page 18)

Using Chromecast built-in

You can enjoy music contents through this sound bar with Chromecast enabled apps.

Setting and controlling the sound bar

You can manage the sound bar settings and control the sound bar even without remote control.

Requirements

- **A wireless router** must be connected to the internet.
- **A smart device** such as a smartphone or tablet must be connected to the wireless router via Wi-Fi connection.

Note

For more informations of “LG Sound Bar”, follow the instructions of the application.

Installing “LG Sound Bar” App

Through Apple “App Store” or “Google Play Store”

1. Tap the Apple “App Store” icon or “Google Play Store” icon.
2. Type in “LG Sound Bar” in the search bar and tap “Search”.
3. Select “LG Sound Bar” in the search result list to download.

Note

- “LG Sound Bar” app will be available in version of the software as follow;
  Android OS: Ver 5.0 (or later)
  iOS: Ver 10 (or later)
- Depending on the device, “LG Sound Bar” app may not work.

Using a BLUETOOTH Wireless Technology

About BLUETOOTH

Bluetooth is wireless communication technology for short range connection.

The sound may be interrupted when the connection interfered by the other electronic wave or you connect the **Bluetooth** in the other rooms.

Connecting individual devices under **Bluetooth** wireless technology does not incur any charges. A mobile phone with **Bluetooth** wireless technology can be operated via the Cascade if the connection was made via **Bluetooth** wireless technology.

- Available Devices: Smart phone, MP3, Notebook, etc.
- Version: 5.0
- Codec: SBC

BLUETOOTH profiles

In order to use **Bluetooth** wireless technology, devices must be able to interpret certain profiles. This speaker is compatible with following profile.

A2DP (Advanced Audio Distribution Profile)

Listening to Music of a BLUETOOTH Device

Before you start the pairing procedure, make sure that the **Bluetooth** feature on your smart device is turned on. Refer to your **Bluetooth** device's user guide. Once a pairing operation is performed, it does not need to be performed again.

1. Turn on the speaker and connect Wi-Fi. Follow "Network connection". (Page 17-18)
2. Select the **Bluetooth** function by pressing **F** repeatedly.
   "BT" and then "READY" appears in the display window.
3. Operate the **Bluetooth** device and perform the pairing operation. When searching for this speaker on your **Bluetooth** device, a list of the devices found may appear in the **Bluetooth** device display depending on the type of **Bluetooth** device.
   Your speaker appears as "Speaker name (App setup)".
4. Select the "Speaker name (App setup)".

Note

- Speaker name was setup on "Google Home" app. For example, if the speaker name is set to "Living Room" in the "Google Home" app, you will see "Living Room" on your **Bluetooth** device.
- You may check and edit the speaker name on "Google Home" app (Page 44)
- Depending on the **Bluetooth** device type, some devices have a different pairing way. For details about **Bluetooth** pairing, refer to your **Bluetooth** device manual.

5. When this unit is successfully connected with your **Bluetooth** device,
"PAIRED" → your device's name → "BT" appears on the display window.

Note

- If it is unavailable to display device name on the unit, "-" will be displayed.
- To check the connected device's name, press ⓘ on the remote control. The connected **Bluetooth** device's name is displayed.

6. Listen to music.

   To play music in your **Bluetooth** device, refer to your **Bluetooth** device's user guide.

   According to your **Bluetooth** device's volume level, the volume level of **Bluetooth** will be adjusted.

Note

- When using **Bluetooth** technology, you have to make a connection between the unit and the **Bluetooth** device as close as possible and keep the distance.
  However it may not work well in the case below:
  - There is an obstacle between the unit and the **Bluetooth** device.
  - There is a device using same frequency with **Bluetooth** technology such as a medical equipment, a microwave or a wireless LAN device.
- If last connected device is LG TV, this sound bar will connect to the TV automatically when you restart the sound bar.
- If the LG TV is turned off, this sound bar will enter "READY" (**Bluetooth** ready) mode. When the TV is turned back on, the Sound Bar will not reconnect automatically. To connect the Sound Bar and the TV:
  - Say "Hey Google, connect **Bluetooth**"
  - Turn the Sound Bar off and back on.

  Then follow the TV's on screen instructions.
- Available TV: LG TV models released after 2016 and some TVs may not work well.

Note

- This unit supports **Bluetooth** auto pairing. However it does not operate in the case below:
  - When you restart this unit.
  - When you disconnect this unit by yourself.
  - When you disconnect this unit on the connected **Bluetooth** device.
- The sound may be interrupted when the connection is interfered with by the some other electronic wave.
- Pairing is limited to "One" **Bluetooth** device. Multi-Pairing is not supported.
- Depending on the type of the device, you may not be able to use the **Bluetooth** function.
- You can enjoy using **Bluetooth** when using Phone, MP3, Notebook, etc..
- The more distance between the unit and the **Bluetooth** device, the lower the sound quality becomes.
- **Bluetooth** connection will be disconnected when the unit is turned off or the **Bluetooth** device gets to far from the unit.
- If the **Bluetooth** connection is disconnected, connect the **Bluetooth** device again.
- When a **Bluetooth** device is not connected, "READY" appears on the display window.
- If you change to another function after connecting **Bluetooth** device, **Bluetooth** connection will be disconnected. When you return to **Bluetooth** function, **Bluetooth** connection will be connected automatically.
- When one **Bluetooth** device has connected to this unit, another device cannot find and connect to this unit. If you want to connect another device, disconnect the current device and try again.

Using Voice command to connect BLUETOOTH

If the speaker has paired to a **Bluetooth** device before, you can use "Google Assistant" to connect **Bluetooth**. Say "Connect", "Connect to **Bluetooth**" or "Hey **Bluetooth**".

To disconnect it, say "Cancel", "Unpair devices" or "Clear all devices".

Controls connected BLUETOOTH device

You can control the connected **Bluetooth** device from the unit; play, pause, skip, volume.

Note

- Only Android OS and iOS is available to use this function..
- This function may not be supported depending on the **Bluetooth** device or some of TV operated differently.
- You can control connected **Bluetooth** devices by voice recognition. Follow the "How to use Google Assistant" (Page 36).

Edit speaker name

You can check and edit the speaker name on the "Google Home" app.

Other operations

Using your TV remote control

You can control some functions of this unit by your TV remote control even by other company's product. Controllable functions are volume up/down and mute.

Press and hold **SOUND EFFECT** on the remote control for about 3 seconds. "ON - TV REMOTE" appears and you can control this unit by your TV remote control.

To check the status of this function, press and hold **SOUND EFFECT** on the remote control.

To turn off this function, press and hold **SOUND EFFECT** on the remote control and press it once again while "ON - TV REMOTE" is scrolled.

Note

- Make sure that the sound output of your TV is set to [External speaker].
- This function does not operate on LG TV's magic remote control.
- This function may not work well when some TV control functions such as HDMI CEC, SIMPLINK and LG Sound Sync set to ON.
- This function may not work well when the unit and the TV are connected with an HDMI cable.
- Some remote control may not be supported.

AUTO POWER On/Off

This sound bar automatically turns on and off by an input source: Optical

To turn on this function, press **AUTO POWER** on the remote control and press it once again while "OFF - AUTO POWER" is scrolled.

To check the status of this function, press **AUTO POWER** on the remote control.

To turn off this function, press **AUTO POWER** on the remote control and press it once again while "ON - AUTO POWER" is scrolled.

Turning on

When you turn on your TV or an external device connected to this unit, this unit recognizes the input signal and selects the suitable function. You can hear the sound from your device.

Turning off

When the TV is off, this sound bar switches to the Networked standby mode.

Note

- After the unit is turned on by AUTO POWER function, it will be automatically turned off if there is no signal for a certain period of time from the TV connected by LG Sound Sync (Optical).
- After the unit is turned on by AUTO POWER function, it will be automatically turned off if there is no signal for a certain period of time from the external device.
- If you turned off the unit directly, it cannot be turned on automatically by AUTO POWER function. However the unit can be turned on by AUTO POWER function when optical signal comes in after 5 seconds of no signal.
- Depending on the connected device, this function may not operate.
- When you turn on this unit for the first time, status of Auto Power function is turned on.
- You can set the AUTO POWER function only when this unit is turned on.

Auto function change

This sound bar recognizes input signals such as Optical, HDMI ARC, **Bluetooth**, and "LG Sound Bar" app and then changes suitable function automatically.

When you turn on your TV or an external device

When you turn on your TV or an external device connected by the one among Optical, LG Sound Sync (Optical), or HDMI ARC, this sound bar will change to a suitable function so you can listen to the sound through it.

When you try to connect a BLUETOOTH device

When you try to connect your **Bluetooth** device to this unit, **Bluetooth** function is selected. Play your music on the **Bluetooth** device.

Note

This unit does not change the function to optical if SIMPLINK of the connected TV, Bluray disc player, set-top box or etc. device set to on or connected CEC supported device is turned on. If you want to use the auto function change, turn off SIMPLINK function on your LG TV. It takes for about 30 seconds to turn off SIMPLINK.

How to disconnect the wireless network connection or the wireless device

Turn off the unit by pressing the power button for more than 3 seconds.

Standby mode

The speaker switches to the standby mode if there is no music playback or no button operation.

Standby mode

If you press and hold ⏻ for about 3 seconds, the speaker switches to the standby mode. Then "GOOD-BYE" appears on the display window. And all wireless network ports are deactivated.

Networked standby mode

Option 1.

When music is not played and buttons are not pressed for 15 minutes, the speaker switches to the Networked standby mode. Then "GOOD-BYE" appears on the display window.

Option 2.

If you press ⏻, the speaker switches to the Networked standby mode. Then "GOOD-BYE" appears on the display window.

Reset the Speaker

If the speaker doesn't respond, reset the speaker.

Press and hold the 🔇 on the unit until you hear the beep sound once. You can see "RESET" on the display window. Then all the stored wireless network information is deleted.

Troubleshooting

General

Symptoms	Cause & Solution
The unit does not work properly.	• Turn off the power of this unit and the connected external device (TV, Woofer, DVD-player, Amplifier, etc.) and turn them on again. • Disconnect the power cord of this unit and the connected external device (TV, Woofer, DVD-player, Amplifier, etc.) and then try connecting again. • Previous setting may not be saved when device power is shut off.
The power does not turn on.	Is the power cord plugged into the outlet? • Connect the power plug to the outlet.
Sound is not produced.	Is the volume set to minimum? • Adjust the volume. • When you are using connection with a external device (set top box, **Bluetooth** device etc.), adjust volume level of the device. Is the mute function activated? • Press 🔇 or adjust the volume level to cancel the mute function. Is the function selected properly? • Check the input source and select the correct input source.
No woofer sound	Is the subwoofer plugged in? • Plug the power cord of subwoofer into the wall outlet securely. Is pairing between the unit and the subwoofer disconnected? • Connect the unit and the subwoofer. (Page 20)
The remote control does not work properly.	Is the remote control too far from the unit? • Operate the remote control within about 7 m. Is there an obstacle in the path of the remote control and the unit? • Remove the obstacle. Are the batteries in the remote control exhausted? • Replace the batteries with new one.
The AUTO POWER function does not work.	• Check connection of the external device such as TV, DVD/Blu-Ray player. • Check the state of SIMPLINK on your LG TV and turn off SIMPLINK. • Depending on the connected device, this function may not operate.
LG Sound Sync does not work.	• Check whether your LG TV supports LG Sound Sync (Wired). • Check connection of LG Sound Sync (Wired). • Check sound setting of your TV and this unit.

Symptoms	Cause & Solution
When you feel the output sound of the unit is low.	Check the details below and adjust the unit according to them. • Switch the state of DRC function to [OFF] by using "LG Sound Bar". • With the sound bar connected with TV, change the AUDIO DIGITAL OUT setting on TV Setup Menu from [PCM] to [AUTO] or [BITSTREAM]. • With the sound bar connected with Player, change the AUDIO DIGITAL OUT setting on Player Setup Menu from [PCM] to [PRIMARY PASS-THROUGH] or [BITSTREAM]. • Change Audio DRC setting on connected device setup menu to [OFF] state. • Make sure that Night Time mode is not On. Turn off Night Time mode.
USB is not recognized	• Format the USB device and connect it again. When formatting the USB device, select the available file system. (Page 33)
Bluetooth pairing does not work well.	• Be sure your **Bluetooth** device is on. • Switch **Bluetooth** off and on again on your **Bluetooth** device, then try pairing again. • Remove the obstacle in the path of the **Bluetooth** device and the unit. • Depending on the type of the **Bluetooth** device or surrounding environment, your device may not be paired with the unit.
The unit does not connect with **Bluetooth** device.	• Make sure the speaker connects to Wi-Fi by using "Google Home" app.
Voice recognition does not work well.	• The speaker may not be recognized because of the surrounding noise. • Instead of "Hey Google", press . • Check and make sure the microphone is muted. Press on the unit.

Network

Symptoms	Cause & Solution
Cannot connect the speaker to your home network.	• The wireless communication may be interrupted from household devices that are using radio frequencies. Move the speaker away from them. • Check your router. Try turning it off and back on. • Check that the Wi-Fi feature is turned on in your smart device. • Check that the speaker and your smart device are connected to same Wi-Fi.
Wi-Fi connection does not work well.	If you restart the router? • You need to turn the speaker's power off and on again. If you install new router. • You need to perform a factory set and setup the network connection for speaker.

Application

Symptoms	Cause & Solution
The application doesn't work properly.	Does an error occur when accessing the app? • Make sure that your smart device is compatible with the app. • Make sure that the application is the latest version. • Make sure that the connected unit turns on.

NOTES to use wireless

Symptoms	Cause & Solution
This device may have wireless interference.	• Wireless may not operate normally in weak signal area. • Please install the device close enough to wireless subwoofer. • Do not install the device on metal furniture for optimum performance.
Bluetooth device may malfunction or make noise in the following cases.	• When any part of your body contact the transceiver of the **Bluetooth** device or sound bar. • When there is an obstacle or wall or the device is installed in a secluded spot. • When there is a device (a wireless LAN, a medical equipment or a microwave) using same frequency, make the distance between the products as far away as possible each other. • When connecting the device to the **Bluetooth** device, make the distance between the products as close as possible each other. • When the device gets too far from the **Bluetooth** device, the connection is disconnected and also malfunction may occur.

NOTES to release Demo mode

Symptoms	Cause & Solution
Can not change input source with **F** such as BT (**Bluetooth**), HDMI etc. and only [DEMO] indication is showing in the front display.	Unplug the power cord and plug it in again. If that doesn't work, after setting the volume to 2, press and hold **F** (About 5 seconds) on the main unit until the display indicates current selected function.
Remote Control does not work. (No response)	

File requirement

Available File extensions: ".mp3", ".aac", ".ogg", ".flac", ".wav"

Sampling Frequency

MP3: within 32 to 48 kHz
OGG: within 32 to 48 kHz
AAC: within 32 to 48 kHz
FLAC: 32 kHz, 44.1 kHz, 48 kHz, 88.2 kHz, 96 kHz, 176.4 kHz and 192 kHz (16 bit/ 24 bit)
WAV: 32 kHz, 44.1 kHz, 48 kHz, 88.2 kHz, 96 kHz, 176.4 kHz and 192 kHz (16 bit/ 24 bit)

Bitrate resolution

MP3: within 8 to 320 kbps
OGG: within 64 to 320 kbps
AAC: within 8 to 320 kbps

- The file requirements are not always compatible. There may have some restrictions by file features and media server's ability.
- Depending on the types of file or ways of recording, it may not play back.
- Some DRM-loaded files are not supported on this speaker.
- The types of supported files may differ depending on the operating system and/or the manufacturer of the smart device and PC.

Trademarks and licenses

All other trademarks are trademarks of their respective owners.

DOLBY ATMOS®

Manufactured under license from Dolby Laboratories. Dolby, Dolby Atmos, and the double-D symbol are Trademarks of dolby Laboratories.

dtsX®

For DTS patents, see http://patents.dts.com. Manufactured under license from DTS Licensing Limited. DTS, the Symbol, & DTS and the Symbol together, DTS:X, and the DTS:X logo are registered trademarks or trademarks of DTS, Inc. in the United States and/or other countries. © DTS, Inc. All Rights Reserved.

Bluetooth®

The **Bluetooth®** word mark and logos are registered trademarks owned by the **Bluetooth** SIG, Inc. and any use of such marks by LG Electronics is under license.
Other trademarks and trade names are those of their respective owners.

HDMI™
HIGH-DEFINITION MULTIMEDIA INTERFACE

The terms HDMI, HDMI High-Definition Multimedia Interface, and the HDMI Logo are trademarks or registered trademarks of HDMI Licensing Administrator, Inc.

Specifications

General	
Power consumption	Refer to the main label on the unit.
	Networked standby : 5.0 W (If all network ports are activated.)
AC adapter	Model: DA-50F25 Manufacturer : Asian Power Devices Inc. Input: 100 - 240 V ~ 50 - 60 Hz Output: 25 V ⎓ 2 A
Dimensions (W x H x D)	Approx. 1060.0 mm x 57.0 mm x 119.0 mm (with foot)
Operating temperature	5 °C to 35 °C
Operating humidity	5 % to 90 %
Bus Power Supply (USB)	5 V ⎓ 500 mA
Available Digital Input Audio Sampling Frequency	32 kHz, 44.1 kHz, 48 kHz, 88.2 kHz, 96 kHz, 192 kHz
Available Digital Input Audio format	Dolby Atmos, Dolby Audio, DTS:X, DTS-HD, PCM

Input/Output	
OPTICAL IN	3 V (p-p), Optical jack x 1
HDMI IN	19 Pin (Type A, HDMI™ connector) x 1
HDMI OUT	19 Pin (Type A, HDMI™ connector) x 1 4K Sources dependent on HDCP 2.3 are supported at 4K resolutions.

Amplifier (RMS Output)	
Total	440 W RMS
Front	40 W RMS x 2 (4 Ω at 1 kHz, THD 10 %)
Center	40 W RMS (4 Ω at 1 kHz, THD 10 %)
Top	50 W RMS x 2 (4 Ω at 1 kHz, THD 10 %)
Subwoofer	220 W RMS (3 Ω at 80 Hz, THD 10 %)

Wireless subwoofer	
Power requirements	Refer to the main label on the subwoofer.
Power consumption	Refer to the main label on the subwoofer.
Type	1 Way 1 Speaker
Impedance	3 Ω
Rated Input Power	220 W RMS
Max. Input Power	440 W RMS
Dimensions (W x H x D)	Approx. 221.0 mm x 390.0 mm x 312.8 mm

System	
Wireless LAN (Internal antenna)	802.11a/b/g/n Wi-Fi networks

SPK8-S (SPK8-S, S78S1-S), Sold Separately

Wireless receiver	
Power requirements	Refer to the main label on the wireless receiver.
Power consumption	Refer to the main label on the wireless receiver.
Rear	70 W RMS x 2 (3 Ω at 1 kHz, THD 10 %)
Dimensions (W x H x D)	Approx. 60.0 mm x 220.0 mm x 175.0 mm

Rear speakers (Each)	
Type	1 Way 1 Speaker
Impedance	3 Ω
Rated Input Power	70 W RMS
Max. Input Power	140 W RMS
Dimensions (W x H x D)	Approx. 100.0 mm x 140.0 mm x 100.0 mm

- Designs and specifications are subject to change without prior notice.

Handling the Unit

When shipping the Unit

Please save the original shipping carton and packing materials. If you need to ship the unit, for maximum protection, re-pack the unit as it was originally packed at the factory.

Keeping the exterior surfaces clean

- Do not use volatile liquids such as insecticide spray near the unit.
- Wiping with strong pressure may damage the surface.
- Do not leave rubber or plastic products in contact with the unit for a long period of time.

Cleaning the unit

To clean the unit, use a soft, dry cloth. If the surfaces are extremely dirty, use a soft cloth lightly moistened with a mild detergent solution. Do not use strong solvents such as alcohol, benzine, or thinner, as these might damage the surface of the unit.

Important Information Relating to Network Services

All information, data, documents, communications, downloads, files, text, images, photographs, graphics, videos, webcasts, publications, tools, resources, software, code, programs, applets, widgets, applications, products and other content ("Content") and all services and offerings ("Services") provided or made available by or through any third party (each a "Service Provider") is the sole responsibility of the Service Provider from whom it originated.

The availability of and access to Content and Services furnished by the Service Provider through the LGE Device are subject to change at any time, without prior notice, including, but not limited to the suspension, removal or cessation of all or any part of the Content or Services.

Should you have any inquiry or problem related to the Content or Services, you may refer to the Service Provider's website for the most up-to-date information. LGE is neither responsible nor liable for customer service related to the Content and Services. Any question or request for service relating to the Content or Services should be made directly to the respective Content and Service Providers.

Please note that LGE is not responsible for any Content or Services provided by the Service Provider or any changes to, removal of, or cessation of such Content or Services and does not warrant or guaranty the availability of or access to such Content or Services.

OPEN SOURCE SOFTWARE NOTICE INFORMATION

To obtain the source code under GPL, LGPL, MPL, and other open source licenses, that is contained in this product, please visit http://opensource.lge.com.

In addition to the source code, all referred license terms, warranty disclaimers and copyright notices are available for download.

LG Electronics will also provide open source code to you on CD-ROM for a charge covering the cost of performing such distribution (such as the cost of media, shipping, and handling) upon email request to opensource@lge.com.

This offer is valid for a period of three years after our last shipment of this product. This offer is valid to anyone in receipt of this information.

For more information about Google's open source, visit device settings of Google Home app.

Disclaimers

Google, Google Home, Google Play, Chromecast built-in and other related marks and logos are trademarks of Google LLC.

The Google Assistant requires an internet/data connection. Data rates may apply.

The Google Assistant is not available in certain languages and countries.

Subscriptions may be required, and additional terms, conditions and/or charges may apply.

Controlling certain devices and features in your home requires a compatible smart device.

LG

Life's Good