OWNER'S MANUAL

LG Digital Signage

(MONITOR SIGNAGE)

Please read the user manual before using this product to ensure safe and convenient use.

49XS4P-B

55XS4P-B

www.lg.com

Copyright © 2024 LG Electronics Inc. All Rights Reserved.

TABLE OF CONTENTS

BASIC 3

- Checking the Accessories 3
- Learning the Buttons 4

CHECKING BEFORE INSTALLATION 5

- Installation Orientation 5
- Installation Location 6
- Wall Mount Holder 7
- Safety and Precaution Guide for Installation 8

PRECAUTIONS FOR USE 9

- Dust 9
- Afterimage 9

PRODUCT SPECIFICATIONS ..11

LICENCE 15

WARNING - This product is not intended for household use.

BASIC

NOTE

- The accessories provided with your product may vary depending on the model or region.
- Product specifications or contents in this manual may be changed without prior notice due to upgrade of product functions.
- SuperSign Software & Manual
  - Visit *https://partner.lge.com* to download the latest SuperSign software and manual.

Checking the Accessories

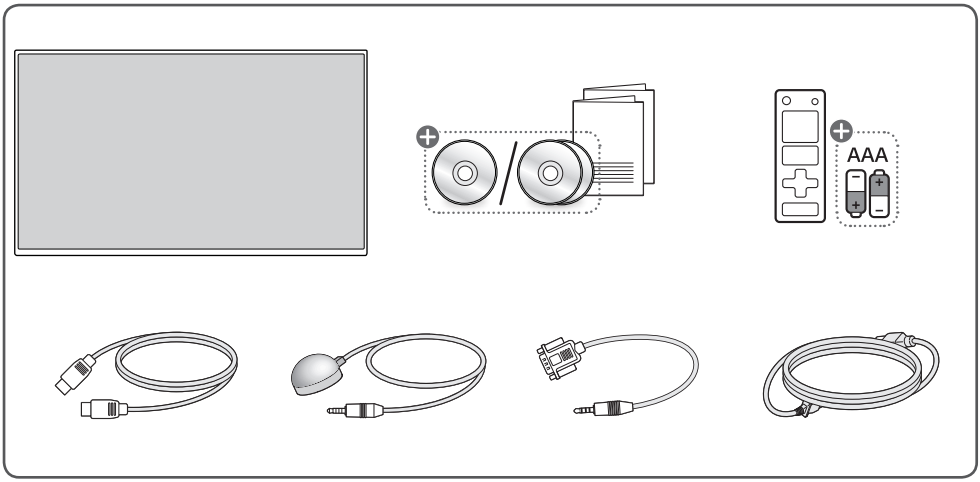

⊕ Depending on country

Learning the Buttons

The image may be different according to the model.

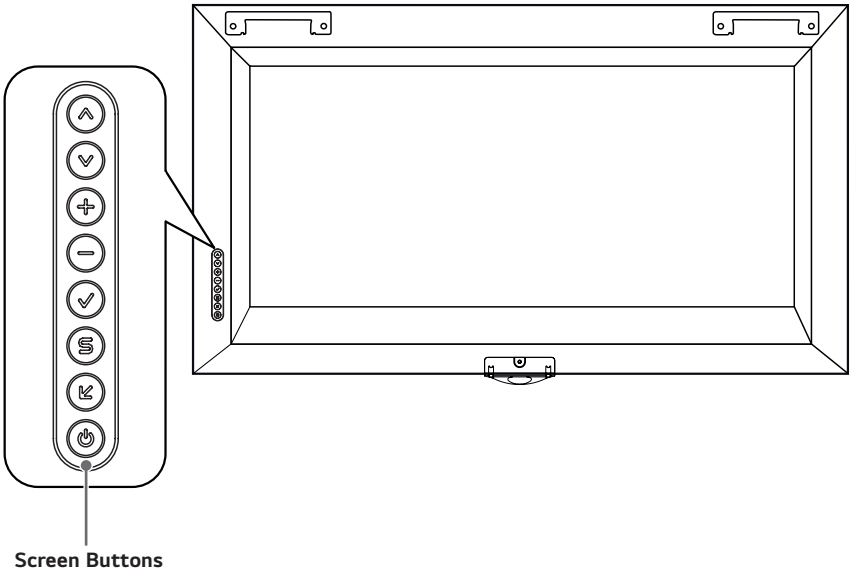

Adjusts up and down.

Moves left and right.

Displays the current signal and mode.

Accesses the main menus, or saves your input and exits the menus.

Change the input signal.

Turns the power on or off.

NOTE

- You can adjust the volume by using the remote control.

CHECKING BEFORE INSTALLATION

We are not responsible for product damage caused by failure to follow the guide.

Installation Orientation

Using Vertically

When installing vertically, rotate the monitor clockwise 90 degrees while facing the front of the screen.

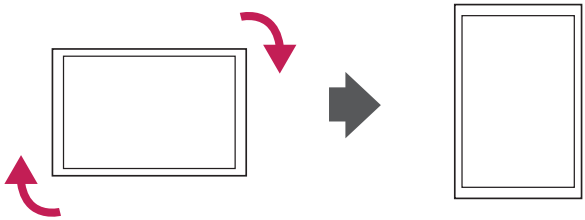

Ceiling, Floor Orientation

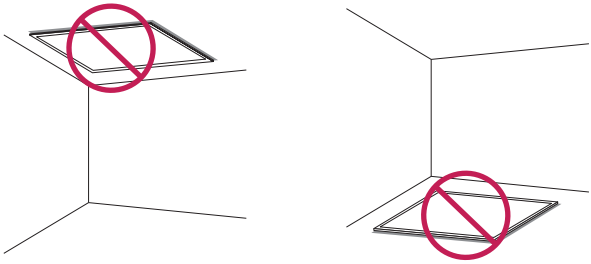

Installation Location

We are not responsible for product damage caused by failure to follow the guide.

Indoor

Installing on a Wall

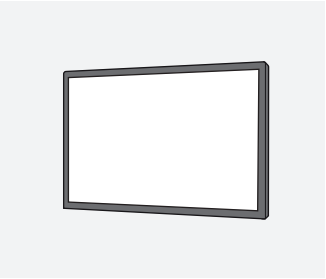



A : 100 mm or more

- The product warranty will be void if it is used with the front panel exposed to direct sunlight.

Installing on a Recessed Wall

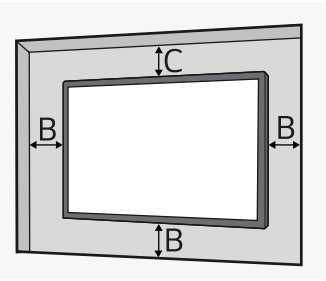

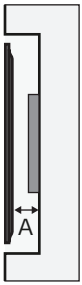

A : 100 mm or more
B : 100 mm or more
C : 100 mm or more

- The product warranty will be void if it is used with the front panel exposed to direct sunlight.

Outdoor

Outdoor Enclosed



Wall Mount Holder

To install the monitor on a wall, attach a wall mount holder (optional) to the back of the monitor.

Take caution, and ensure that the wall mount holder (optional) is securely fixed to the monitor and to the wall.

The VESA dimensions of the wall mount by model are as follows.

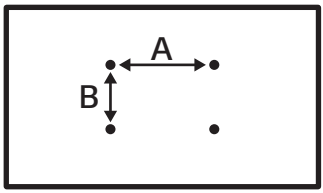

Model	VESA Dimensions (A x B) (mm)	Standard Dimensions	Length (Maximum) (mm)	Quantity
49XS4P-B	600 x 400	M6	15	4
55XS4P-B	600 x 400	M6	15	4

⚠ CAUTION

- Disconnect the power cord first, and then move or install the monitor. Otherwise, it may result in electric shock.
- If the monitor is installed on a ceiling or inclined wall, it may fall and result in injury.
- Damage to the monitor by tightening the screws too tightly may void your warranty.
- Use screws and wall mount plates conforming to VESA standards. Breakage or personal injury due to use or misuse of inappropriate components is not covered by the warranty of this product.

NOTE

- Using screws longer than the indicated depth may damage the inside of the product. Be sure to use the proper length.
- For more information on installation, please refer to the user manual for the wall mount.

Safety and Precaution Guide for Installation

Direct Sunlight

- Make sure to keep sufficient space between the product and the window glass. (100 mm or more)
- Proper ventilation is recommended.
- Attach a film with UV-blocking properties to the window glass.
  - Protect the display with cloth or a box when storing the device after it has been powered off.
  - This can prevent faults such as black spots, creases, and yellowing.
- Depending on the environment, tempered glass is highly recommended. Avoid mounting any devices directly onto the window glass surface or the window frame.
- To prevent overheating of the window glass and the product, please maintain sufficient distance between them.

Temperature

- Make a cooling system for the enclosure so that the operating temperature of the product can be maintained.
  - 0 °C ~ 40 °C (without Direct Sunlight)
  - 0 °C ~ 30 °C (Direct Sunlight)

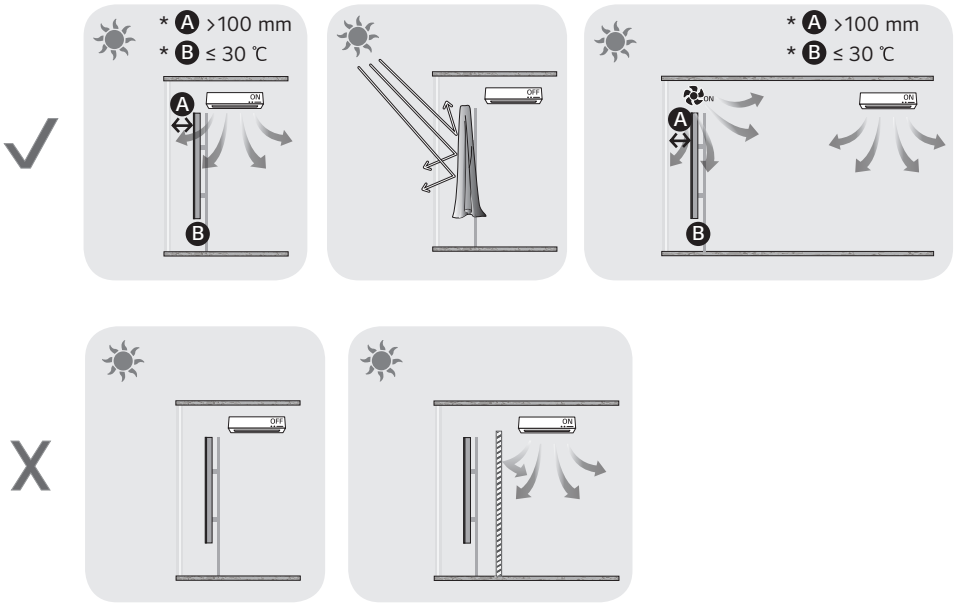

PRECAUTIONS FOR USE

Dust

The warranty will not cover any damage caused by using the product in an excessively dusty environment.

Afterimage

- After-image appears when the product is turned off.
  - Pixels may be damaged rapidly if a still image is displayed on the screen for a long period of time. Use the screen-saver function.
  - Switching from a screen with high differences in luminance (black and white or grey) to a darker screen may cause an afterimage. This is normal due to the display characteristics of this product.
- When the LCD screen is in a still pattern for extended periods of use, a slight voltage difference may occur between the electrodes that operate the liquid crystal (LC). The voltage difference between the electrodes increases over time and tends to keep the liquid crystal aligned in one direction. At this time, the previous image remains, which is called an afterimage.
- Afterimages do not occur when continuously changing images are used but take place when a certain screen is fixed for a long time. The following are operational recommendations for reducing the occurrence of afterimages when using a fixed screen. The maximum recommended time for switching the screen is 12 hours. Shorter cycles are better for preventing afterimages.

• Recommended Usage Condition

1 Change the background colour and text colour at equal intervals.

- Afterimages occur less when the colours to be changed are complementary to one another.



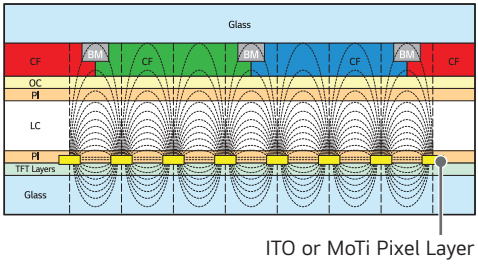

2 Switch the screen at equal time intervals.

- Take caution, and ensure that text or images from before the screen change are not left in the same location after the screen change.



PRODUCT SPECIFICATIONS

Without prior notice, all product information and specifications contained in this manual are subject to change to improve the performance of the product.

Input/Output Ports	SPEAKER OUT, LAN, USB 2.0 IN, HDMI™ IN 1, HDMI™ IN 2, DP IN, DP OUT, RS-232C IN, RS-232C OUT, IR&LIGHT SENSOR, AC	
Resolution	Recommended Resolution	1920 x 1080 @ 60 Hz
	Maximum Resolution	- This may not be supported on some OS or graphics card types.
Environmental Conditions	Operating Temperature	0 °C to 30 °C (Direct Sunlight) 0 °C to 40 °C (Without Direct Sunlight)
	Operating Humidity	10 % to 80 % (Condition for preventing condensation)
	Storage Temperature	-20 °C to 60°C
	Storage Humidity	5 % to 85 % (Condition for preventing condensation)
		* Product box packaging storage conditions
	Installation site	Indoor

49XS4P-B	
Power Voltage	100-240 V~ 50/60 Hz 3.9 A
Size (Width x Height x Depth) / Weight	1092.8 mm x 626.4 mm x 83.5 mm / 20.5 kg

55XS4P-B	
Power Voltage	100-240 V~ 50/60 Hz 4.2 A
Size (Width x Height x Depth) / Weight	1235.4 mm x 709.4 mm x 98.1 mm / 25.0 kg

Wireless module (LGSBWAC92) Specifications	
Wireless LAN (IEEE 802.11a/b/g/n/ac)	
Frequency range (MHz)	**Output power (Max.) (dBm)**
2400 to 2483.5	18
5150 to 5725	18
5725 to 5850	12
Bluetooth	
Frequency range (MHz)	**Output power (Max.) (dBm)**
2400 to 2483.5	8

- As band channels can vary per country, the user cannot change or adjust the operating frequency. This product is configured for the regional frequency table.
- For consideration of the user, this device should be installed and operated with a minimum distance of 20 cm between the device and the body.

(Only Nigeria)

Connection and use of this communication equipment is permitted by the Nigerian Communications Commission.

(Only Hong Kong)

Wireless module (LGSBWAC92) Specifications	
Wireless LAN (IEEE 802.11a/b/g/n/ac)	
Frequency range (MHz)	**Output power (Max.) (dBm)**
2400 to 2483.5	18
5150 to 5350	18
5725 to 5850	12
Bluetooth	
Frequency range (MHz)	**Output power (Max.) (dBm)**
2400 to 2483.5	8

- As band channels can vary per country, the user cannot change or adjust the operating frequency. This product is configured for the regional frequency table.
- For consideration of the user, this device should be installed and operated with a minimum distance of 20 cm between the device and the body.

(Only Vietnam)

Wireless module (LGSBWAC92) Specifications	
Wireless LAN (IEEE 802.11a/b/g/n/ac)	
Frequency range (MHz)	**Output power (Max.) (dBm)**
2400 to 2483.5 5150 to 5350 5725 to 5850	17.5 17.5 12
Bluetooth	
Frequency range (MHz)	**Output power (Max.) (dBm)**
2400 to 2483.5	8

- As band channels can vary per country, the user cannot change or adjust the operating frequency. This product is configured for the regional frequency table.
- For consideration of the user, this device should be installed and operated with a minimum distance of 20 cm between the device and the body.

(Only Philippines)

Wireless module (LGSBWAC92) Specifications	
Wireless LAN (IEEE 802.11a/b/g/n/ac)	
Frequency range (MHz)	**Output power (Max.) (dBm)**
2400 to 2483.5 5150 to 5725 5725 to 5850	18 18 18
Bluetooth	
Frequency range (MHz)	**Output power (Max.) (dBm)**
2400 to 2483.5	8

- As band channels can vary per country, the user cannot change or adjust the operating frequency. This product is configured for the regional frequency table.
- For consideration of the user, this device should be installed and operated with a minimum distance of 20 cm between the device and the body.
- FCC ID: BEJLGSBWAC92 / IC: 2703H-LGSBWAC92

HDMI 1 / HDMI 2 / DisplayPort (PC) Support mode

Resolution	Horizontal frequency (kHz)	Vertical frequency (Hz)
640 x 480	31.469	59.94
800 x 600	37.879	60.317
1024 x 768	48.363	60
1280 x 720	44.772	59.855
1366 x 768	47.712	60
1280 x 1024	63.981	60.02
1680 x 1050	65.29	59.954
1920 x 1080	67.5	60

HDMI 1 / HDMI 2 / DisplayPort (DTV) Support mode

Resolution	Horizontal frequency (kHz)	Vertical frequency (Hz)
480/60p	31.5	60
576/50p	31.25	50
720/50p	37.5	50
720/60p	45	60
1080/50i	28.1	50
1080/60i	33.75	60
1080/50p	56.25	50
1080/60p	67.5	60

NOTE

- Horizontal frequency: The horizontal interval is the time taken to display one horizontal line. When 1 is divided by the horizontal interval, the number of horizontal lines displayed every second can be tabulated as the horizontal frequency. The unit is kHz.
- Vertical frequency: The product display functions by the screen image changing dozens of times every second like a fluorescent lamp. The vertical frequency or refresh rate is the number of image displays per second. The unit is Hz.

LICENCE

Supported licenses may differ by model. For more information of the licenses, visit *www.lg.com*.



The terms HDMI, HDMI High-Definition Multimedia Interface, HDMI trade dress and the HDMI Logos are trademarks or registered trademarks of HDMI Licensing Administrator, Inc.

Manufactured under license from Dolby Laboratories. Dolby, Dolby Vision, Dolby Vision IQ, Dolby Audio, Dolby Atmos, and the double-D symbol are trademarks of Dolby Laboratories Licensing Corporation.



The Bluetooth® word mark and logos are registered trademarks owned by Bluetooth SIG, Inc. and any use of such marks by LG Electronics Inc. is under license. Other trademarks and trade names are those of their respective owners.



The model and serial number of the product are located on the back and on one side of the product. Record them below in case you ever need service.

MODEL

SERIAL NO.

Temporary noise is normal when powering ON or OFF this device.