Scan the QR code to see the manual.

OWNER'S MANUAL

DRYER

Before beginning installation, read these instructions carefully. This will simplify installation and ensure that the product is installed correctly and safely. Leave these instructions near the product after installation for future reference.

ENGLISH

RHX1008N**

MFL72047836
Rev.01_010926

www.lg.com

Copyright © 2025-2026 LG Electronics. All Rights Reserved

TABLE OF CONTENTS

This manual may contain images or content that may be different from the model you purchased.

This manual is subject to revision by the manufacturer.

SAFETY INSTRUCTIONS

READ ALL INSTRUCTIONS BEFORE USE 5

Safety Messages 5

WARNING 6

Technical Safety 6

Maximum Capacity 7

Installation 8

Operation 9

Maintenance 10

Disposal 10

CARING FOR THE ENVIRONMENT

Environmental and Economical Tips 11

Energy consumption 11

Disposal of Your Old Appliance 12

Disposal of the Packaging Material 12

This dryer contains refrigerant gases 12

OPERATION

Control Panel 13

Control Panel Features 13

Basic Operation 16

Using the Appliance 16

Preparing the Clothes 19

Checking the Clothes before Loading 19

Sorting the Clothes 19

Checking the Fabric Care Label 20

Programme Table 21

Default Drying Programme 21

Selectable Drying Options 23

Extra Options and Functions 25

Customizing a Drying Programme 25

Using Extra Options 25

Using Various Settings....26
Using Dryer Rack....27
Auto Condenser Cleaning....28

SMART FUNCTIONS

LG ThinQ Application....29
LG ThinQ Application Features....29
Installing LG ThinQ App and Connecting an LG Appliance....30
Activating Network Connection....31
Using the Appliance Remotely....32
Deactivating Network Connection....32
Radio Equipment Specifications....32
Effect of Network Activation on Power Consumption....33
Declaration of Conformity....33
Declaration of Conformity for UK....33

Smart Diagnosis....34
Using LG ThinQ to Diagnose Issues....34
Using Audible Diagnosis to Diagnose Issues....34

MAINTENANCE

Cleaning after Every Dry....35
Cleaning the Lint Filters....35
Emptying the Water Container....37
Ventilating inside the drum....38

Cleaning the Appliance Periodically....39
Wiping the Moisture Sensor....39
Using Drum Clean Feature....39
Using Condenser Clean Feature....40
Cleaning the Condenser....41

TROUBLESHOOTING

Before Calling for Service....43
Error Messages....43
Operation....45
Performance....46
Odours....49
Stains....50
Wi-Fi....51
Customer Care and Service....51

INSTALLATION

Installation Location Requirements **52**
Installation Location 52
Ventilation 52
Ambient Temperature 53
Electrical Connection 53
Leveling the Appliance **54**
Checking Leveling 54
Adjusting and Leveling the Appliance 54
Stacking Instructions **55**
Stacking Kit 55
Installation Procedure 55
Installing the Optional Drain Hose 55

APPENDIX

Names of Parts and Accessories **57**
Front View 57
Available Accessories 58
Technical Data **59**
Consumption Data 59
Note for Test Institutes 60
Specifications 60
Additional Information **62**
Open Source Software Notice Information 62

The following safety guidelines are intended to prevent unforeseen risks or damage from unsafe or incorrect operation of the appliance. The guidelines are separated into ‘WARNING’ and ‘CAUTION’ as described below.

Safety Messages

⚠ This symbol is displayed to indicate matters and operations that can cause risks. Read the part with this symbol carefully and follow the instructions in order to avoid risks.

⚠ **WARNING**
This indicates that the failure to follow the instructions can cause serious injury or death.

⚠ **CAUTION**
This indicates that the failure to follow the instructions can cause the minor injury or damage to the appliance.

⚠ WARNING

To reduce the risk of explosion, fire, death, electric shock, injury or scalding to persons when using this product, follow basic precautions, including the following.

Technical Safety

WARNING - To avoid a fire
Risk of Fire and Flammable Materials

- In the appliance enclosure or in the built-in structure, keep ventilation openings clear of obstruction. If not, it can result in a fire.
- This appliance contains R290, a refrigerant that is environmentally friendly but flammable. Do not damage the refrigerant circuit, keep an open frame and ignition sources away from the appliance.
- This appliance can be used by children aged from 8 years and above and persons with reduced physical, sensory or mental capabilities or lack of experience and knowledge if they have been given supervision or instruction concerning use of the appliance in a safe way and understand the hazards involved. Children shall not play with the appliance. Cleaning and user maintenance shall not be made by children without supervision.
- Children of less than 3 years should be kept away unless continuously supervised.
- Do not dry unwashed items in the appliance.
- Fabric softeners, or similar products, should be used as specified by the fabric softener instructions.
- Remove all objects from pockets such as lighters and matches.
- Never stop the appliance before the end of the drying cycle unless all items are quickly removed and spread out so that the heat is dissipated.

- The appliance is not to be used if industrial chemicals have been used for cleaning.
- Items that have been soiled with substances such as cooking oil, vegetable oil, acetone, alcohol, petroleum, kerosene, spot removers, turpentine, waxes and wax removers should be washed in hot water with an extra amount of detergent before being dried in the appliance.
- Do not drink the condensed water. Failure to do so may result in food-borne illnesses.
- If the supply cord is damaged, it must be replaced by the manufacturer or its service agents or similarly qualified person in order to avoid a hazard.
- The lint filters must be cleaned frequently.
- Lint must not to be allowed to accumulate around the appliance.
- Do not spray dry cleaning detergent directly onto the appliance or use the appliance to dry clothes left with dry cleaning detergent.
- Do not dry clothes stained with oil substances. Oil substances (including edible oils) stained on clothes cannot be completely removed even after washing with water.
- The appliance must not be supplied through an external switching device, such as a timer, or connected to a circuit that is regularly switched on and off by a utility.
- Remove clothes from the appliance immediately when drying is complete or the power is turned off during the drying process. Leaving clothes that have been dried in the appliance unattended could result in fire. Remove clothes immediately after drying, and then hang or lay the clothes flat to cool.
- This appliance is intended to be used in household only.

Maximum Capacity

- The maximum capacity in some cycles for clothes to be dried is **8 kg (Dry)**.

- The recommended maximum capacity for each drying programme may differ. To get good dry results, please refer to **Programme Table** in **OPERATION** chapter for further details.

Installation

- Make sure the appliance is properly installed, grounded, and adjusted by qualified service personnel according to the installation instructions.
- Never attempt to operate the appliance if it is damaged, malfunctioning, partially disassembled, or has missing or broken parts, including a damaged cord or plug.
- This appliance should only be transported by two or more people holding the appliance securely.
- Do not install the appliance in a damp and dusty place. Do not install or store the appliance in any outdoor area, or any area that is subject to weathering conditions such as direct sunlight, wind, rain, or temperatures below freezing.
- Tighten the drain hose to avoid separation.
- If the power cord is damaged or the hole of the socket outlet is loose, do not use the power cord and contact an authorized service centre.
- Do not plug multiple socket outlets, an extension power cable or adapter with this appliance.
- Items such as foam rubber (latex foam), shower caps, waterproof textiles, rubber backed articles and clothes or pillows fitted with foam rubber pads should not be dried in the appliance.
- This appliance must not be installed behind a lockable door, a sliding door or a door with a hinge on the opposite side to that of the appliance, in such a way that a full opening of the appliance door is restricted.
- This appliance must be grounded. In the event of malfunction or breakdown, grounding will reduce the risk of electric shock by providing a path of least resistance for electric current.

- This appliance is equipped with a power cord having an equipment-grounding conductor and a grounding power plug. The power plug must be plugged into an appropriate socket outlet that is installed and grounded in accordance with all local codes and ordinances.
- Improper connection of the equipment-grounding conductor can result in risk of electric shock. Check with a qualified electrician or service personnel if you are in doubt as to whether the appliance is properly grounded.
- Do not modify the power plug provided with the appliance. If it does not fit the outlet, have a proper outlet installed by a qualified electrician.

Operation

- Do not attempt to separate any panels or disassemble the appliance. Do not apply any sharp objects to the control panel in order to operate the appliance.
- Do not repair or replace any part of the appliance yourself. All repairs and servicing must be performed by qualified service personnel unless specifically recommended in this Owner's Manual. Use only authorized factory parts.
- Keep the area underneath and around the appliance free from combustible materials such as lint, paper, rags, chemicals, etc.
- Do not put pets or other animals into the appliance.
- Do not leave the appliance door open. Children may hang on the door or crawl inside the appliance, causing damage or injury.
- Never reach into the appliance while it is operating. Wait until the drum has completely stopped.
- Do not put in, wash or dry articles that have been cleaned in, washed in, soaked in, or spotted with combustible or explosive substances (such as wax, oil, paint, gasoline, degreasers, drycleaning solvents, kerosene, vegetable oil, cooking oil, etc.). Improper use can cause fire or explosion.

- In case of flood, disconnect the power plug and contact the LG Electronics customer information centre.
- Do not push down on the appliance door when it is open.
- Do not use flammable gas and combustible substances (benzene, gasoline, thinner, petroleum, alcohol, etc.) near the appliance.
- If the drain hose or inlet hose is frozen during winter, thaw it out before using the appliance.
- Keep all washing detergents, softener and bleach away from children.
- Do not touch the power plug or the appliance controls with wet hands.
- Do not bend the power cable excessively or place a heavy object on it.

Maintenance

- Remove any moisture or dust from the power plug before securely plugging it into an outlet.
- Disconnect the appliance from the power supply before cleaning the appliance. Setting the controls to the OFF or stand by position does not disconnect this appliance from the power supply.
- Never unplug the appliance by pulling on the power cable. Always grip the power plug firmly and pull straight out from the outlet.
- Do not spray water inside or outside the appliance to clean it.

Disposal

- Before discarding an old appliance, unplug it and cut off the power cable directly behind the appliance to prevent misuse.
- Dispose of all packaging materials (such as plastic bags and styrofoam) away from children. The packaging materials can cause suffocation.
- Remove the door before disposing of or discarding this appliance to avoid the danger of children or small animals getting trapped inside.

Energy consumption

- The appliance performs best at a room temperature of 23 °C.
- A high atmospheric temperature and a small room may both increase drying time as well as energy consumption.
- Evenly loading laundry up to the capacity indicated by the manufacturer for the respective programmes will contribute to energy savings.
- Do not load soaking wet clothes into the appliance. It will cause an increasing of drying time and energy consumption. Make sure that the clothes are spun thoroughly before loading.
- If the clothes are not spun at a high speed during washing, energy consumption and drying times will increase. Large bed sheets or quilt covers may not dry evenly due to uneven airflow should they become rolled up. They may require removal and reloading mid cycle to ensure proper drying.
- Open the door and ensure the lint filter is clean. When the filter is full with lint, drying times will be longer than usual.

Environmental and Economical Tips

Disposal of Your Old Appliance

- This crossed-out wheeled bin symbol indicates that waste electrical and electronic products (WEEE) should be disposed of separately from the municipal waste stream.
- Old electrical products can contain hazardous substances so correct disposal of your old appliance will help prevent potential negative consequences for the environment and human health. Your old appliance may contain reusable parts that could be used to repair other products, and other valuable materials that can be recycled to conserve limited resources.
- You can take your appliance either to the shop where you purchased the product, or contact your local government waste office for details of your nearest authorised WEEE collection point. For the most up to date information for your country please see www.lg.com/global/recycling.

Disposal of the Packaging Material

- Dispose of the packaging waste according to recycling symbols of material types. Put the packaging waste in relevant containers to recycle it.

This dryer contains refrigerant gases

R290 (GWP: 3): 0.145 kg Hermetically sealed.

Control Panel Features

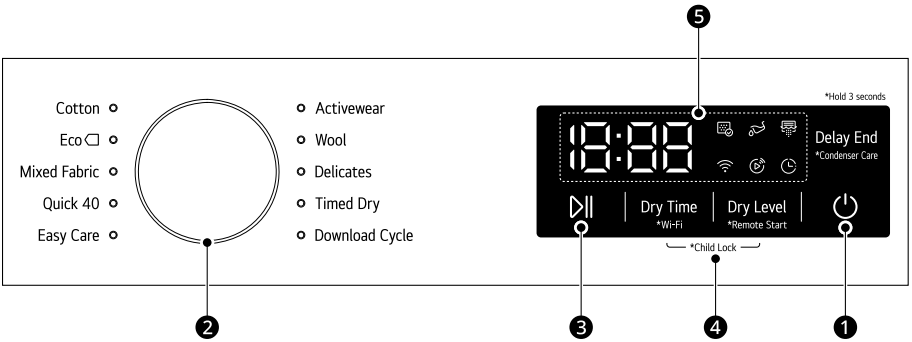

	Description
❶	**Power On/Off Button** • Press the **Power** button to turn power on and off.
❷	**Programme Selector** • Programmes are available according to the clothing type. • The lamp will light up to indicate the selected programme.
❸	**Start/Pause Button** • Press and hold the **Start/Pause** button for 1 second to start or pause a dry cycle. • When in pause, the power is turned off automatically after a certain time for safety reasons.

Control Panel

	Description
❹	**Extra Options and Functions / Additional Programme Buttons** • Use these buttons to select the desired options for the selected programme. Not all options are available in each programme. • To use the extra functions, press and hold the corresponding button for 3 seconds. The corresponding symbol lights up in the display. **Remote Start** • With the **LG ThinQ** app, you can use a smartphone to control your appliance remotely. • In order to use the Remote Start function, refer to **SMART FUNCTIONS**. **Wi-Fi** • Press and hold **Dry Time** button for 3 seconds to initiate the connection of the appliance to the **LG ThinQ** application.
❺	**Time and Status Display** • The display shows the settings, estimated remaining time, options, and status messages. When the appliance is turned on, the default settings in the display will illuminate.

Time and Status Display

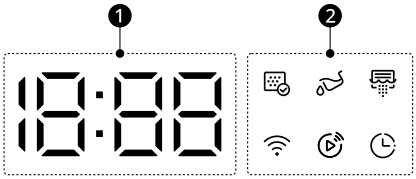

	Description
❶	**Time Remaining Display** • When a drying programme is selected, drying time for the selected programme is displayed. This time will change when you set the extra options for the programme. • Error messages will appear when the appliance diagnose problems.

	Description
❷	**Extra Option and Function Indicator** • lights up when the lint filter should be cleaned. - Cleaning notice: When you press the **Power** button, the icon will become displayed. • lights up when the water collection tank needs to be emptied or is full. - Emptying notice: When you press the **Power** button, this icon will become displayed. - Full water notice: The icon will become displayed and a chime will sound while the appliance is in operation. • lights up when the appliance is automatically cleaning the condenser. • lights up when the appliance is connected to Wi-Fi network at home. • lights up when the **Remote Start** feature is activated. - **Remote Start**: Displayed when the remote control function is turned on. Please refer to the ThinQ section. • lights up when the **Delay End** feature is activated. - **Delay End**: Can set the delay end from 3 to 19 hours.

Using the Appliance

Open the door between loads the first few times you use the appliance to allow any odours from the interior of the appliance to disperse.

Children must be supervised so that they do not climb inside the drum.

1 Ensure the lint filter and water container are clean.

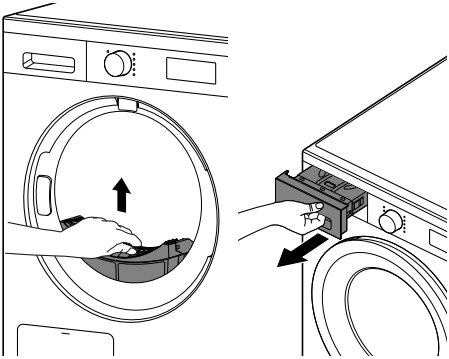

- Open the door and ensure the lint filter is clean. When the filter is full with lint, drying times will be longer than usual.
- Pull out the water container and empty the condensed water. When the water container is full, the appliance may stop during the cycle.

NOTE

- In some instance, LED window may display to inform you that the water container is full. If this occurs, empty the water container.

2 Place the clothes into the drum after sorting and close the door.

- Push the clothes deep into the drum so that the clothes keeps away from the door seal. When the clothes get stuck between the door and seal, they may get damaged while drying.
- The clothes should be sorted by fabric types and dryness level.
- All strings and attached belts of clothes should be well tied and fixed before being put into the drum.

3 Press and hold the **Power** button for 1 second to turn the appliance on.

- Depending on the models, the **Power** button may light up to indicate that the appliance is ready for dry.

4 Choose a drying programme by turning the programme selector knob.

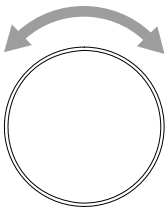

5 Press and hold the **Start/Pause** button for 1 second to start the drying programme.

- When you press the button, the appliance ventilates the inside of the drum for 10 seconds in order to get the appliance ready for drying operation.

NOTE

- The appliance washes lint, which builds up onto the surface of the condenser, automatically using water that is condensed from the clothes during operation.
- The frequency of cleaning condenser may vary depending on the size and the initial moisture amount of the clothes.

6 After the drying programme has finished, open the door and unload the clothes.

⚠ CAUTION

- Be carefull! The drum inside may still be hot.

7 Press and hold the **Power** button for 1 second to turn the appliance off.

8 Clean the lint around the door glass, rubber packing, and filter.

- Wipe clean with a damp cloth or wet tissue.

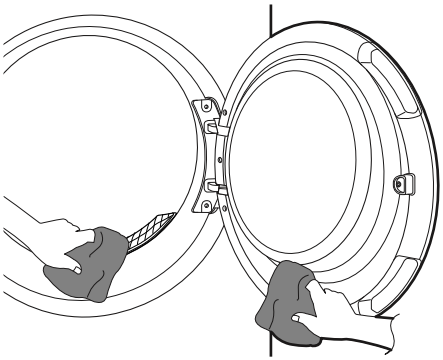

9 Clean the lint filter and empty the water container.

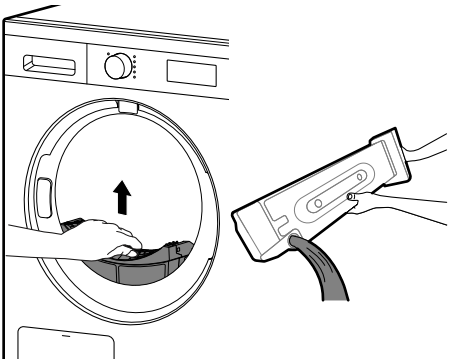

10 To help reduce odours from forming, the dryer's door can be left open or slightly ajar for a short period of time if possible to help ventilate the drum after use.

⚠ WARNING

- For safety reasons, do not allow children or animals to enter the appliance. It may cause damage or injury.

NOTE

- The final part of a tumble dry cycle occurs without heat (cool down cycle) to ensure that the clothes are left at a temperature that ensures the clothes will not be damaged.
- A high atmospheric temperature and a small room may both increase drying time as well as energy consumption.

NOTE

- For the best drying performance and most efficient energy usage, do not overload the appliance.

Checking the Clothes before Loading

⚠ CAUTION

- Check that the clothes are not stuck between appliance and door, otherwise the clothes may get damaged while drying.

- Observe the maximum load capacity on the programme table for the relevant drying programme to get optimum drying results. Overloading gives a poor drying result and causes unnecessary creasing.
- Do not load soaking wet clothes into the appliance. Doing so will increase the drying time and energy consumption. Make sure that the clothes are spun thoroughly in the washer before loading them in the dryer.
- A mixed fabric load can cause the drying time to be extended and the time remaining in the display to pause during active drying until the actual time remaining matches the time displayed.
- Make sure to empty all pockets. Items such as nails, hair clips, matches, pens, coins and keys can damage both your appliance and clothes.
- Remove loose belts and close zippers, hooks and strings to make sure that these items do not snag other clothes.

Sorting the Clothes

Clothes have their own fabric care labels, so drying according to the fabric care label is recommended.

Sort the clothes into size and type of fabric and then prepare the clothes according to the symbols on the fabric care labels.

Woollens

- Dry woollens on the **Wool** programme. Be sure to follow fabric care label symbols first. Wool may not be completely dried from the cycle, so do not repeat drying. Pull woollens to their original shape and dry them flat.

Woven and Loopknit Materials

- Some woven and loopknit materials may shrink, depending on quality.

No-Iron and Synthetics

- Do not overload the appliance. Take out no-iron items as soon as the appliance stops to reduce creases.

Baby Clothes and Nightgowns

- Always check fabric care labels.

Rubber and Plastics

- Do not dry any items made from or containing rubber or plastics such as:
  - Aprons, Bibs and Chair Covers
  - Curtains and Tablecloths
  - Bath Mats

Fiberglass

- Do not dry fiberglass items in the appliance. Glass particles left in the appliance may be subsequently picked up by your clothes in later cycles.

Symbol	Description
	Low Heat
	No Heat / Air
	Line Dry / Hang to dry
	Drip Dry
	Dry Flat
	In the Shade

Checking the Fabric Care Label

The symbols on the fabric care label tell you about the fabric content of your clothes and how they should be dried.

Symbol	Description
	Dry
	Tumble Dry
	Permanent Press / Crease Resistant
	Gentle / Delicate
	Do not Tumble Dry
	Do not Dry
	High Heat
	Medium Heat

Default Drying Programme

These programmes are in the initial programme list.

Programme	Cotton	Max. Load Capacity	8 kg
Description	Use for drying all normal items such as cotton, linen, shirts, jeans or mixed loads, except delicate fabrics such as wool or silk.		
Dry Level	Default : 2 (**Cupboard**)	Available : **All**	

Programme	Eco	Max. Load Capacity	8 kg
Description	Use for drying with less energy consumption for all normal items such as cotton, linen, shirts, jeans or mixed loads, except delicate fabrics such as wool or silk.		
Dry Level	Default : 2 (**Cupboard**)	Available : **All**	

Programme	Mixed Fabric	Max. Load Capacity	4 kg
Description	Dries mixed fabrics simultaneously. • Use for various kind of fabrics except special garments (silk/ delicate, sports wear, dark clothes, wool, duvet/curtains).		
Dry Level	Default : 2 (**Cupboard**)	Available : **All**	

Programme	Quick 40	Max. Load Capacity	1 kg
Description	Use this programme for drying up to 3 pieces of polyamide, acrylic and polyester items.		
Dry Level	Not adjustable		

Programme Table

Programme	Easy Care	Max. Load Capacity	4 kg
Description	Dries clothes that do not need ironing after drying. • Use for polyamide, acrylic, polyester.		
Dry Level	Default : ⍈ (**Cupboard**)	Available : ⍈ (**Cupboard**), ⍇ (**Iron**)	

Programme	Activewear	Max. Load Capacity	2 kg
Description	Use this programme for drying special garments such as sports and outdoor wear.		
Dry Level	Not adjustable		

Programme	Wool	Max. Load Capacity	1 kg
Description	Use this programme for drying shrinkable woolen or hand-washable items requiring delicate care.		
Dry Level	Not adjustable		

Programme	Delicates	Max. Load Capacity	1.5 kg
Description	Use this programme for drying dress shirts, blouses, nylons, lingerie, or sheer and lacy clothes which can easily be damaged.		
Dry Level	Not adjustable		

Programme	Timed Dry	Max. Load Capacity	-
Description	Use this programme to manually select the drying time from 20 to 180 minutes.		
Dry Time	Default: 20 minutes	Available: 20-180 minutes	

Programme	Download Cycle	Max. Load Capacity	-
Description	This programme allows you to download a new and special drying programme to your appliance with a smartphone. The dafault programme is **Allergy Care**.		

⚠ CAUTION

- If the load is less than 1 kg, please use the **Timed Dry** programme. Wool items should be dried using the **Wool** programme and heat-sensitive fabrics including silk, underwear and lingerie should be dried using the **Delicates** programme. Please comply with the recommended clothing load when you select your desired programme. Otherwise, your clothes may be damaged.
- Drying time may vary depending on the installation environment and actual usage conditions. Drying time may be longer due to seasonal influences and when the ambient temperature drops below medium to low temperatures (approximately 18℃ to 20℃).

NOTE

- If the appliance is installed as built under, it may cause performance degradation.
- If the clothes are not spun at a high speed during washing, energy consumption and drying times will increase. Large bed sheets or quilt covers may not dry evenly due to uneven airflow should they become rolled up. They may require removal and reloading mid cycle to ensure proper drying.

Selectable Drying Options

Programme	Delay End	Anti Crease*1	Damp Alert*1
Cotton	●	●	●
Eco	●	●	●
Mixed Fabric	●	●	●
Quick 40	●	●	

Programme Table

Programme	Delay End	Anti Crease*1	Damp Alert*1
Easy Care	●	●	●
Activewear	●	●	
Wool	●	●	
Delicates	●	●	
Timed Dry	●	●	

*1 This option is available in the **LG ThinQ** application.

Customizing a Drying Programme

Each programme has default settings that are selected automatically. You may also customize these settings using these buttons.

Dry Level

It allows you to select a dryness level for the drying programme.

- 1 **Iron**: For fabrics that need to be ironed
- 2 **Cupboard**: For fabrics that do not need to be ironed
- 3 **Extra**: For thick and quilted fabrics

1 Turn the appliance on.

2 Select a programme.

3 Select a dryness level by pressing the **Dry Level** button repeatedly.

Dry Time

Use this option to manually select the drying time, from 20 to 180 minutes.

Follow the next steps to customize a drying programme:

1 Prepare the clothes and load the drum.

2 Press and hold the **Power** button for 1 second.

3 Select a drying programme.

4 Customize the drying programme (**Dry Level** and **Dry Time**) as necessary.

5 Press and hold the **Start/Pause** button for 1 second.

Using Extra Options

You can customize the programmes by using the following options:

Anti Crease

This feature is available with the **LG ThinQ** application.

It allows you to reduce creases that are formed when the clothes are not unloaded promptly at the end of drying cycle.

When the option is turned on, the appliance repeatedly runs for 10 seconds and pauses for 5 minutes. The option is turned off automatically after 2 hours at the end of drying cycle

NOTE

- When the option is set, only the **Power** button works after the drying cycle is end.
- When a drying cycle is running, pause the cycle first to set the option.
- Always turn off the appliance before unloading the clothes.

Damp Alert

This feature is available with the **LG ThinQ** application.

When this option is selected, the appliance signals when the load is approximately 80% dry. This allows you to remove faster-drying lightweight items or items that you would like to iron or hang while they are still slightly damp.

Delay End

It allows you to delay the finishing time of the drying cycle from 3 hours to 19 hours.

1. Turn the appliance on.
2. Select a programme.
3. Press the **Delay End** button.
4. Set time delay hour(s) by pressing the **Delay End** button.
5. Press and hold the **Start/Pause** button for 1 second.

NOTE

- Reservations can be made every hour from 3 to 19 hours, and reservations are not made for less than 3 hours.
- The reservation time and the actual end time may vary depending on the amount of drying.
- If you change the course by turning the operation dial after setting the reservation function, the reservation function is canceled.
- If the power is turned off due to a power outage, the reservation will be canceled.

Using Various Settings

Child Lock

It allows you to control the locking and unlocking of control panel. It prevents children from changing cycles or operating the appliance.

Locking the Control Panel

1. Press and hold the **Dry Time** and **Dry Level** button simultaneously for 3 seconds.
2. A chime will sound, and CL will appear on the display.
   - When the function is activated, all buttons are locked except for the **Power** button.

NOTE

- Turning off the power or completing all cycles will not reset the child lock function. You must deactivate child lock before you can access any other functions.

Unlocking the Control Panel

Press and hold the **Dry Time** and **Dry Level** button simultaneously for 3 seconds.

- A chime will sound and the remaining time for the current programme will reappear on the display.

Using Dryer Rack

Rack Dry

This programme is designed for use with clothes that must be dried flat, without tumbling, including sweaters and delicate fabrics.

To use the programme, you need a dryer rack that is placed inside the appliance. Before drying, discard packing materials of the dryer rack.

To use the programme, you need to download the cycle through the **LG ThinQ** application.

NOTE

- Some models are not sold with all of the available accessories, you may need to purchase the dryer rack first if it was not provided with your model. Please contact LG Electronics Customer Information Centre or visit the LG Website at http://www.lg.com for purchase.

1 Open the door.

2 Insert the hook of dryer rack to the drum centre.

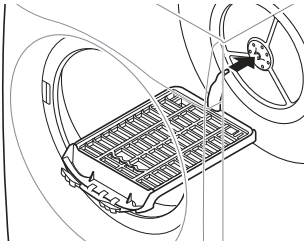

3 Once you have completed the fastening in the center hole of the drum, fasten the rack in three filter holes on each side of the filter.

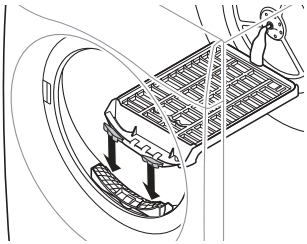

Look carefully at the filter hole and insert it. If you push the rack slightly inside the drum, it will fit better.

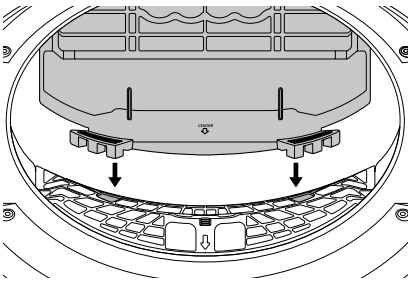

4 Place wet items on top of the rack. Allow space around items for air to circulate.

- The dryer rack does not move, but the drum will rotate.

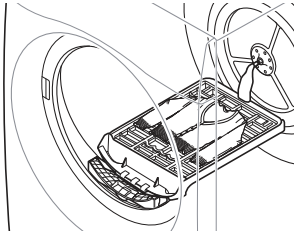

5 Close the door.

6 Turn power on and select **Download Cycle**.

7 Press and hold the **Start/Pause** button for 1 second.

NOTE

- Check the lint filter and remove any lint accumulated from items dried on the rack.
- The **Dry Time** key can be used to finely adjust the drying time.

Auto Condenser Cleaning

- This model is equipped with “Auto Condenser Cleaning”. It automatically cleans the condenser every specific number of times(about 30 times). Nevertheless, if you want to clean it, you can manually operate the cycle or you can clean it by yourself. Please refer to the page on condenser cleaning.

The **LG ThinQ** application allows you to communicate with the appliance using a smartphone.

LG ThinQ Application Features

Remote Start

Control the appliance remotely or check to see how much time is left in the cycle from the **LG ThinQ** application.

NOTE

- Once the remote control feature is enabled, you can start a cycle from the **LG ThinQ** application. If the cycle is not started, the appliance will wait to start the cycle until the appliance is turned off remotely or the remote control feature is disabled.
- If the door is opened, the remote control feature is disabled.

Download Cycle

You can download new and special cycles that are not included in the basic cycles on the appliance.

A variety of specialty cycles specific to the appliance can be downloaded to the successfully registered appliances.

Once cycle download is completed in the appliance, the appliance keeps the **Download Cycle** until a new cycle is downloaded.

NOTE

- Only one **Download Cycle** can be stored on the appliance at a time.

Smart Pairing

This function automatically selects the best cycle and settings for the dryer based on usage information about the most recently completed wash cycle.

NOTE

- To use this function, both washer and dryer must be connected to **LG ThinQ** application.

Smart Diagnosis

This function provides useful information for diagnosing and solving issues with the appliance based on the pattern of use.

Push Alert

When the cycle is complete or the appliance has problems, you will receive a push message.

Energy Monitoring*1

This feature keeps track of how the dryer’s power consumption is affected by selected drying cycles and options.

Settings

Allows you to set various options on the appliance and in the application.

*1 This feature is only available on some models.

NOTE

- In the following cases, you must update the network information for each appliance in the **LG ThinQ** application under **Device Cards** > **Settings** > **Change Network**.
  - wireless router is changed
  - wireless router password is changed
  - Internet service provider is changed
- This information is current at the time of publication. The application is subject to change for product improvement purposes without notice to users.

Installing LG ThinQ App and Connecting an LG Appliance

Models with QR Code

Scan the QR code attached to the product using the camera or a QR code reader app on your smartphone.

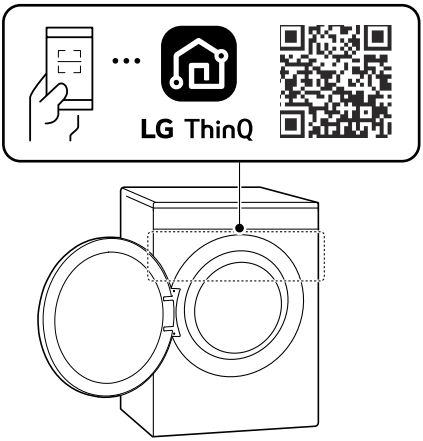

Models without QR Code

1. Search for and install the **LG ThinQ** app from the Google Play Store or Apple App Store on a smartphone.

2. Run the **LG ThinQ** app and sign in with your existing account or create an LG account to sign in.

3. Touch the add (+) button on the **LG ThinQ** app to connect your LG appliance. Follow the instructions in the app to complete the process.

NOTE

- You may be asked to provide a password to connect to the LG network (not your home network) during the Wi-Fi setup. The password is the last 4 characters of the network name, repeated twice, with no spaces. For example, if the network name appears as LG_XXXX_8b92, then you would enter 8b928b92 as your password. The password is case sensitive and the last 4 characters are unique to your appliance.
- To verify the Wi-Fi connection, check that the icon on the control panel is lit.
- The appliance supports 2.4 GHz Wi-Fi networks only. To check your network frequency, contact your Internet service provider or refer to your wireless router manual.
- **LG ThinQ** is not responsible for any network connection problems or any faults, malfunctions, or errors caused by network connection.
- If the appliance is having trouble connecting to the Wi-Fi network, it may be too far from the router. Purchase a Wi-Fi repeater (range extender) to improve the Wi-Fi signal strength.
- The Wi-Fi connection may not connect or may be interrupted because of the home network environment.
- The network connection may not work properly depending on the Internet service provider.
- The surrounding wireless environment can make the wireless network service run slowly.
- If the appliance cannot be connected due to problems with the wireless signal transmission, unplug the appliance and wait about a minute before trying again.
- If the firewall on your wireless router is enabled, disable the firewall or add an exception to it.
- The wireless network name (SSID) should be a combination of English letters and numbers. (Do not use special characters.)
- Smartphone user interface (UI) may vary depending on the mobile operating system (OS) and the manufacturer.
- If the security protocol of the router is set to **WEP**, network setup may fail. Change the security protocol (**WPA2** is recommended) and connect the product again.

Activating Network Connection

1. Run the **LG ThinQ** application.
2. Select and touch the **Dryer** in the application.
3. Press the **Power** button on the control panel.
4. Press and hold **Wi-Fi** button for 3 seconds on the control panel.

- The **Wi-Fi** LED blinks during the connection process.

Using the Appliance Remotely

Remote Start

Use a smartphone to control the appliance remotely. You can also monitor the cycle operation so you know how much time is left in the cycle.

Using Remote Start

1. Put the laundry into the drum and close the dryer door.
2. Press the **Power** button.
3. Press and hold the **Remote Start** button for 3 seconds to enable the remote control function.
4. Start a cycle from the **LG ThinQ** application on your smartphone.

NOTE

- Once the function is enabled, you can start a cycle from the **LG ThinQ** smartphone application. If the cycle is not started, the application will wait to start the cycle until it is turned off remotely from the application or this function is disabled.
- If the door has been opened, you cannot start a cycle remotely.

Disabling Remote Start Manually

When the function is activated, press and hold the **Dry Level** button for 3 seconds.

Deactivating Network Connection

1. Press the **Power** button on the control panel.
2. Press and hold the **Dry time** and **Delay End** buttons simultaneously for 3 seconds to deactivate Network Connection.

Radio Equipment Specifications

Type	Operating Frequency Range	Output Power (Max.)
Wireless LAN	2400 MHz - 2483.5 MHz	< 100 mW
Bluetooth *1		

*1 This feature is only available on some models.

For consideration of the user, this device should be installed and operated with a minimum distance of 20 cm between the device and the body.

Effect of Network Activation on Power Consumption

The activation of the network connection may increase the power consumption of the appliance.

Declaration of Conformity

CE

Hereby, LG Electronics declares that the radio equipment type Dryer is in compliance with Directive 2014/53/EU. The full text of the EU declaration of conformity is available at the following internet address:

http://www.lg.com/global/support/cedoc/cedoc#

Declaration of Conformity for UK

Hereby, LG Electronics declares that the radio equipment type Dryer is in compliance with the relevant statutory requirements. The full text of the UK declaration of conformity is available at the following internet address :

http://www.lg.com/global/support/cedoc/cedoc#

Smart Diagnosis

Use this feature to help you diagnose and solve problems with your appliance.

NOTE

- For reasons not attributable to LGE's negligence, the service may not operate due to external factors such as, but not limited to, Wi-Fi unavailability, Wi-Fi disconnection, local app store policy, or app unavailability.
- The feature may be subject to change without prior notice and may have a different form depending on where you are located.

Using LG ThinQ to Diagnose Issues

If you experience a problem with your Wi-Fi equipped appliance, it can transmit troubleshooting data to a smartphone using the **LG ThinQ** application.

- Launch the **LG ThinQ** application and select the **Smart Diagnosis** feature in the menu. Follow the instructions provided in the **LG ThinQ** application.

Using Audible Diagnosis to Diagnose Issues

Follow the instructions below to use the audible diagnosis method.

- Launch the **LG ThinQ** application and select the **Smart Diagnosis** feature in the menu. Follow the instructions for audible diagnosis provided in the **LG ThinQ** application.

1 Press the **Power** button to turn on the appliance.
   - Do not press any other buttons.

2 Place the mouthpiece of your smartphone close to the **Power** button.

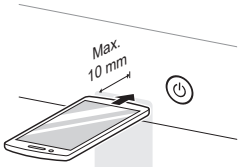

3 Press and hold the **Dry Time**, **Dry Level** and **Delay End** buttons for 3 seconds or longer while holding the smartphone mouthpiece to the **Power** button until the data transfer is complete.
   - Keep the smartphone in place until the data transfer has finished. Time remaining for data transfer is displayed.

4 After the data transfer is complete, the diagnosis will be displayed in the application.

NOTE

- For best results, do not move the smartphone while the tones are being transmitted.

⚠ WARNING

- Remove the power plug when you clean the appliance. Not removing the plug may result in electric shock.

Cleaning the Lint Filters

⚠ CAUTION

- Clean the lint filters in the proper way referring to the following instructions. Failure to do so, the lint that is accumulated on the radiator may not be cleaned properly.
- When the lint drops into the filter inlet, it may cause less efficient drying performance and increase of drying time.

NOTE

- Unload all of the laundries from the appliance before pull out the lint filters.
- Put the lint filters back in place after cleaning. If the lint filters are not in the appliance, you can not operate the appliance.
- when cleaning the filters, the lint should be thrown in the trash and not washed through the drain in order to avoid spreading microplastics in the used water system.

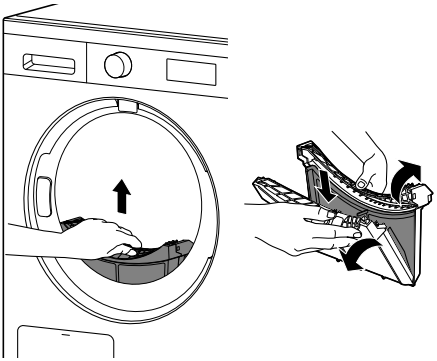

Inner Filter

- Always clean the inner filter before and after use.

Outer Filter

- Clean the outer filter after drying 10 times or when the lint is accumulated into the outer filter.

Clean the inner filter

1 Pull out the inner filter from the outer filter and then open the inner filter.

- Open the filter by unfolding it in the direction of the arrows.

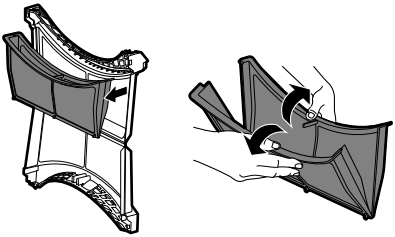

2 Remove large clusters of lint by hand, then use a vacuum cleaner to clean remaining lint.

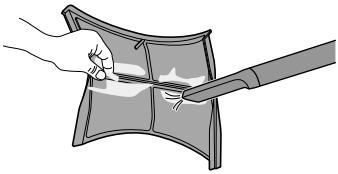

- Avoid using excessive force to prevent damaging the filter.
- Dry the filter completely if the filter is moist. Failure to do so, odour may occur in the appliance.
- Throw lint in the trash.

3 Insert the inner filter into the outer filter.

Clean the outer filter

1 Remove large clusters of lint by hand, then use a vacuum cleaner to clean remaining lint.

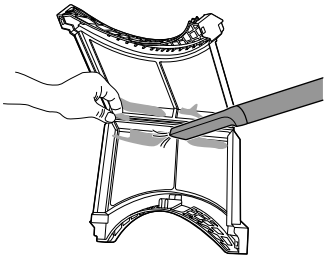

- Avoid using excessive force to prevent damaging the filter.
- Dry the filter completely if it is moist. Failure to do so may result in odour in the appliance.
- Throw lint in the trash.

NOTE

- Ensure the side of the filter is closed properly. Failure to do so, any lint accumulated on the filter may get into the appliance and may cause degradation of the drying performance.

2 Insert the inner filter into the outer filter and close the outer filter.

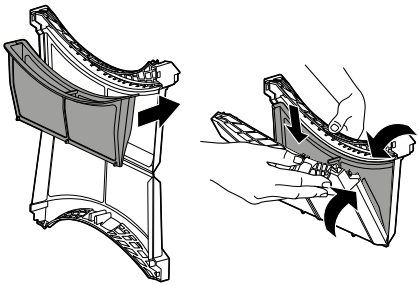

3 Reinsert the lint filter set to the dryer.

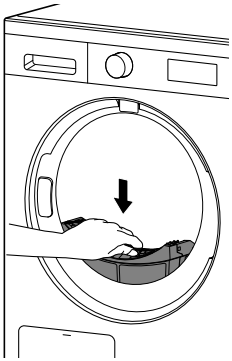

⚠ CAUTION

- Do not load or remove any clothes when the lint filter is not in place. The clothes can drop into the filter inlet and it may cause the appliance to malfunction.

Emptying the Water Container

Condensed water is collected in the water container.

Empty the water container after every use. Not doing so will affect the drying performance.

NOTE

- If the water container is full, the icon glows and d:rn will appear on the display and a chime will sound while the application is operating. If this occurs, empty the water container.
- If the appliance does not have an optional drain hose connected, the water container should be emptied. When the condensed water is drained out directly through the optional drain hose, there is no need to empty the water container.

1 Pull out the water container.

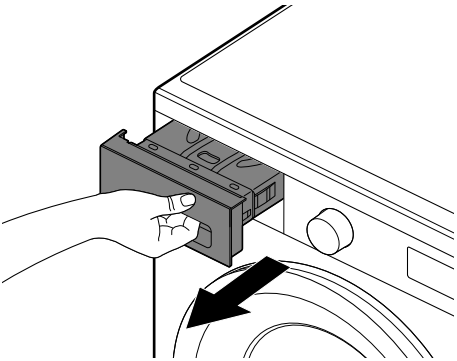

2 Empty the water container into the sink.

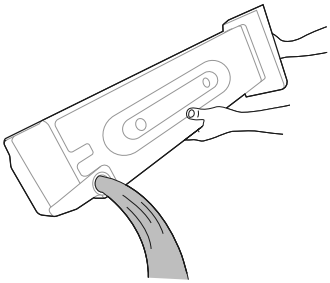

⚠ CAUTION

- Do not drink the condensed water or reuse it. It could be lead to health problems for people and animals.

3 Refit it back into the appliance.

- Push in the water container fully into the appliance until it is in place.

4 Press and hold the **Start/Pause** button for 1 second.

Ventilating inside the drum

To help prevent odours, leave the door slightly open to help air out the drum after use.

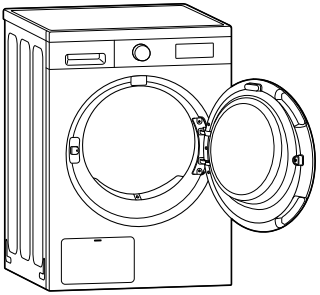

Wiping the Moisture Sensor

This device senses the moisture level of the clothes during operation, which means it must be cleaned **once every six months** to remove any build-up of lime scale on the surface of the sensor.

Wipe the sensors inside the drum.

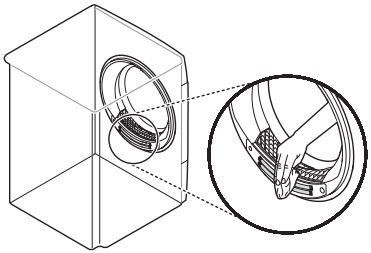

⚠ CAUTION

- Do not wipe the moisture sensor with abrasive materials. Always clean the sensor with a dry rough acrylic sponge.

Using Drum Clean Feature

With time and use, the appliance may form unpleasant odours that leave your clothes smelling after drying. Using this cleaning function **once a month (or after drying 30 times)** helps to reduce the unpleasant odours from the appliance.

To use the programme, you need to download the cycle through the **LG ThinQ** application.

⚠ CAUTION

- Remove all of the clothes from the appliance.

1. Pull out the water container, empty the condensed water from it and refit the water container back into the appliance.
2. Turn on the appliance.
3. Select **Download Cycle** programme.
4. Press and hold the **Start/Pause** button for 1 second.
   - This function operates for about 3 hours.
5. Empty the water container after the function has finished.

NOTE

- When the optional drain hose is installed, there is no need to empty the water container.

6. Open the dryer's door to provide the appliance with enough air circulation for exhausting any remaining odours.

⚠ WARNING

- For safety reasons, do not allow children or animals to enter the appliance. It may cause damage or injury.

Using Condenser Clean Feature

The appliance washes lint, which builds up onto the surface of the condenser, automatically using water that is condensed from the clothes during operation. Using this cleaning function **once a month (or after drying 30 times)** helps to wash the lint.

⚠ CAUTION

- Remove all of the clothes from the appliance.

1 Pull out the water container and empty the water container.

2 Pour 1 litre of clean water slowly into the entrance of the water container compartment. Then refit the empty water container into the compartment.
   - Do not pour the water quickly as it will spill out.
   - Pouring more that 1.0 litres of water into the compartment will cause water to leak back out.

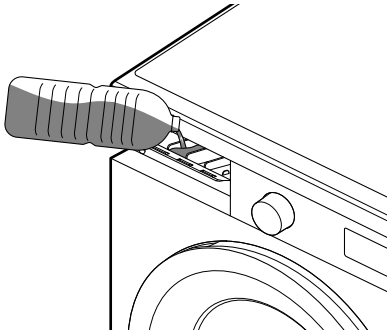

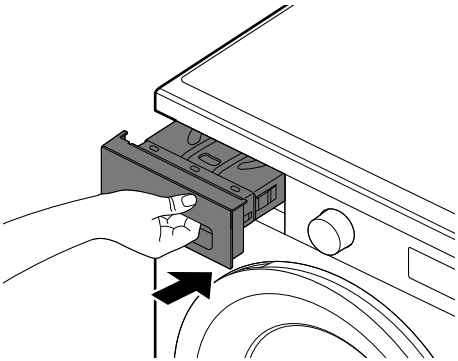

3 Turn on the appliance.

4 Press and hold the **Condenser Care** button for 3 seconds.

5 Press and hold the **Start/Pause** button for 1 second to start the cleaning of the condenser.
   - The cleaning of the condenser proceeds for 1 hour.

6 Empty the water container after the cleaning is finished.

NOTE

- When the optional drain hose is installed, there is no need to empty the water container.

7 Open the dryer's door to provide the appliance with enough air circulation for more thorough drying of the tub after the cleaning has ended.

⚠ WARNING

- For safety reasons, do not allow children or animals to enter the appliance. It may cause damage or injury.

Cleaning the Condenser

This model is equipped with "Auto Condenser Cleaning". However, if you want to clean the condenser manually, follow the instructions in this manual.

⚠ CAUTION

- To avoid physical injury and burns, do not touch or clean the condenser with bare hands.
- When cleaning the condenser, be careful not to damage the fins.

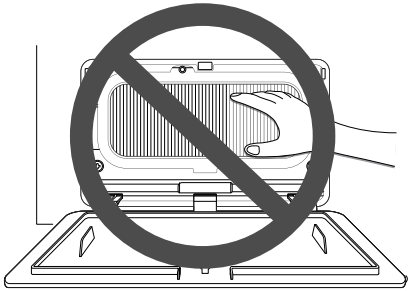

NOTE

- If drying performance deteriorates, open the condenser cover to check for foreign substances or lint build up.

1 Press the top part of the access panel ❶ to open it.

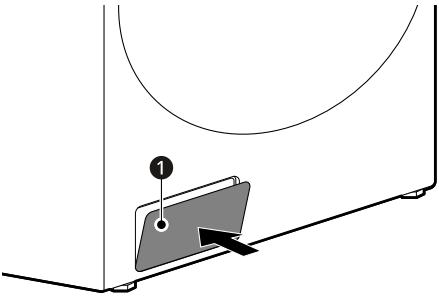

2 Turn the locks ❷ to release the condenser cover, and pull the cover to remove it.

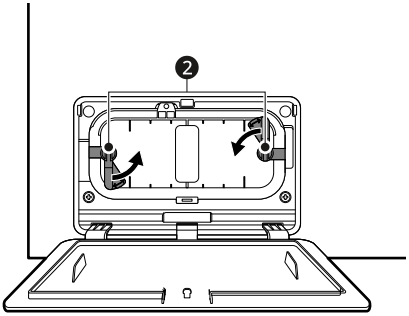

3 Clean the dust on the condenser using a vacuum cleaner or soft brush. Apply only gentle pressure and clean in a vertical direction so as not to damage the fins.

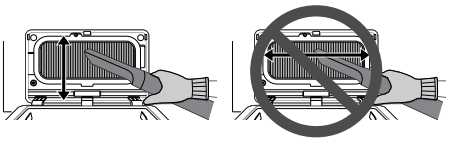

4 Fit the cover with the hole below.

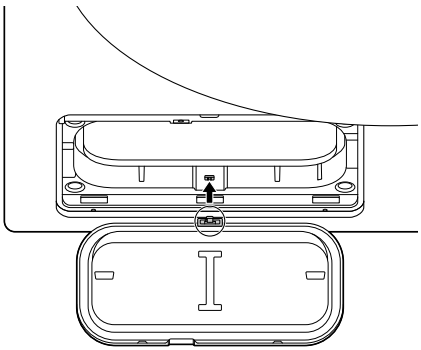

5 Reinsert and reassemble the condenser cover completely.

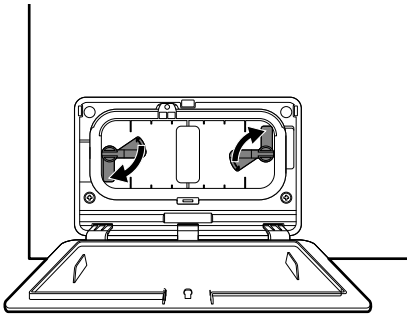

⚠ CAUTION

- If the condenser cover is not completely reassembled, the product will not work properly and may leak onto the floor during operation.

6 Close the access panel.

Errors and malfunctions may occur when operating the appliance. The following tables contain possible causes and notes for resolving an error message or malfunction. Read the tables below carefully in order to save time and money before calling the LG Electronics service centre.

Your appliance is equipped with an automatic error-monitoring system to detect and diagnose problems at an early stage. If the appliance does not function properly or does not function at all, check the following tables before calling to LG Electronics service centre.

Error Messages

Symptoms	Possible Cause & Solution
dE1 **DOOR ERROR**	**The door has been opened while the appliance is in operation or the appliance is being operated without the door being closed properly.** • Close the door completely. • If dE1 is not released, call for service.
dE4 **DOOR ERROR**	**Door switch detection is not working properly.** • Unplug the power plug and call for service.
tE1 / tE2 / tE4 **TEMPERATURE ERROR**	**Temperature Sensor has malfunctioned.** • Unplug the power plug and call for service.
F1 **TEMPERATURE ERROR**	**The temperature inside the drum has risen suddenly.** • Unplug the power plug and call for service.
F1 **COMPRESSOR ERROR**	**The compressor has malfunctioned.** • Unplug the power plug and call for service.
LE1 **MOTOR LOCKED ERROR**	**The motor has stopped suddenly.** • Check if the amount of clothes exceeds the maximum load capacity. • Unplug the power plug and call for service.

Before Calling for Service

Symptoms	Possible Cause & Solution
OE **DRAIN PUMP ERROR**	**The drain pump motor has malfunctioned.** • Unplug the power plug and call for service.
IF **NONE LINT FILTER ERROR**	**The lint filter is not in the appliance.** • Insert the lint filter.
PS **VOLTAGE ABNORMALITY**	**Supply voltage is not correct.** • Unplug the appliance. If error reoccurs, call for service.
CC **CONDENSER COVER ERROR**	**The appliance is being operated without the Inner Condenser cover.** • Open the Outer Condenser Cover. Assemble the Inner Condenser Cover. If the error reoccurs, call for service.
CL **CHILD LOCK FUNCTION**	**The Child Lock function is on to prevent anyone from changing cycles or operating the dryer.** • Turn off the **Child Lock** function in the control panel. See **Child Lock** under **Extra Options and Functions**.
[ ] → End	**This is how the anti crease option works.** • Make sure that the anti crease option has been set. The option is designed to prevent creases that are formed when the clothes are not unloaded promptly after the drying cycle. When the option is set, the appliance runs for 10 seconds and pauses for 5 minutes. The option is works for up to 2 hours. • Press the **Power** button and unload the clothes.
d:rn **EMPTY WATER**	**Water container is full.** • Empty water container in the sink.

Operation

Symptoms	Possible Cause & Solution
Appliance will not turn on.	**Power cord is not properly plugged in.** • Make sure that the power plug is securely plugged into a grounded outlet matching the appliance's rating plate.
	House fuse is blown, circuit breaker has tripped, or power outage has occurred. • Reset circuit breaker or replace fuse. Do not increase fuse capacity. If the problem is a circuit overload, have it corrected by a qualified electrician.
Appliance does not heat.	**House fuse is blown, circuit breaker has tripped, or power outage has occurred.** • Reset circuit breaker or replace fuse. Do not increase fuse capacity. If the problem is a circuit overload, have it corrected by a qualified electrician.
Water leaks.	**The water container hose or the optional drain hose is not connected correctly.** • Connect the water container hose or the optional drain hose correctly.
	The door is closed while clothes or foreign substance is caught in the door. • Check if clothes or foreign substance is caught in the door before using the appliance. If water leaks continuously, contact the LG Electronics Customer Information Centre.
Appliance runs and pauses by itself after the drying cycle finishes.	**This is how the Anti Crease option works.** • Make sure that the **Anti Crease** option has been set. The option is designed to prevent creases that are formed when the clothes are not unloaded promptly after the drying cycle. When the option is set, the appliance runs for 10 seconds and pauses for 5 minutes. The option is works for up to 2 hours.

Performance

Symptoms	Possible Cause & Solution
Clothes take too long to dry.	**Load is not properly sorted.** • Separate heavy items from lightweight items. Larger and heavier items take longer to dry. Light items in a load with heavy items can fool the sensor because the light items dry faster.
	Large load of heavy fabrics. • Heavy fabrics take longer to dry because they tend to retain more moisture. To help reduce and maintain more consistent drying times for large and heavy fabrics, separate these items into smaller loads of a consistent size.
	Appliance controls are not set properly. • Use the appropriate control settings for the type of load you are drying. Some loads may require an adjustment of the dry level setting for proper drying.
	Lint filter needs to be cleaned. • Remove the lint from the lint filter before every cycle. With the lint removed, hold the lint filter up to a light to see if it is dirty or clogged. With some loads that produce high amounts of lint, such as new bath towels, it may be necessary to pause the cycle and clean the filter during the cycle.
	House fuse is blown, circuit breaker has tripped, or power outage has occurred. • Reset circuit breaker or replace fuse. Do not increase fuse capacity. If the problem is a circuit overload, have it corrected by a qualified electrician.
	Appliance is overloaded. • Divide extra large loads into smaller loads for better drying performance and efficiency.

Symptoms	Possible Cause & Solution
Clothes take too long to dry.	**Appliance is underloaded.** • If you are drying a very small load, add a few extra items to ensure proper tumbling action. Drying too few clothes or drying too many clothes may result in the cycle ending with clothes that are not fully dry. In this case, you can dry them additionally by setting the desired time in the timed drying programmes.
Drying time is not consistent.	**Heat settings, load size, or dampness of clothing is not consistent.** • The drying time for a load will vary depending on the type of heat used (electric), the size of the load, the type of fabrics, the wetness of the clothes, and lint filter. Even an unbalanced load in the appliance can cause poor spinning, resulting in wetter clothes which will take longer to dry.
Greasy or dirty spots are left on clothes.	**Fabric softener is used incorrectly.** • When washing clothes that are to be dried in the appliance, use the correct amount of fabric softener as recommended by the manufacturer of the fabric softener.
	Clean and dirty clothes are being dried together. • Use the appliance to dry only clean items. Soil from dirty clothes can transfer to the clean clothes in the same or later loads.
	Clothes were not properly cleaned or rinsed before being placed in the appliance. • Stains on dried clothes could be stains that were not removed during the washing process. Make sure that clothes are being completely cleaned or rinsed according to the instructions for your washing machine and detergent. Some difficult soils may require pre-treating prior to washing.
Clothes are wrinkled.	**Clothes have dried too long (overdried).** • Over drying a load of clothes can lead to wrinkled clothes. Try a shorter drying time.
	Clothes have been left in the appliance for too long after cycle ends. • Use the **Anti Crease** option.

Symptoms	Possible Cause & Solution
Clothes are shrinking.	**Garment care instructions are not being followed.** • To avoid shrinking your clothes, always consult and follow fabric care instructions. Some fabrics will naturally shrink when washed. Other fabrics can be washed but will shrink when dried in the appliance. Use a low or no heat setting.
Lint is left on clothes.	**Lint filter has not been cleaned properly.** • Remove the lint from the lint filter after every cycle. With the lint removed, hold the lint filter up to a light to see if it is dirty or clogged. If it looks dirty, follow the cleaning instructions. With some loads that produce high amounts of lint, it may be necessary to clean the lint filter during the cycle.
	Clothes have not been sorted properly. • Some fabrics are lint producers (i.e., a fuzzy white cotton towel) and should be dried separately from clothes that are lint trappers (i.e., a pair of black linen pants).
	Appliance is overloaded. • Divide extra large loads into smaller loads for drying.
	Tissue, paper, etc., has been left in pockets. • Check pockets thoroughly before drying clothes.
Excess static in clothes after drying.	**Clothes have dried for too long (overdried).** • Overdrying a load of clothes can cause a buildup of static electricity. Adjust settings and use a shorter drying time.
	Drying synthetics, permanent press, or synthetic blends. • These fabrics are naturally more prone to static buildup. Try using fabric softener, or use shorter time settings.

Symptoms	Possible Cause & Solution
Clothes have damp spots after a Dry programme.	**Very large load or very small load. Single large item such as a blanket or comforter.** • If items are too tightly packed or too sparse the sensor may have trouble reading the dryness level of the load. Use timed drying programmes for very small loads. • Large, bulky items such as blankets or comforters can sometimes wrap themselves into a tight ball of fabric. The outside layers will dry and register on the sensors, while the inner core remains damp. When drying a single bulky item, it may help to pause the cycle once or twice and rearrange the item to unwrap and expose any damp areas. • To dry a few remaining damp items from a very large load or a few damp spots on a large item after a Dry programme has completed, empty the lint filter, then set timed drying programmes to finish drying the item(s).

Odours

Symptoms	Possible Cause & Solution
The appliance has an odour.	**Are you using the appliance for the first time?** • The smell is caused by rubber material that is attached to the appliance inside. This kind of smell is a rubber's own smell and disappears automatically after using the appliance several times.

Before Calling for Service

Symptoms	Possible Cause & Solution
The appliance has an odour.	**Do you smell an odour during use?** • Do not exceed the manufacturer's recommended amount of detergent when washing clothes. Excess detergent can build up on clothing and cause odours. • Leaving clothes in the washer or dryer after the cycle ends can lead to odors. Unload clothing promptly when the cycle ends. • Keep lint filters clean. Clogged or dirty lint filters can cause odors. After cleaning the lint filter, allow it to dry completely before using it. • For ventless models, leave the dryer door open after drying, or use the magnetic door stop (on some models) to keep the door slightly ajar. • If the odor is coming from the washer, follow the instructions in the product manual to clean the washer tub/drum. • Periodically run the Drum Care and Condenser Care cycles following the instructions in the **MAINTENANCE** section.

Stains

Symptoms	Possible Cause & Solution
After removing the tape on the Top Plate, water spots remained.	**In hot, humid environments, water spots may appear on the Top Plate surface.** • Leave the dryer at room temperature for a day or run 1 drying cycle. If the issue persists, use a hair dryer to blow hot air onto the surface.

Wi-Fi

Symptoms	Possible Cause & Solution
Your home appliance and smartphone is not connected to the Wi-Fi network.	**The password for the Wi-Fi that you are trying to connect to is incorrect.** • Find the Wi-Fi network connected to your smartphone and remove it, then register your appliance on **LG ThinQ**.
	Mobile data for your smartphone is turned on. • Turn off the **Mobile data** of your smartphone and register the appliance using the Wi-Fi network.
	The wireless network name (SSID) is set incorrectly. • The wireless network name (SSID) should be a combination of English letters and numbers. (Do not use special characters.)
	The router frequency is not 2.4 GHz. • Only a 2.4 GHz router frequency is supported. Set the wireless router to 2.4 GHz and connect the appliance to the wireless router. To check the router frequency, check with your Internet service provider or the router manufacturer.
	The appliance is too far from the router. • If the appliance is too far from the router, the signal may be weak and the connection may not be configured correctly. Move the location of the router so that it is closer to the appliance.

Customer Care and Service

Contact an LG Electronics customer information centre.

- To find an LG Electronics authorised service personnel, visit our website at **www.lg.com** and follow the instructions found there.
- Self-repair is not recommended as it could further damage the device and void the guarantee.
- Spare parts referenced in Regulation 2023/2533 are available for a minimum duration of 10 years.

Installation Location

⚠ WARNING

- Do not install the appliance around a heat source. The rear side of the appliance must be well ventilated. Failure to follow these instructions may result in problems.
- The appliance is not designed for maritime use or for use in mobile installation such as caravans, aircraft and etc.
- Do not install the appliance as a built-in appliance. It is not suitable for built-in purpose.

NOTE

- For better drying performance, keep the rear of the appliance away from the wall.

- Make sure that the location where the appliance will be installed meets a minimum clearance conditions.
- Install the appliance on a flat hard floor. Allowable slope under the appliance is 1 degree.
- Never try to correct any unevenness in the floor with pieces of wood, cardboard or similar materials under the appliance.
- Install the appliance in a location where service engineers are easily accessible in the event of a breakdown.
- Do not install the appliance next to high-temperature appliances such as refrigerator, oven or stove, and etc. It can cause poor drying performance and delay programme duration. It also adversely affect the proper functioning of the compressor.
- Do not install the appliance where there is a risk of frost or dust. The appliance may not be able to operate properly or may be damaged by freezing of condensed water in the pump and drain hose.
- With the appliance installed, adjust all four feet using a spanner to ensure the appliance is stable, and a clearance of approximately 20 mm is left between the top of the appliance and the underside of any work-top.

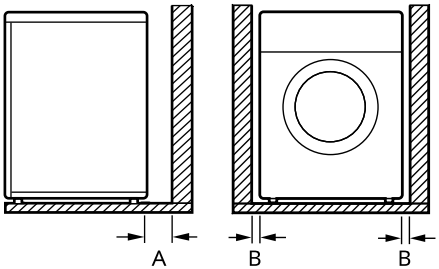

Index	Clearance (mm)
A	100
B	20

Ventilation

- Alcove or under counter
  - Make sure that air circulation around the appliance should not be impeded by carpets, rugs, etc.
- Cupboard

- Cupboard door must have 2 (louvered) opening, each have a minimum area of 387 cm^2, located 8 cm from bottom and top of the door.

Ambient Temperature

- Do not install the appliance in rooms where freezing temperatures may occur. Frozen hoses may burst under pressure. The reliability of the electronic control unit may be impaired at temperatures below freezing point.

NOTE

- If the appliance is delivered in winter and temperatures are below freezing, place the appliance at room temperature for a few hours before putting it into operation.
- The appliance performs best at a room temperature of 23 °C.

Electrical Connection

- Do not use an extension cord or double adapter.
- Do not overload the outlet with more than one appliance.
- Connect the appliance to an earthed socket in accordance with current wiring regulations.
- The appliance must be positioned a place close to outlet socket so that the plug is easily accessible.
- Outlet socket must be within 1.5 meters of either side of the location of the appliance.

NOTE

- Always unplug the appliance after use.

Leveling the Appliance

Checking Leveling

Leveling the appliance prevents unnecessary noise and vibration. Check whether the appliance is perfectly level after installation.

- If the appliance rocks when pushing the top plate of the appliance diagonally, adjust the feet again.

NOTE

- Timber or suspended type flooring may contribute to excessive vibration and unbalance. Re-enforcement or bracing of the timber floor may need to be considered to stop or reduce excessive noise and vibration.
- Do not install the appliance on any elevated surface, stand or plinth as it can become unstable and fall causing serious injury and damage.

Adjusting and Leveling the Appliance

When the appliance is not perfectly level, turn the adjustable feet until the appliance no longer wobbles.

- Turn the adjustable feet clockwise to raise or turn the adjustable feet counterclockwise to lower from front-to-back, side-to-side and corner-to-corner.

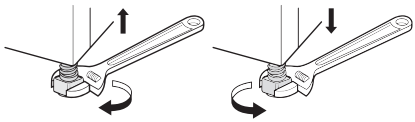

Stacking Kit

In order to stack the appliance, an LG stacking kit is required.

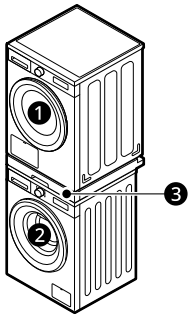

❶ Dryer
❷ LG Front Load Washing Machine
❸ Stacking Kit

⚠ CAUTION

- The appliance may only be stacked on top of an LG front load washing machine. Do not attempt to stack the appliance on any other washing machine, as it could result in damage, injury or property damage.

Installation Procedure

⚠ WARNING

- For safety reasons, installation procedure should be performed by two or more qualified service personnel.
- The weight of the appliance and the height of the installation makes the installation procedure too risky for one person.
- Incorrect installation can cause serious accidents.
- Do not operate if the appliance is not properly stacked.

NOTE

- The stacking kit should be aligned depending on the depth of the washing machine. (When you open the door or look at the side of the washing machine, you can find the dimension information of your washing machine at the label.)

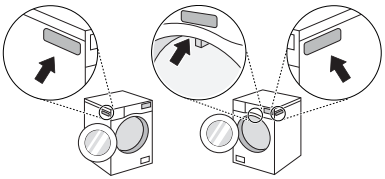

Installing the Optional Drain Hose

Normally, condensed water is pumped up to the water container where water is collected until manually emptied. Water can also be drained out directly to a mains drain, especially when the appliance is stacked on top of a washing machine. With the connecting elbow or T piece of the mains drain hose, simply change the water path and re-route to the drainage facility as below:

Stacking Instructions

1 Separate the anti-backflow lid ❶ and the water container hose ❷ from the connecting elbow or T piece.

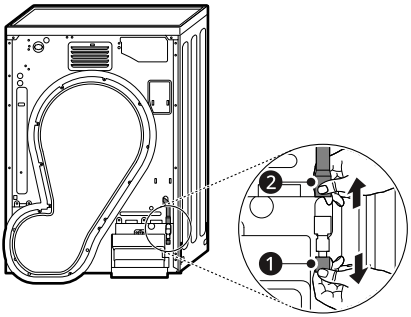

2 Attach the anti-backflow lid ❶ to the head of the connecting elbow or T piece and then connect the optional drain hose ❸ to the opposite side of the connecting elbow or T piece.

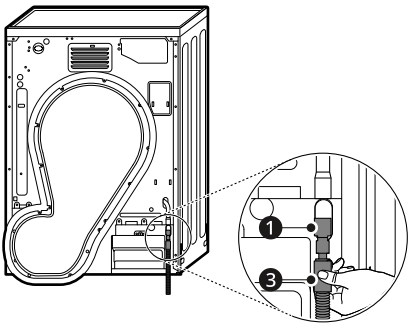

3 The drain hose should not be placed higher than 150 cm above the floor. Water in the appliance may not drain or may drain slowly.

- Securing the drain hose correctly will protect the floor from damage due to water leakage.

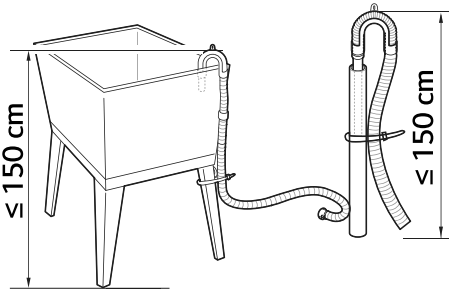

- If the drain hose is too long, do not force it back into the appliance. This will cause abnormal noise.
- When installing the drain hose to a sink, secure it tightly with string.

⚠ CAUTION

- If the optional drain hose is installed in a way that leaves it bent or pinched, drainage may not function properly.

Front View

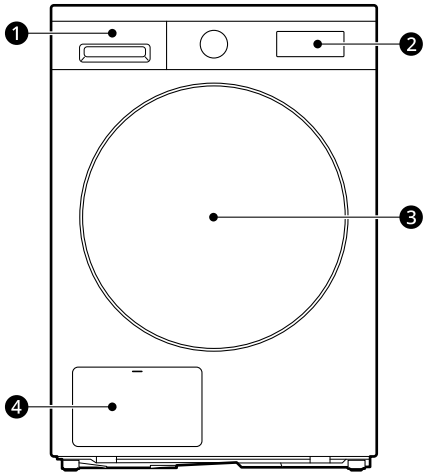

❶ Water Container
❷ Control Panel
❸ Door
❹ Condenser Cover

Available Accessories

Please contact LG Electronics Customer Information Centre or visit the LG Website at http://www.lg.com for purchase.

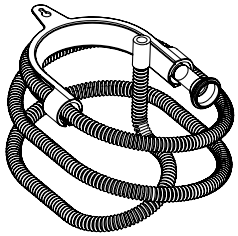	 Condensing Drain Hose
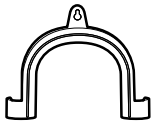 Elbow Bracket for Securing Drain Hose	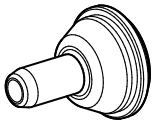 Drain Hose Holder

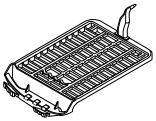 Dry Rack*1	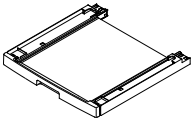 Stacking Kit*1

*1 This can be purchased separately.

NOTE

- In order to stack the appliance, the stacking kit should be purchased separately.

Consumption Data

Unit Description

kg: Laundry load (Weight of dry laundry)

rpm (spun at): Selected spin speed in washing machine

Initial (%): Remaining moisture of laundry after spinning

h:mm: Programme duration

kWh: Energy consumption

dB: Sound power level

Common Programmes

Programme	kg	rpm (spun at)	Initial (%)	h:mm	kWh
Delicates	1.5	800	45	1:25	0.60
Wool	1	800	35	0:40	0.22
Cotton + 3 (**Extra**)	8	1400	60	3:35	1.93
	4	1400	60	2:20	1.17
Cotton + 1 (**Iron**)	8	1400	60	2:15	1.21
	4	1400	60	1:25	0.69
Easy Care + 2 (**Cupboard**)	4	1400	40	1:15	0.54
Easy Care + 1 (**Iron**)	4	1400	40	1:00	0.42

Standard Programmes

Programme	kg	h:mm	kWh	dB
Eco + 2 (**Cupboard**)*1	8	2:47	1.46	64
	4	1:48	0.80	-

*1 Test programme based on 60% moisture content in accordance with Regulation (EU) 2023/2534 for energy labelling, measured in accordance with EN 61121

Technical Data

NOTE

- The test results depend on room temperature, type and amount of load, residual moisture levels after spinning, fluctuations in the main electricity supply and chosen additional options.
- The values for the common programmes other than the standard programmes are indicative only.
- Scan the QR code on the energy label supplied with the appliance, which provides a web link to the information related to the performance of the appliance in the EU EPREL database. Keep the energy label for reference together with the owner's manual and all other documents supplied with the appliance.
- The model name can be found on the rating label of the appliance, open the door which is just around the opening to the drum.
- To find the same information in EPREL, visit https://eprel.ec.europa.eu and search using the model name.

Note for Test Institutes

- A drain hose should be connected to the appliance for the test in accordance with EN61121 and Directive 2023/2533. If the drain hose is not connected to the appliance, connect the drain hose to the appliance by referring to **Installing the Optional Drain Hose**.
- Set programme at **Eco** ⬭ + 2 (**Cupboard**) (Full & Half Load) for test in accordance in conformity with EN61121 and Directive 2023/2533.
- **Eco** ⬭ + 2 (**Cupboard**) is suitable to dry wet cotton laundry, and that this programme is used to assess the compliance with EN 61121 and Directive 2023/2533.
- **Eco** ⬭ + 2 (**Cupboard**) is the most efficient programme in terms of energy consumption for drying wet cotton laundry.
- The test results depend on room temperature, type and amount of load, water hardness, fluctuations in the main electricity supply and chosen additional options.

Specifications

Asterisk(s) means model variant and can be varied (0-9) or (A-Z).

Description	Value
Model	RHX1008N**
Power supply	220 - 240 V~, 50 Hz
Product weight	53 kg
Allowable temperature	5 - 35 °C

Dimension(mm)

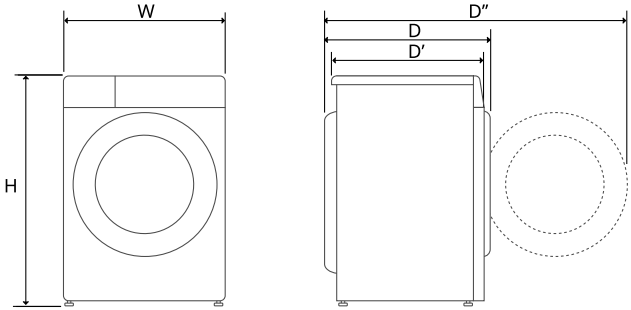

W	600	D	660	D"	1115
H	850	D'	614		

Open Source Software Notice Information

To obtain the source code that is contained in this product, under GPL, LGPL, MPL, and other open source licenses that have the obligation to disclose source code, and to access all referred license terms, copyright notices and other relevant documents, please visit https://opensource.lge.com.

LG Electronics will also provide open source code to you on CD-ROM for a charge covering the cost of performing such distribution (such as the cost of media, shipping, and handling) upon email request to opensource@lge.com.

This offer is valid to anyone in receipt of this information for a period of three years after our last shipment of this product.

Memo

LG