Printing Specification

1. Specification

Models	1. Model Name:	86UT801C0SB
	2. Suffix:	TM
	3. Part No:	MFL72097717
	4. REV	REV00
	5. Number of pages	16
	6. Folded/Unfolded	3 Folded
SIZE	7. Trim size (W x H)_Unfolded (mm)	296 x 420 (+/-5)
	8. Trim size (W x H)_folded (mm)	148 x 105 (+/-5)
	9. Bindery	-
COVER	10. Color (Cover)	-
	11. Paper (Cover)	-
	12. Weight (cover) (g/m^2)	-
INNER	13. Color (inner)	4(CMYK)
	14. Paper (inner)	Wood free
	15. Weight (inner) (g/m^2)	70(+/-10)
	16. Coating	No
	17. Thomson	No
	18. Sub-material	No
	19. Languages	ENG

1.1 Folding / Cover

Folded Step

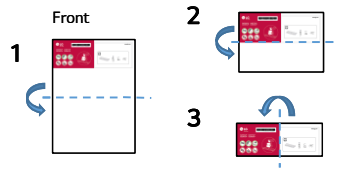

Folded

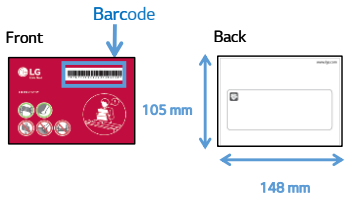

2. Origin Notification

Changes the Country name.

Printed in Korea
Copyright © 2021 LG Electronics Inc. All Rights Reserved.
← Printed in [Country Name in English]

Imprimé en Corée
Copyright © 2021 LG Electronics inc. Tous droits réservés.
www.lg.com
← Imprimé en(au) [Country Name in French]

[blank]

[PRODUZIDO NO POLO INDUSTRIAL DE MANAUS
CONHEÇA A AMAZÔNIA
LG Electronics do Brasil Ltda.
CNPJ: 01.166.372/0008-21
Rua Javari, nº 1004, Distrito Industrial, CEP 69075-110, Manaus/AM, Indústria Brasileira]

[Country Name] (ENG/FRE)	
LGERS / LGEMX :	Printed in Mexico Imprimé au Mexique
LGEKR :	Printed in Korea Imprimé en Corée
LGEMA :	Printed in Poland Imprimé en Pologne
LGEND :	Printed in China Imprimé en Chine
LGEIN :	Printed in Indonesia Imprimé en Indonésie
Brazil :	Printed in [Each Country name] [Image] (LGEAZ production only)
Others :	Each Country name.

NOTE

[Restriction of Hazardous Substances]

Hazardous substances on this product should be satisfied by substance regulation of Level A-I, A-II, SVHC according to LG(52)B-5011 standard.
Especially, Part should be followed and controlled the following specification.

(1) Hazardous substances test report should be submitted when part certification test and first mass production.
(2) Especially, Don't use or contain lead (Pb) and cadmium (Cd) in ink.

INK REQUIREMENT FOR EU

(1) The amount of MOAH/MOSH must be less than 0.1% of the weight of the INK used.
*MOAH(Mineral Oil Aromatic Hydrocarbons) : Consisting of 1 to 7 aromatic cycles
*MOSH(Mineral Oil Saturated Hydrocarbons) : Consisting of 16 to 35 carbon atoms
(2) From 01 January 2025 : Ban on the use of MOAH in INK up to a limit of one part per million(1ppm) for compounds of 3 to 7 aromatic cycles

3. History

Rev. Number	Date	Description	ECO Number	Owner	
REV07					
REV06					
REV05					
REV04					
REV03					
REV02					
REV01					
REV00	04/30/2024	-	-	Checked :	Eunhye Jeong
				Approved :	Jongok Kim

LG

43UT80*
50UT80*
55UT80*
65UT80*
70UT80*
75UT80*
86UT80*

MFL72097717240 5REV00

Quick Start Guide





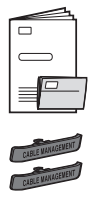



www.lg.com

Printed in India

Images and Accessory parts shown in manual may vary depending on model.

Unpacking

Check your product box for the following items. If there are any missing accessories, contact the local dealer where you purchased your product.
The illustrations in this manual may differ from the actual product and item.

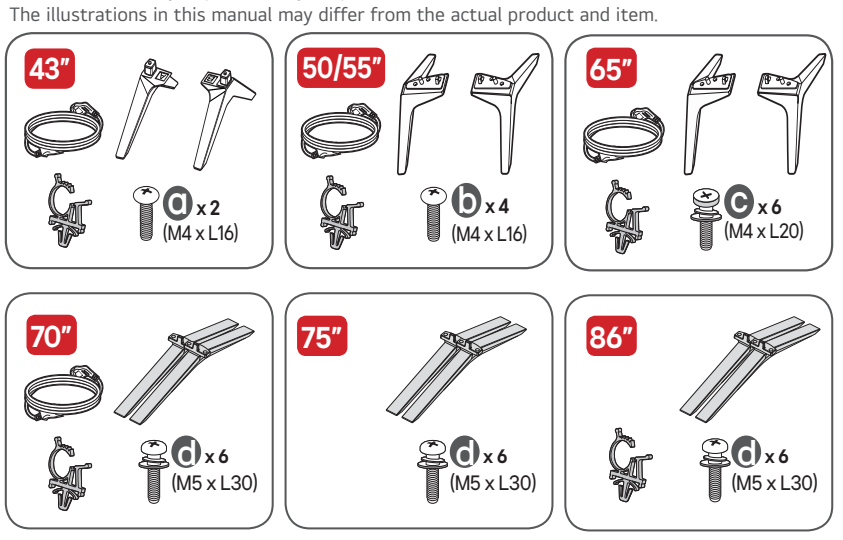

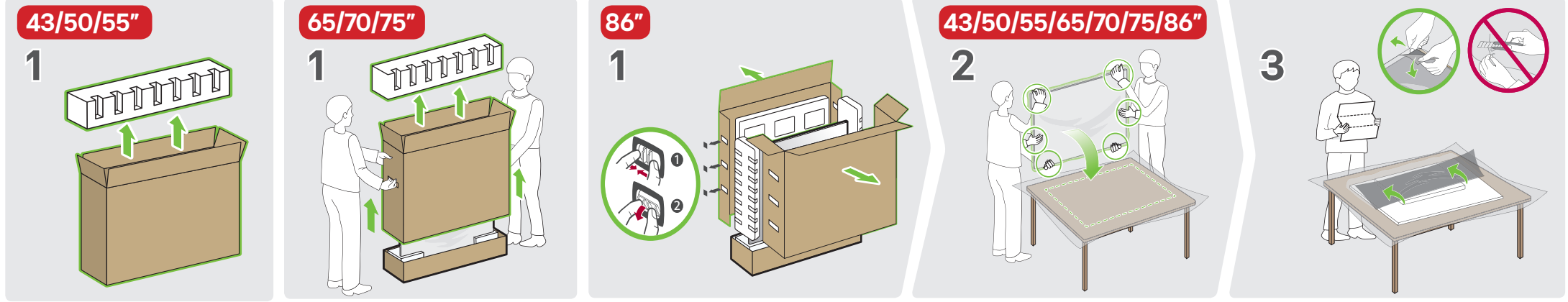

⚠CAUTION
Image shown may differ from your TV
When attaching the stand to the TV set, place the screen facing down on a cushioned table or flat surface to protect the screen from scratches.

Base stand installation video link

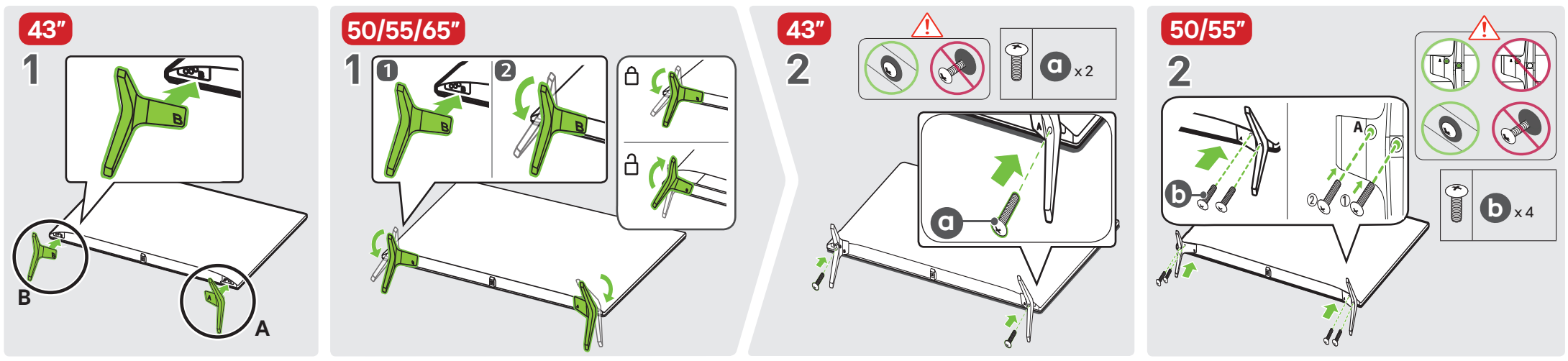

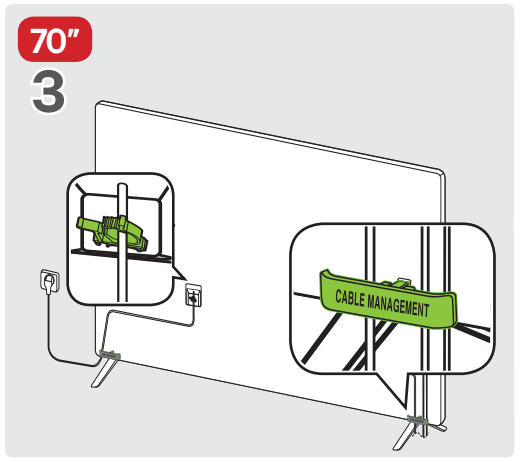

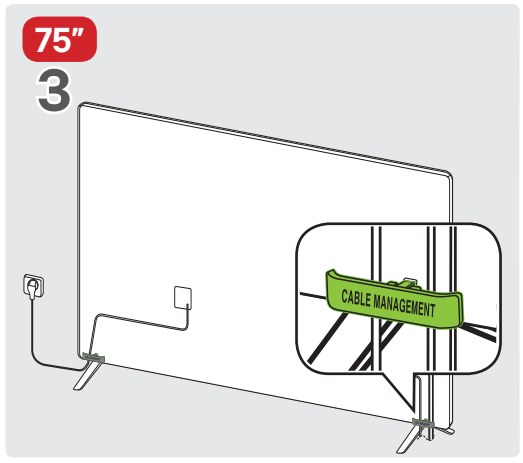

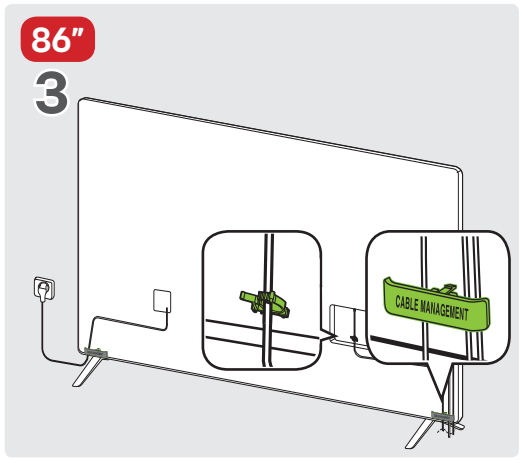

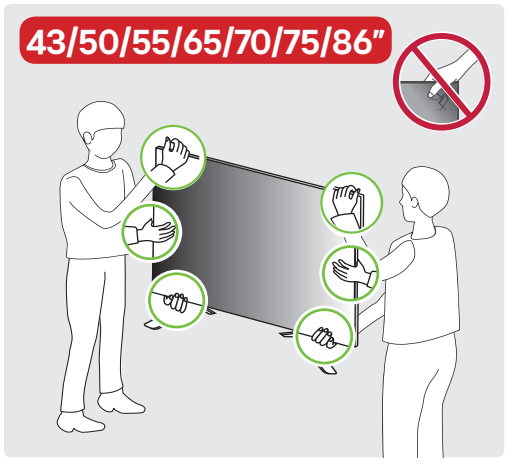

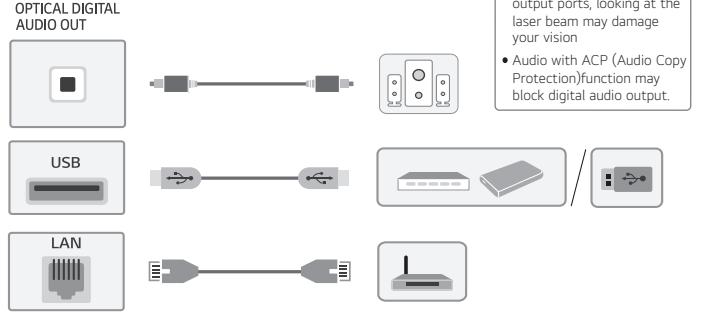

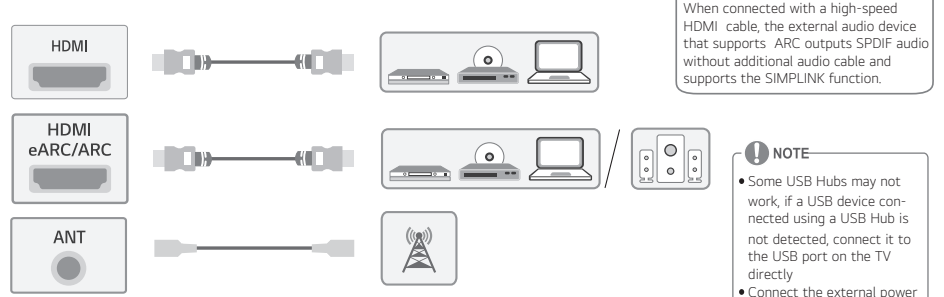



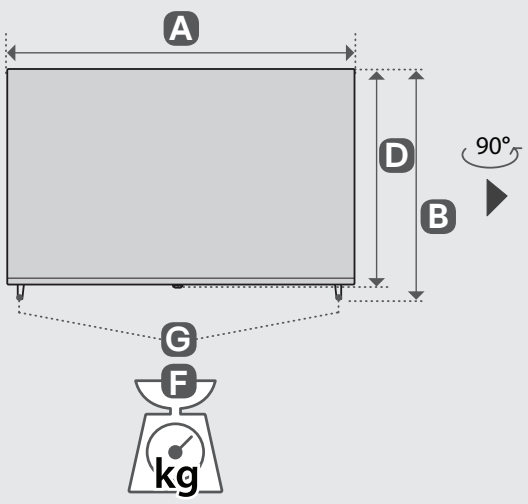

mm (inches)
kg (lbs)

	A	B	C	D	E	F	F-G	
43UT80*	967 mm (38.0) inches	621 mm (24.4) inches	216 mm (8.5) inches	564 mm (22.2) inches	57.1 mm (2.2) inches	8.9 kg (19.6) lbs	8.8 kg (19.4) lbs	115 W
50UT80*	1121 mm (44.1) inches	713 mm (28.0) inches	231 mm (9.0) inches	651 mm (25.6) inches	57.1 mm (2.2) inches	11.9 kg (26.2) lbs	11.7 kg (25.7) lbs	135 W
55UT80*	1235 mm (48.6) inches	776 mm (30.5) inches	231 mm (9.0) inches	715 mm (28.1) inches	57.5 mm (2.2) inches	14.2 kg (31.3) lbs	14.0 kg (30.8) lbs	150 W
65UT80*	1454 mm (57.2) inches	906 mm (35.6) inches	269 mm (10.5) inches	838 mm (32.9) inches	57.7 mm (2.2) inches	21.7 kg (47.8) lbs	21.4 kg (47.1) lbs	190 W
70UT80*	1562 mm (61.4) inches	972 mm (38.2) inches	361 mm (14.2) inches	907 mm (35.7) inches	59.9 mm (2.3) inches	28.1 kg (61.9) lbs	27.7 kg (61.0) lbs	205 W
75UT80*	1678 mm (66.0) inches	1027 mm (40.4) inches	361 mm (14.2) inches	964 mm (37.9) inches	59.9 mm (2.3) inches	31.8 kg (70.1) lbs	31.4 kg (69.2) lbs	230 W
86UT80*	1927 mm (75.8) inches	1167 mm (45.9) inches	362 mm (14.2) inches	1104 mm (43.4) inches	59.9 mm (2.3) inches	45.9 kg (101.1) lbs	45.2 kg (99.6) lbs	305 W

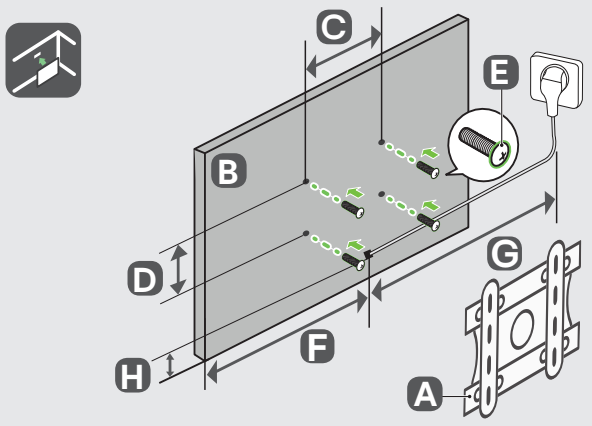

mm (inches)

A	B	C x D	E	F	G	H
Wallmount Bracket	43UT80*	200 x 200 mm (7.8 x 7.8) inches	M6	306 mm (12.0) inches	≧1.5 m (59.0) inches	214 mm (8.4) inches
	50UT80*			384 mm (15.1) inches		254 mm (10.0) inches
	55UT80*	300 x 300 mm (11.8 x 11.8) inches		371 mm (14.6) inches		230 mm (9.0) inches
	65UT80*	300 x 300 mm (11.8 x 11.8) inches		480 mm (18.8) inches		240 mm (9.4) inches
	70UT80*	400 x 400 mm (15.7 x 15.7) inches		485 mm (19.0) inches		275 mm (10.8) inches
	75UT80*			559 mm (22.0) inches		212 mm (8.3) inches
	86UT80*	600 x 400 mm (23.6 x 15.7) inches	M8	599 mm (23.5) inches		215 mm (8.4) inches

