ENGLISH

www.lg.com

Copyright © 2022 LG Electronics Inc.
All Rights Reserved.

Stand

OWNER'S MANUAL

Please read this manual carefully before operating your set and retain it for future reference.

SQ-C2DC42
SQ-C2DU42
SR-C3DC42
SR-C3DU42

MFL71872350230 3REV01

* Image shown may differ from your product.

Safety instructions

This symbol is intended to alert the user to the presence of important operating and maintenance (servicing) instructions in the literature accompanying the appliance.

Please read these safety precautions carefully before using the product.

- When lifting or moving the product, at least two people are required due to the heavy weight of the product.
  - The product may fall down, causing a malfunction or injury.
- Do not let children hang on or climb onto the product.
  - The product may fall down, causing an injury or even death.
- Do not install the product in a place which is unstable or vibrating or a place where the product is not completely supported such as a shaky shelf or a tilted place.
  - The product may fall down or overturn, causing an injury or malfunction.
- Put the product on a flat and firm floor.
- When moving or handling a product assembled with the Stand, be cautious about damaging the exterior of the product.
- When there is a stain or fingerprint left on the surface, wipe it off gently.
  - When removing a stain, do not use excessive force. Wiping with excessive force may cause scratches or discoloration on the product.

Assembling and Preparing

Accessories

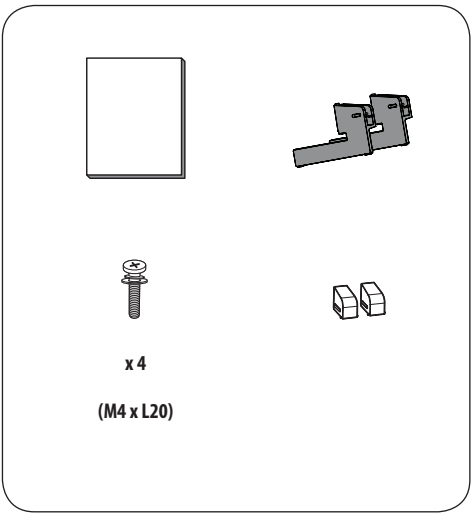

How to Assemble the Stand

- When assembling the stand, put the product on a table or a flat floor with its screen facing downward. Here, first put a soft and fluffy cloth on the place, and then put the product on top of it to prevent the screen from being damaged.
- When assembling the stand, ensure that all of the provided screws are attached. If the screws are not fully tightened, the product may tilt or tip over, resulting in damage. Tightening the screws with excessive force may cause them to come off due to abrasion of the screw joint.
- When assembling the product, do not use foreign substances (oil, lubricant, etc.) on the screws.
  - It may cause damage to the product.
- Before installing a wall mount support, disassemble the Stand by conducting the method to assemble the stand in a reverse order.

1

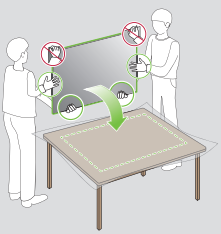

2

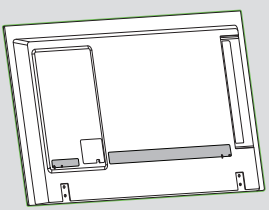

3

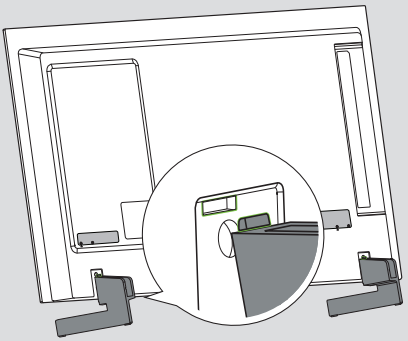

4

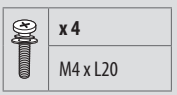

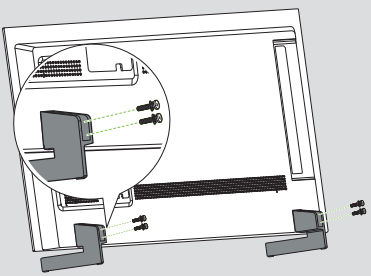

5

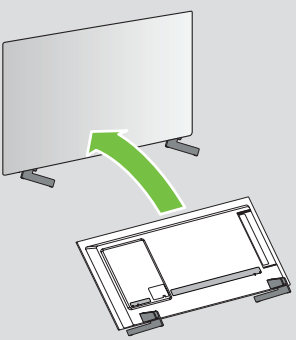

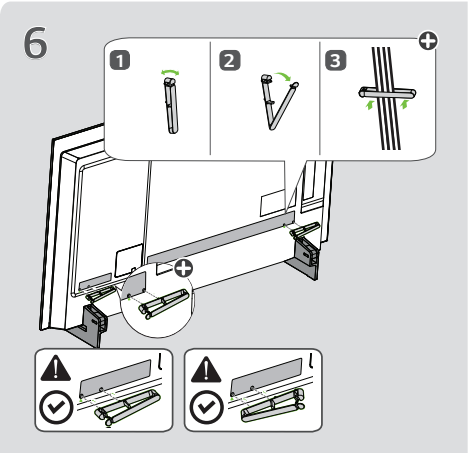
6
1
2
3

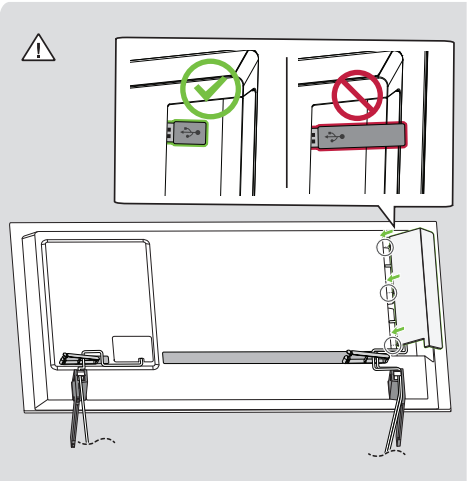

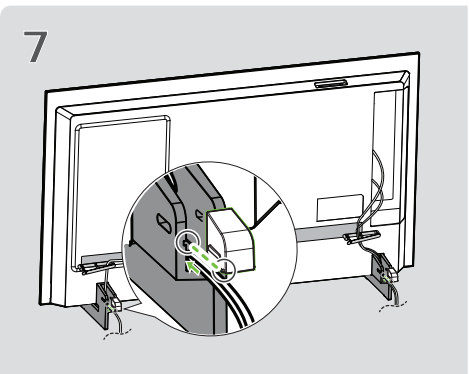
7

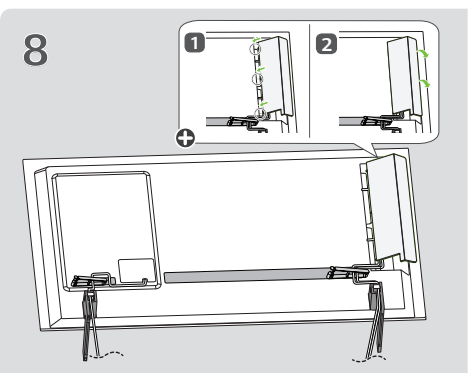
8
1
2

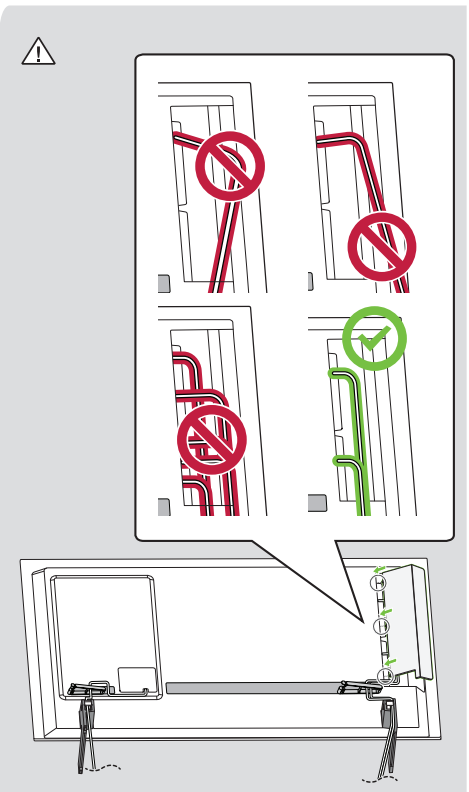

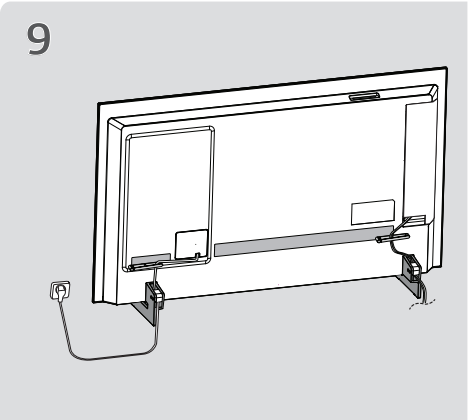

: The cable cover and cable holder are provided as TV accessories. (Depending on model)

Mounting on a Table

1 Lift and tilt the TV into its upright position on a table.

- Leave a 10 cm (minimum) space from the wall for proper ventilation.

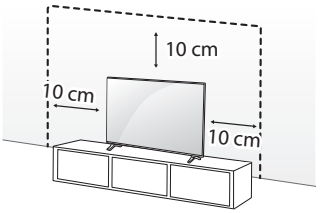

2 Connect the power cord to a wall outlet.

- Do not apply foreign substances (oils, lubricants, etc.) to the screw parts when assembling the product. (Doing so may damage the product.)
- If you install the TV on a stand, you need to take actions to prevent the product from overturning. Otherwise, the product may fall over, which may cause injury.
- Do not use any unapproved items to ensure the safety and product life span.
- Any damage or injuries caused by using unapproved items are not covered by the manufacturer's warranty.
- Make sure that the screws are inserted correctly and fastened securely. (If they are not fastened securely enough, the TV may tilt forward after being installed.) Do not use too much force and over tighten the screws; otherwise screw may be damaged and not tighten correctly.
- Only use the authorized stand and wall mounting bracket made specifically for LG products.
  - Pursuant to Consumer Protection Law, LG Electronics will not be held responsible for any product malfunction, material damage or injury caused by using products not authorized by LG Electronics.

Securing the TV to a Wall

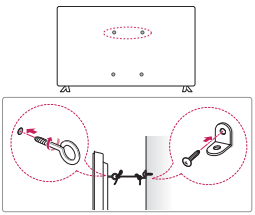

1 Insert and tighten the eye-bolts, or TV brackets and bolts on the back of the TV.
   - If there are bolts inserted at the eye-bolts position, remove the bolts first.

2 Mount the wall brackets with the bolts to the wall.
Match the location of the wall bracket and the eye-bolts on the rear of the TV.

3 Connect the eye-bolts and wall brackets tightly with a sturdy rope.
Make sure to keep the rope horizontal with the flat surface.

- Use a platform or cabinet that is strong and large enough to support the TV securely.
- Brackets, bolts and ropes are not provided. You can obtain additional accessories from your local dealer.

Specifications

Model Name	Width x Depth x Height (mm)	Weight (kg)
SQ-C2DC42 SQ-C2DU42 SR-C3DC42 SR-C3DU42	27 X 170 X 98	0.3

The model and serial number of the product are located on the back and on one side of the product. Record them below in case you ever need service.

Model _____

Serial No. _____