OWNER'S MANUAL

DVD Mini Hi-Fi Audio

Please read this manual carefully before operating your set and retain it for future reference.

MODEL

ON2D

MFL71726902
2004_Rev01

www.lg.com

Copyright © 2020 LG Electronics Inc. All Rights Reserved.

Safety Information

CAUTION

RISK OF ELECTRIC SHOCK DO NOT OPEN

CAUTION: TO REDUCE THE RISK OF ELECTRIC SHOCK DO NOT REMOVE COVER (OR BACK) NO USER-SERVICEABLE PARTS INSIDE REFER SERVICING TO QUALIFIED SERVICE PERSONNEL.

This lightning flash with arrowhead symbol within an equilateral triangle is intended to alert the user to the presence of uninsulated dangerous voltage within the product's enclosure that may be of sufficient magnitude to constitute a risk of electric shock to persons.

The exclamation point within an equilateral triangle is intended to alert the user to the presence of important operating and maintenance (servicing) instructions in the literature accompanying the product.

WARNING: TO PREVENT FIRE OR ELECTRIC SHOCK HAZARD, DO NOT EXPOSE THIS PRODUCT TO RAIN OR MOISTURE.

CAUTION: The apparatus should not be exposed to water (dripping or splashing) and no objects filled with liquids, such as vases, should be placed on the apparatus.

WARNING: Do not install this equipment in a confined space such as a book case or similar unit.

CAUTION: Do not use high voltage products around this product. (ex. Electrical swatter) This product may malfunction due to electrical shock.

CAUTION: This product employs a Laser System. To ensure proper use of this product, please read this owner's manual carefully and retain it for future reference. Shall the unit require maintenance, contact an authorized service center.
Use of controls, adjustments or the performance of procedures other than those specified herein may result in hazardous radiation exposure. To prevent direct exposure to laser beam, do not try to open the enclosure.

CAUTION: Do not block any ventilation openings. Install in accordance with the manufacturer's instructions.
Slots and openings in the cabinet are provided for ventilation and to ensure reliable operation of the product and to protect it from over heating. The openings should never be blocked by placing the product on a bed, sofa, rug or other similar surface. This product should not be placed in a built-in installation such as a bookcase or rack unless proper ventilation is provided or the manufacturer's instruction has been adhered to.

NOTICE: For safety marking information including product identification and supply ratings, please refer to the main label on the bottom or the other surface of the product.

CAUTION concerning the Power Cord

The Power Plug is the disconnecting device. In case of an emergency, the Power Plug must remain readily accessible.

Check the specification page of this owner's manual to be certain of the current requirements.

Do not overload wall outlets. Overloaded wall outlets, loose or damaged wall outlets, extension cords, frayed power cords, or damaged or cracked wire insulation are dangerous. Any of these conditions could result in electric shock or fire. Periodically examine the cord of your device, and if its appearance indicates damage or deterioration, unplug it, discontinue use of the device, and have the cord replaced with an exact replacement part by an authorized service center. Protect the power cord from physical or mechanical abuse, such as being twisted, kinked, pinched, closed in a door, or walked upon. Pay particular attention to plugs, wall outlets, and the point where the cord exits the device.

CAUTION: Be careful to make sure children do not put their hands or any objects into the *speaker duct.

* speaker duct: A hole for plentiful bass sound on speaker cabinet (enclosure)

CAUTION: No naked flame sources, such as lighted candles, should be placed on the apparatus.

Symbols

~	Refers to alternating current (AC).
⎓	Refers to direct current (DC).
⧈	Refers to class II equipment.
⏻	Refers to stand-by.
I	Refers to "ON" (power).
ϟ	Refers to dangerous voltage.

Table of Contents

1 Getting Started

2 Safety Information
6 Unique Features
7 Introduction
7 – Playable Discs
7 – About the "⊘" Symbol Display
7 – Symbols Used in this Manual
7 – Regional Codes
8 Playable file Requirement
8 – Music file requirement
8 – Photo file requirement
9 – Video file requirement
9 – Compatible USB Devices
9 – USB device requirement
10 Remote control
12 Top panel
13 Front panel / Rear panel

2 Connecting

14 Connections to Your TV
14 – HDMI Out connection
15 – Resolution Setting
16 Optional Equipment Connection
16 – AUX IN Connection
17 – USB Connection

3 System Setting

18 Adjust the setup settings
18 – OSD Initial language settings - Optional
18 – To display and exit the Setup menu
19 – Language
19 – Display
20 – Audio
21 – Lock (Parental Control)

4 Operating

22 Using the Home Menu
23 Basic Operations on Disc
24 Advanced Operations on Disc
24 – Displaying Disc Information on-screen
24 – To display the DVD Menu
24 – To display the DVD title
24 – 1.5 times speed playback
24 – Screen Saver
25 – Starting play from selected time
25 – Resume playback
25 – Changing subtitle code page
26 – Marked Playback
27 – Viewing a PHOTO file
28 USB Operations
30 Using BLUETOOTH® wireless technology
30 – Listening to music stored on the Bluetooth devices
32 Radio Operations
32 – Listening to the radio
32 – Presetting the Radio Stations
32 – Deleting all the saved stations
33 Sound adjustment
33 – Setting the sound mode
33 – Adjusting BASS level
33 Other Operations
33 – Turn off the sound temporarily
33 – Resume stop
34 – Last Scene Memory
34 – Power Resume - Optional
34 – System Select - Optional
34 – Using Microphone
34 – Adjusting MIC ECHO level
35 – Sleep Timer Setting
35 – Dimmer

5 Troubleshooting

36 Troubleshooting
36 – General

6 Appendix

38 Area Code List
39 Language code List
40 Trademarks and Licenses
41 Maintenance
41 – Notes on Discs
41 – Handling the Unit
42 Specifications

Unique Features

BLUETOOTH®

Listens to music stored on your **Bluetooth** device.

Full HD up-scaling

Views Full HD picture quality with simple setup.

Introduction

Playable Discs

This unit plays DVD±R/RW and CD-R/RW that contains audio titles, MP3, WMA and/or JPEG files. Some DVD±RW/DVD±R or CD-RW/CD-R cannot be played on this unit due to the recording quality or physical condition of the disc, or the characteristics of the recording device and authoring software.

DVD VIDEO	DVD-VIDEO (8 cm/12 cm disc) Discs such as movies that can be purchased or rented.
	DVD±R (8 cm/12 cm disc) Video mode and finalized only.
	DVD-RW (8 cm/12 cm disc) Video mode and finalized only.
	DVD+R: Video mode only Supports the double layer disc also.
	DVD+RW (8 cm/12 cm disc) Video mode and finalized only.
COMPACT disc DIGITAL AUDIO	Audio CD: Music CDs or CD-R/CD-RW in music CD format that can be purchased.

About the "⊘" Symbol Display

"⊘" may appear on your TV display during operation and indicates that the function explained in this owner's manual is not available on that specific media.

Symbols Used in this Manual

DVD	DVD-Video, DVD±R/RW in Video mode or VR mode and finalized
ACD	Audio CDs
MOVIE	Video files contained in the Disc
MUSIC	Audio files contained in the Disc
PHOTO	Photo files contained in the Disc

Note

Indicates special notes and operating features.

Caution

Indicates cautions for preventing possible damages from abuse.

Regional Codes

This unit has a regional code printed on the rear of the unit. This unit can play only DVD discs labeled same as the rear of the unit or "ALL"

- Most DVD discs have a globe with one or more numbers in it clearly visible on the cover. This number must match your unit's regional code or the disc cannot play.
- If you try to play a DVD with a different regional code from your unit, the message "Check Regional Code" appears on the TV screen.

Playable file Requirement

Music file requirement

Disc (DVD/CD)

MP3/WMA file compatibility with this unit is limited as follows.

- Sampling frequency: within 32 to 48 kHz (MP3), within 32 to 48 kHz (WMA)
- Bit rate: within 32 to 320 kbps (MP3), 40 to 192 kbps (WMA)
- Support Version: v2, v7, v8, v9
- Maximum files: 999
- Maximum folders: 99
- File extensions: ".mp3"/ ".wma"
- Certain MP3/WMA files may not be played depending on the type or format of the file.
- CD-ROM file format: ISO 9660/ JOLIET
- We recommend that you use Easy-CD Creator, which creates an ISO 9660 file system.
- A protected file by DRM (Digital rights management) cannot be played on the unit.
- The DTS disc is not supported.

You have to set the disc format option to [Mastered] in order to make the discs compatible with the LG players when formatting rewritable discs. When setting the option to Live File System, you cannot use it on LG players.

(Mastered/Live File System: Disc format system for Windows Vista)

USB

MP3 file compatibility with this unit is limited as follows.

- Sampling frequency: within 32 to 48 kHz
- Bit rate: within 32 to 320 kbps
- Maximum files: 999
- Maximum folders: 99
- File extensions: ".mp3"
- Certain MP3 files may not be played depending on the type or format of the file.

Photo file requirement

Photo file compatibility with this unit is limited as follows:

- Max pixel in width: 2760 x 2048 pixel
- Maximum files: Under 999
- Some discs may not operate due to a different recording format or the condition of disc.
- File extensions: ".jpg"
- CD-ROM file format: ISO9660/ JOLIET

Video file requirement

Video file compatibility with this unit is limited as follows:

- Available resolution: within 720 x 576 (W x H) pixels.
- The file name of the Video subtitle should be entered within 45 characters.
- If there is impossible code to express in the Video file, it may be displayed as " _ " mark on the display.
- Frame rate: less than 30 fps.
- If the video and audio structure of recorded files is not interleaved, either video or audio is outputted.
- Playable Video file: ".avi", ".mpg", ".mpeg"
- Playable Subtitle format: SubRip (*.srt/ *.txt), SAMI (*.smi), SubStation Alpha (*.ssa/ *.txt), MicroDVD (*.sub/ *.txt), SubViewer 2.0 (*.sub/ *.txt), Vobsub (*.sub)
- Playable Codec format: "Xvid", "MPEG-1", "MPEG-2"
- Playable Audio format: "AC3", "PCM", "MP3", "WMA",
- Sampling frequency: within 32 to 48 kHz (MP3), within 32 to 48 kHz (WMA)
- Bit rate: within 32 to 320 kbps (MP3), 40 to 192 kbps (WMA)
- For Discs formatted in Live file system, you can not it on this unit.
- If the name of movie file is different from that of the subtitle file, during playback of a Video file, subtitle may not be display.
- If you play a Xvid file differ from Xvid spec, it may not operate normally.
- If you play GMC video file which is more than 1-warp point, video playback screen will not smooth.

Compatible USB Devices

- MP3 Player: Flash type MP3 player.
- USB Flash Drive:
  Devices that support USB2.0 or USB1.1.
- The USB function of this unit does not support all USB devices.

USB device requirement

- Devices which require additional program installation when you have connected it to a computer, are not supported.
- Do not extract the USB device while in operation.
- For a large capacity USB, it may take longer than a few minute to be searched.
- To prevent data loss, back up all data.
- If you use a USB extension cable or USB hub, the USB device is not recognized.
- Using NTFS file system is not supported. (Only FAT(16/ 32) file system is supported.)
- This unit recognizes up to 999 files.
- External HDD, Card readers, Locked devices, or hard type USB devices are not supported.
- USB port of the unit cannot be connected to PC. The unit cannot be used as a storage device.
- Some USB may not work with this unit.

Remote control

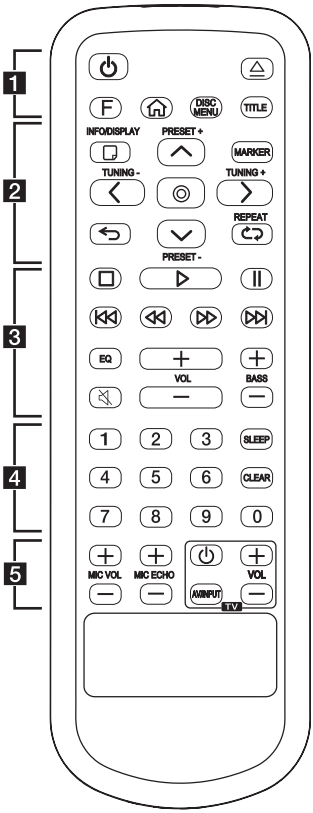

Replacement of battery

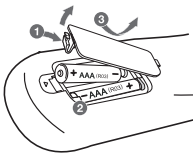

Remove the battery cover on the rear of the remote control, and insert the battery with ⊕ and ⊖ matched correctly.

Risk of fire or explosion if the battery is replaced by an incorrect type.

1

⏻ (Standby)**:** Turns the power on or off.

⏏ (Open/Close)**:** Opens and closes the disc tray.

F (Function)**:** Selects the function and input source.

Input source / Function	Display
Disc	DVD.CD
USB	USB USB
AUX input	AUX
Bluetooth	BT
Radio	FM FM

⌂ (Home): Displays the [Home Menu] on a DVD.CD function.

DISC MENU: Accesses the menu on a DVD disc.

TITLE: If the current DVD title has a menu, the title menu appears on the screen. Otherwise, the disc menu may not appear.

2

INFO/DISPLAY: Accesses On-Screen Display.

MARKER: Marks play list. (Page 26)

∧ / ∨ / < / > (up/ down/ left/ right): Used to navigate on-screen displays.

PRESET+/-: Chooses a preset number for a radio station. (Page 32)

◎ (Select)

- Acknowledges menu selection.
- Presetting the radio stations.

TUNING +/-: Tunes in the desired radio station.

⮌ (Close): Moves backwards in the menu or exits the setup menu.

REPEAT: Listens to your files/tracks/chapters repeatedly or randomly.

3

□ (Stop): Stops playback.

▷ (Play): Starts playback.

II (Pause): Pauses playback.

⏮/⏭ (Skip): Skips backward or forward.

◁◁/▷▷ (Scan): Scans for a section within a track/file/chapter.

EQ: Chooses sound impressions.

VOL (Volume) **+/-**: Adjusts speaker volume.

BASS +/-: Adjusts bass level.

🔇 (Mute)**:** Mutes the sound.

4

0-9 numerical buttons: Selects numbered options in a menu.

SLEEP: Sets the system to turn off automatically at a specified time. (Dimmer: The display window will be darkened by half.)

CLEAR

- Removes a number when setting the password.
- Deletes all the saved stations.

5

MIC VOL (Microphone Volume) **-/+**: Adjusts microphone volume.

MIC (Microphone) **ECHO -/+**: Adjusts microphone echo level.

TV Control buttons: Controls the TV. (LG TV only)

- You can control the sound level, input source, and power switching of LG TVs as well.
  Hold ⏻ (TV) and press VOL (+/-) button repeatedly until the TV turns on or off.

Top panel

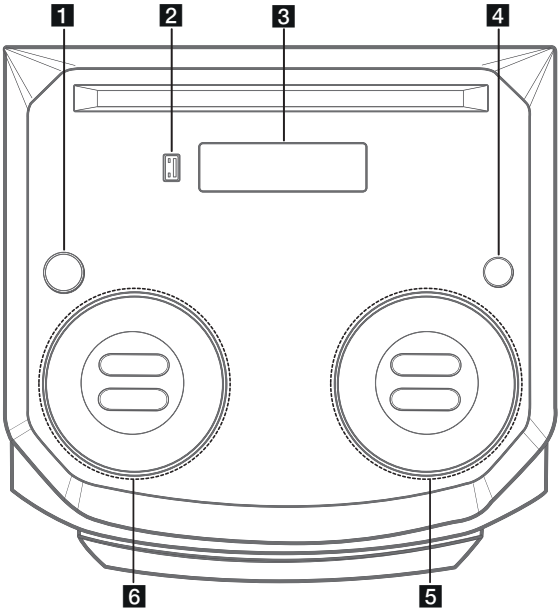

1 ⏻ (Standby)
Turns the power on or off.

2 USB Port
You can play MP3 files by connecting the USB device.

3 Display window

4 F (Function)
Selects the function and input source.

Input source / Function	Display
Disc	DVD.CD
USB	USB USB
AUX input	AUX
Bluetooth	BT
Radio	FM FM

5 ⏏ (Open/Close)
Opens and closes the disc tray.

⏮/⏭ (Skip/Scan)

- Skips backward or forward.
- Scans for a section within a track/file/chapter.
- Selects the radio stations.

□ (Stop)
Stops playback.

VOL (Volume) **-/+**
Adjusts speaker volume.

⏯ (Play/Pause)
Starts or pauses playback.

6 **MIC VOL** (Microphone volume) **-/+**
Adjust microphone volume.

MIC (Microphone) **ECHO -/+**
Adjusts microphone echo level.

BASS -/+
Adjusts bass level.

EQ
Chooses sound impressions.

Front panel / Rear panel

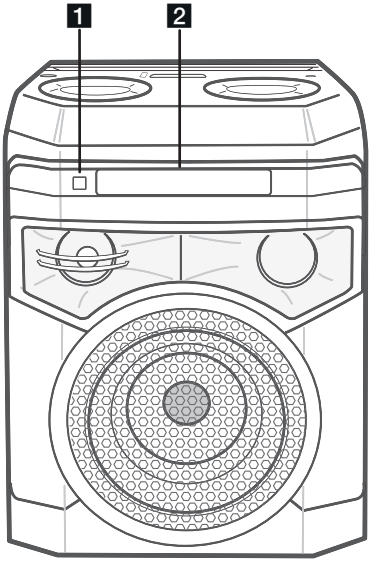

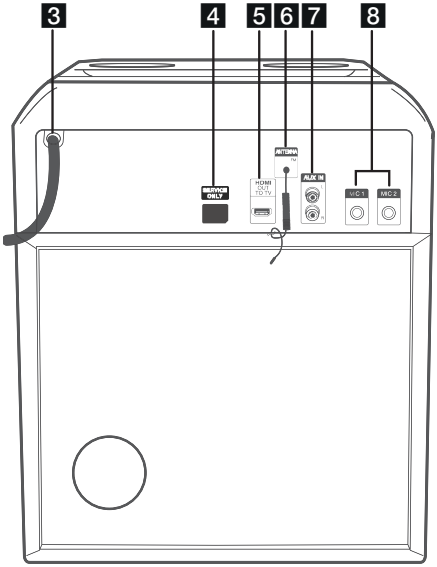

1 Remote sensor
2 Disc tray

3 Power cord
4 **SERVICE ONLY**: S/W download connector.
5 **HDMI OUT TO TV**: Connect to TV.
6 **ANTENNA** FM
7 **AUX IN** (L/R): Connect an auxiliary device.
8 **MIC** (Microphone) **1/2**: Connect a microphone.

Connections to Your TV

HDMI Out connection

If you have a HDMI TV or monitor, you can connect it to this unit using a HDMI cable (Type A, High Speed HDMI™ Cable).
Connect the HDMI OUT jack on the unit to the HDMI IN jack on a HDMI compatible TV or monitor.
Set the TV's source to HDMI (refer to TV's Owner's manual).

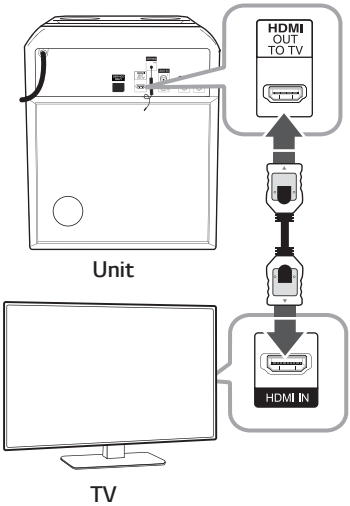

Note

- You can fully enjoy digital audio and video signals together with this HDMI connection.
- When you use HDMI connection, you can change the resolution for the HDMI output. (Page 15)

Caution

- Changing the resolution when the connection has already been established may result in malfunctions. To solve the problem, turn off the unit and then turn it on again.
- When the HDMI connection with HDCP is not verified, TV screen is changed to black or green screen or the snow noise may occur on the screen. In this case, check the HDMI connection, or disconnect the HDMI cable.
- Make sure the unit is connected directly to the TV. Tune the TV to the correct video input channel.

Note

- If a connected HDMI device does not accept the audio output of the unit, the HDMI device's audio sound may be distorted or may not output.
- When you connect a HDMI or DVI compatible device make sure of the following:
  - Try switching off the HDMI/DVI device and this unit. Next, switch on the HDMI/DVI device and leave it for around 30 seconds, then switch on this unit.
  - The connected device's video input is set correctly for this unit.
  - The connected device is compatible with 720 x 480i (or 576i), 720 x 480p (or 576p), 1280 x 720p, 1920 x 1080i or 1920 x 1080p video input.
- Not all HDCP-compatible HDMI or DVI devices will work with this unit.
  - The picture will not be displayed properly with non-HDCP device.
  - This unit does not playback and TV screen is changed to black or green screen or the snow noise may occur on the screen.
- If there is noise or lines on the screen, please check the HDMI cable and use a higher version cable than High Speed HDMI™ Cable.
- The HDMI sounds output only DVD.CD function.

Resolution Setting

The unit provides several output resolutions for HDMI.
You can change the resolution using [Setup] menu.

1. Press ⌂ on the remote control.
2. Use ∧ / ∨ / < / > on the remote control to select the [Setup] and press ◎ on the remote control.
   The [Setup] menu appears.

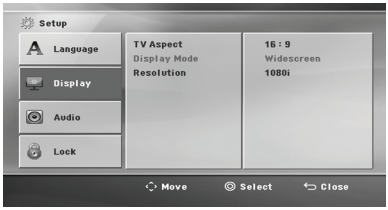

3. Use ∧ / ∨ on the remote control to select [Display] option then press > on the remote control to move to the second level.
4. Use ∧ / ∨ on the remote control to select the [Resolution] option then press > on the remote control to move to the third level.
5. Use ∧ / ∨ on the remote control to select the desired resolution then press ◎ on the remote control to confirm your selection.

Note

- If your TV does not accept the resolution you have set on the unit, you can set resolution to 480p (or 576p) as follows: Press ☐ for more than 5 seconds.
- [Home Menu] appears only on DVD.CD function.

Optional Equipment Connection

AUX IN Connection

Connect an output of auxiliary device (Camcorder, TV, Player, etc) to the **AUX IN** (L/R) connector.

If your device has only one output for audio (mono), connect it to the left audio jack on the unit.

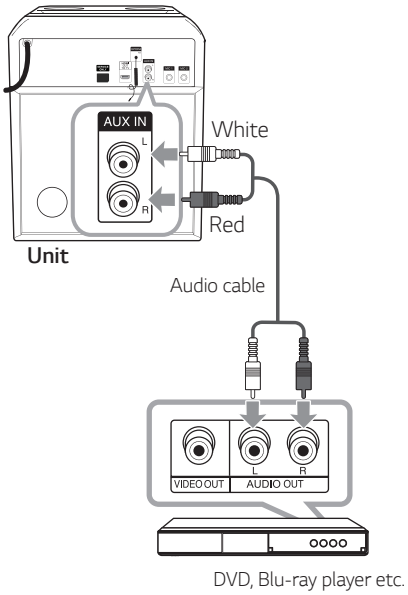

Listening to music from your external device

The unit can be used to play the music from many types of external device.

1. Connect the external device to the **AUX IN** (L/R) connector of the unit.
2. Turn the power on by pressing ⏻.
3. Press **F** to select AUX.
4. Turn on the external device and start it playing.

USB Connection

Connect a USB device (or MP3 player, etc.) to the USB ports on the unit.

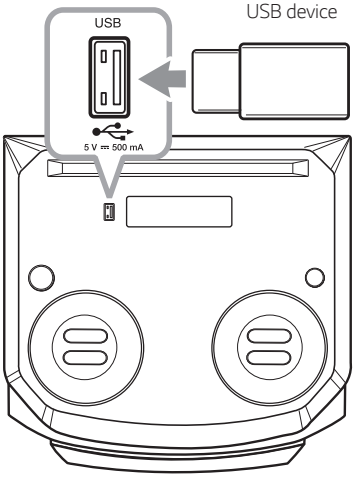

Note

Removing the USB device from the unit:

1. Choose a different function/mode or press ☐ once.
2. Remove the USB device from the unit.

Adjust the setup settings

By using the Setup menu, you can make various adjustments to items such as picture and sound.

You can also set a language for the subtitles and the Setup menu, among other things. For details on each Setup menu item, see pages 18 to 21.

OSD Initial language settings - Optional

During the first use of this unit, the initial language setup menu appears on your TV screen. You must complete initial language selection before using the unit. English will be selected as the initial language.

1. Press ⏻ to turn the unit on. The language setup menu will appear on the screen.
2. Use ∧ / ∨ / < / > on the remote control to select a language then press ◎ on the remote control.
   The confirm menu will appear.

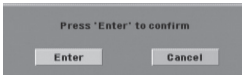

3. Use < / > on the remote control to select the [Enter] then ◎ on the remote control to finish the language setup.

To display and exit the Setup menu

1. Press ⌂ on the remote control.
   Displays the [Home Menu].

2. Select an [Setup] by using < / > on the remote control.
3. Press ◎ on the remote control.
   Displays the [Setup].
4. Press ⌂ on the remote control or ↩ on the remote control to exit in the [Setup] Menu.

About help menu for Setup

Menu	Buttons	Operation
∧ / ∨ Move	∧ / ∨	Moving to another menu.
< Move	<	Moving to previous level.
> Move	>	Moving to next level or selecting menu.
↩ Close	↩	To exit the [Setup] menu.
◎ Select	◎	To confirm menu.

Note

[Home Menu] appears only on DVD.CD function.

Language

Menu Language

Select a language for the Setup menu and on screen display.

Disc Audio / Disc Subtitle / Disc Menu

Select the language you prefer for the audio track (disc audio), subtitles, and the disc menu.

[Original]

Refers to the original language in which the disc was recorded.

[Other]

To select another language, press numeric buttons and then ◎ on the remote control to enter the corresponding 4-digit number according to the language code list on the page 39.
If you enter the wrong language code, press **CLEAR** on the remote control.

[Off (for Disc Subtitle)]

Turns off Subtitle.

Display

TV Aspect

Select the screen aspect to use based on the shape of your TV screen.

[4:3]

Select when a standard 4:3 TV is connected.

[16:9]

Select when a 16:9 wide TV is connected.

Display Mode

The Display Mode setting works only when the TV Aspect mode is set to 4:3.

[Letterbox]

Displays a wide picture with bands on the upper and lower portions of the screen.

[Panscan]

Automatically displays the wide picture on the entire screen and cuts off the portions that do not fit. (If the disc/file is not compatible with Pan Scan, the picture is displayed at Letterbox ratio.)

Resolution

Sets the output resolution of HDMI video signal. Refer to "Resolution Setting" for details about the resolution (page 15).

[Auto]

If the HDMI jack is connected to TVs providing display information (EDID), automatically selects the resolution best suited to the connected TV.

[1080p]

Outputs 1080 lines of progressive video.

[1080i]

Outputs 1080 lines of interlaced video.

[720p]

Outputs 720 lines of progressive video.

[480p (or 576p)]

Outputs 480 (or 576) lines of progressive video.

[480i (or 576i)]

Outputs 480 (or 576) lines of interlaced video.

Audio

DRC (Dynamic Range Control)

Make the sound clear when the volume is turned down and prevent a sudden sound increase (Dolby Digital only). Set to [On] for this effect.

HD AV Sync

Sometimes Digital TV encounters a delay between picture and sound. If this happens you can compensate by setting a delay on the sound so that it effectively 'waits' for the picture to arrive: this is called HD AV Sync. Use ∧ / ∨ on the remote control to scroll up and down through the delay amount, which you can set at anything between 0 and 300ms.

Lock (Parental Control)

Initial Setting the Area Code

When you use this unit for the first time, you have to set the Area Code.

1. Select the [Lock] menu and then press > on the remote control.
2. Press > on the remote control.
   To access the [Lock] options, you must input the password you have created.
   Input a password and press ◎ on the remote control. Enter it again and press ◎ on the remote control to verify.
   If you make a mistake before pressing ◎ on the remote control, press **CLEAR** on the remote control.
3. Select the first character using ∧ / ∨ on the remote control.
4. Press ◎ on the remote control and select the second character using ∧ / ∨ on the remote control.
5. Press ◎ on the remote control to confirm your Area code selection.

Rating

Blocks playback of rated DVDs based on their contents. Not all discs are rated.

1. Select [Rating] on the [Lock] menu then press > on the remote control.
2. Input a password and press ◎ on the remote control.
3. Select a rating from 1 to 8 using the ∧ / ∨ on the remote control.

[Rating 1-8]

Rating one (1) has the most restrictions and rating eight (8) is the least restrictive.

[Unlock]

If you select unlock, parental control is not active and the disc plays in full.

4. Press ◎ on the remote control to confirm your rating selection.

Password

You can enter or change password.

1. Select [Password] on the [Lock] menu and then press > on the remote control.
2. Press ◎ on the remote control.
3. Input a password and press ◎ on the remote control.
   To change the password, press ◎ on the remote control when the [Change] option is highlighted.
   Input a password and press ◎ on the remote control.
   Enter it again and press ◎ on the remote control to verify.
4. Press ⌂ on the remote control to exit the menu.

Note

If you forget your password, you can clear it using the following steps:

1. Select the [Setup] menu on the [Home Menu].
2. Input the 6-digit number "210499" and press ◎ on the remote control.
   The password is cleared.

Area Code

Enter the code of the area whose standards were used to rate the DVD video disc, based on the list on page 38.

1. Select [Area Code] on the [Lock] menu then press > on the remote control.
2. Input a password and press ◎ on the remote control.
3. Select the first character using ∧ / ∨ on the remote control.
4. Press ◎ on the remote control and select the second character using ∧ / ∨ on the remote control.
5. Press ◎ on the remote control to confirm your Area code selection.

Using the Home Menu

1. Press ⌂ on the remote control.
   Displays the [Home Menu].

2. Select an option by using < / > on the remote control.
3. Press ◎ on the remote control then selected option menu.

[Music] – Displays [MUSIC] menu.

[Movie] – Start video media's playback or displays the [MOVIE] menu.

[Photo] – Displays [PHOTO] menu.

[Setup] – Displays the [SETUP] menu.

Note

- [Home Menu] appears only on DVD.CD function.
- USB function is only available on music playback.

Basic Operations on Disc

1. Insert the disc by using the ⏏.
2. Press ⌂ on the remote control.
   Displays the [Home Menu].
3. Select an option by using < / > on the remote control.
4. Press ◎ on the remote control then selected option menu.

To	Do this
Stop	Press ☐.
Playback	Press ▷ on the remote control or ▷II on the unit.
Pause	Press II on the remote control or ▷II on the unit.
Frame-by-Frame playback	Press II on the remote control repeatedly to play title Frame-by-Frame. (DVD Movie title, Movie file only)
Skipping to the next/ previous chapter/ track/ file	During playback, press ⏮/⏭ to go to the next chapter/ track/ file or to return to the beginning of the current chapter/ track/ file. Press ⏮ twice briefly to step back to the previous chapter/ track/ file.
Locating a point quickly by playing a file in fast forward or fast reverse	During playback, press ◁◁/▷▷ on the remote control or press and hold ⏮/⏭ on the unit repeatedly to select the required scan speed. To return to normal speed, press ▷ on the remote control or ▷II on the unit.

To	Do this
Playing repeatedly or randomly	Press ⟲ **REPEAT** on the remote control repeatedly, and the current title, chapter or track will be played back repeatedly or randomly. - DVD: Chapter/ Title/ Off - Video(MOVIE): Title/ All/ Off - Audio CD/ MP3/ WMA: Track/ All/ Random/ Off
Slowing down the playing speed	In the pause mode, Press ◁◁/▷▷ on the remote control or press and hold ⏮/⏭ on the unit repeatedly to select the required speed. (DVD Movie title only)
	In the pause mode, press ▷▷ on the remote control or press and hold ⏭ on the unit repeatedlyl to select the required speed. (Movie file only)
Selecting a track/file directly	Press **0** to **9** numerical buttons on the remote control to go to the desired file or track directly.

Advanced Operations on Disc

Displaying Disc Information on-screen

You can display various information about the disc loaded on-screen.

1. Press INFO/DISPLAY on the remote control to show various playback information.
   The displayed items differ depending on the disc type or playing status.
2. You can select an item by pressing ∧ / ∨ on the remote control and change or select the setting by pressing < / > on the remote control.

Title – Current title number/ total number of titles.

Chapter – Current chapter number/ total number of chapters.

Time – Elapsed playing time.

Audio – Selected audio language or channel.

Subtitle – Selected subtitle.

Angle – Selected angle/ total number of angles.

Note

If any button is not pressed for a few seconds, the on-screen display disappears.

To display the DVD Menu

DVD

When you play a DVD which contains several menu, you can select the menu you want using the Menu.

1. Press **DISC MENU** on the remote control.
   The disc's menu appears.
2. Select the menu by using ∧ / ∨ / < / > on the remote control.
3. Press ◎ on the remote control to confirm.

To display the DVD title

DVD

When you play a DVD which contains several title, you can select the title you want using the Menu.

1. Press **TITLE** on the remote control.
   The disc's title appears.
2. Select the menu by pressing ∧ / ∨ / < / > on the remote control.
3. Press ◎ on the remote control to confirm.

1.5 times speed playback

DVD

The 1.5 speed allows you to watch the pictures and listen to the sound quicker than playing at a normal speed.

1. During playback, press ▷ on the remote control to play at 1.5 times speed.
   "▶X1.5" appears on the screen.
2. Press ▷ on the remote control again to exit.

Screen Saver

The screen saver appears when you leave the unit in Stop mode for about five minutes.

Starting play from selected time

DVD MOVIE

To start playing at any chosen time on the file or title.

1. Press INFO/DISPLAY on the remote control during playback.
2. Press ∧ / ∨ on the remote control to select the time clock icon and "--:--:--" appears.
3. Input the required start time in hours, minutes, and seconds from left to right.
   If you enter the wrong numbers, press **CLEAR** on the remote control to remove the numbers you entered.
   Then input the correct numbers.
   For example, to find a scene at 1 hour, 10 minutes, and 20 seconds, enter "11020" by using numerical buttons on the remote control.
4. Press ◎ on the remote control to confirm.
   Playback starts from the selected time.

Resume playback

DVD MOVIE MUSIC ACD

The unit records the point where you pressed the □ depending on the disc.
If "❚❚■ (Resume Stop)" appears on the screen briefly, press ▷ on the remote control or ▷❚ on the unit to resume playback
(from the scene point).

If you press □ twice or unload the disc, "■"(Complete Stop) appears on the screen.
The unit will clear the stopped point.

Note

- The resume point may be cleared when a button is pressed (for example; ⏻, ⏏, etc).
- This function may not work on some disc or title/track.

Changing subtitle code page

MOVIE

If the subtitle is not displayed properly, you can change the subtitle code page to view the subtitle file properly.

1. During playback, press INFO/DISPLAY on the remote control to display the On-Screen display.
2. Use ∧ / ∨ on the remote control to select the [Code Page] option.
3. Use < / > on the remote control to select desired code option.
4. Press ↩ on the remote control to exit the On-Screen display.

Marked Playback

MUSIC ACD

The mark function enables you to store your favourite files from any disc in the unit memory.

1. Select [Music] on the [Home Menu].

Returning to the upper folder. (MP3/ WMA only)

File information will be displayed according to the ID3 TAG information on the appropriate music file. (MP3 only)

Selecting all tracks/files.

Deselecting all tracks/files.

Moving to the previous or next file list.

2. Select a desired music on the [List] by using the ∧ / ∨ on the remote control then press **MARKER** on the remote control to appears the mark on the list.
3. Press ◎ on the remote control.
   Displays the play mode.
4. Select the play mode by using the ∧ / ∨ on the remote control and press ◎ on the remote control.

[Mark Play]

Marked playback.

[Current Play]

Normal playback.

Note

If you want to select all files on the list, select [Select All] and press ◎ on the remote control.

To delete a Marker

1. Use ∧ / ∨ on the remote control to select the track that you wish to erase from the marked file.
2. Press **MARKER** on the remote control.

To delete all Markers

Use ∧ / ∨ / < / > on the remote control to select [Deselect All] then press ◎ on the remote control in program edit mode.

Note

The markers are also cleared when the disc is removed, the unit is switched to power off or the function is switched to others.

Viewing a PHOTO file

PHOTO

This unit can play discs with photo files.

1. Select [Photo] on the [Home Menu] and press ◎ on the remote control

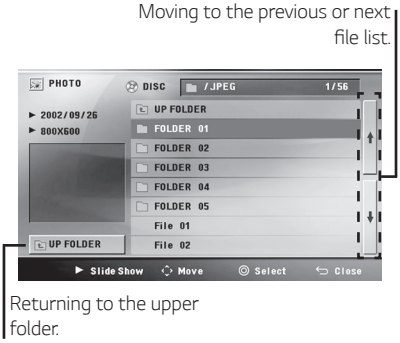

2. Press ∧ / ∨ on the remote control to select a folder, and then press ◎ on the remote control.
3. If you want to view a slide show, press ∧ / ∨ on the remote control to highlight a file and press ▷ on the remote control.

About help menu in the [Photo] menu

Menu	Buttons	Operation
▶ Slide Show	▷	Viewing a slide show.
∧ / ∨ / < / > Move	∧ / ∨ / < / >	Moving to another file or content.
◎ Select	◎	Viewing a particular file.
⮌ Close	⮌	Returning to the [Home Menu].

About help menu in the full screen

Menu	Buttons	Operation
☐ Menu	☐ INFO/ DISPLAY	Displaying the Option menu.
◀ / ▶ Prev./ Next	< / >	Moving to another file.
⮌ List	⮌	Returning to the [Photo] menu.

Options while viewing a photo

You can use various options during viewing a photo in full screen.

1. While viewing a photo in full screen, press ☐ **INFO/DISPLAY** on the remote control to display the option menu.
2. Select an option using ∧ / ∨ / < / > on the remote control.

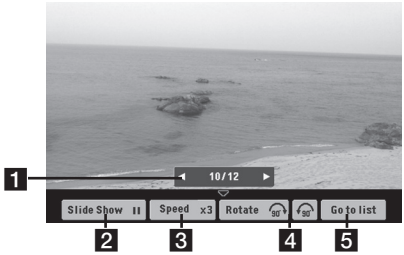

1 **Current photo/ Total number of photos** – Use < / > on the remote control to view previous/next photo.

2 **Slide Show ▶/II** – Press ◎ on the remote control to start or pause slide show.

3 **Speed x3/ x2/ x1** – Use ◎ on the remote control to select a delaying speed between photos in a slide show.

4 **Rotate** – Press ◎ on the remote control to rotate the photo.

5 **Go to list** – Press ◎ on the remote control to return [Photo] menu.

USB Operations

1. Connect the USB device to the USB port.
2. Select USB function by pressing **F**.

To	Do this
Stop	Press ☐.
Playback	Press ▷ on the remote control or ▷II on the unit
Pause	Press II on the remote control or ▷II on the unit.
Scanning for a section within a file	Press and hold ⏮/⏭ or ◁◁/▷▷ on the remote control during playback and release it at the point you want to listen to.
Skipping to the next/ previous file	- In stop status, Press ⏮/⏭ to go to the next/ previous file. - During playback, Press ⏭ to go to the next file. Playing in less than 3 seconds, press ⏮ to go to the previous file. Playing after 3 seconds, press ⏮ to go to the beginning of the file.
Playing repeatedly or randomly	Press **REPEAT** on the remote control repeatedly. Refer to the note for details about the display change.

Note

- Repeat/Random playback operates as follows.

On Display	Description
OFF	Plays songs in order and stops the playback.
ONE	Plays a same song repeatedly.
ALL	Plays all the songs on repeatedly.
RANDOM	Plays all the songs randomly and repeatedly.

- USB function is only available on music playback.
- appears on the window in repeat mode.
- appears on the window in random mode.

Note

- USB Folders/Files are recognized as below.

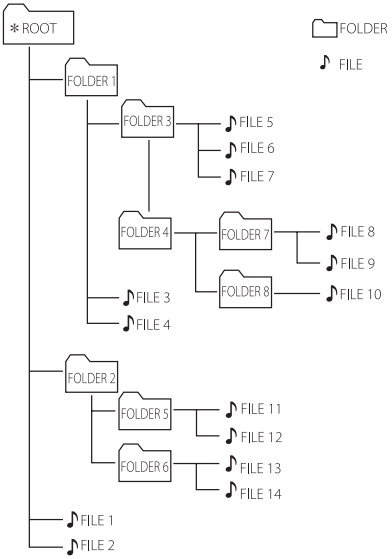

- File will be played from ♪ file No.1 to ♪ file No.14 one by one.
- Files will be presented in order recorded and may be presented differently according to the record circumstances.

*ROOT: The first screen you can see when a computer recognize the USB is "ROOT".

Using BLUETOOTH® wireless technology

About Bluetooth

Bluetooth is wireless communication technology for short range connection.

The sound may be interrupted when the connection interfered by the other electronic wave or you connect the **Bluetooth** in the other rooms.

Connecting individual devices under **Bluetooth** wireless technology does not incur any charges.
A mobile phone with **Bluetooth** wireless technology can be operated via the Cascade if the connection was made via **Bluetooth** wireless technology.

- Available Devices: Smart phone, MP3, Notebook, etc.
- Version: 4.2
- Codec: SBC

Bluetooth Profiles

In order to use **Bluetooth** wireless technology, devices must be able to interpret certain profiles. This unit is compatible with following profile.

A2DP (Advanced Audio Distribution Profile)

Listening to music stored on the Bluetooth devices

Pairing your unit and Bluetooth device

Before you start the pairing procedure, make sure the **Bluetooth** feature is activated on your **Bluetooth** device. Refer to your **Bluetooth** device's user guide. Once a pairing operation is performed, it does not need to be performed again.

1. Turn on the unit and select BT function by pressing **F.**
   "READY"on the display window.
2. Operate the **Bluetooth** device and perform the pairing operation. When searching for this unit with the **Bluetooth** device, a list of the devices found may appear in the **Bluetooth** device display depending on the type of **Bluetooth** device. Your unit appears as "LG-ON2D".

Note

Depending on the **Bluetooth** device type, some devices have a different pairing way. For details about **Bluetooth** pairing, refer to your **Bluetooth** device manual.

3. When this unit is successfully connected with your **Bluetooth** device, "PAIRED" appears on the display window and "BT" will appear on the display window.
4. Listen to music.
   To play a music stored on your **Bluetooth** device, refer to your **Bluetooth** device's user guide.

Note

- When using **Bluetooth** technology, you have to make a connection between the unit and the **Bluetooth** device as close as possible and keep the distance.
  However, it may not work well in certain situations as described below:
  - There is an obstacle between the unit and the **Bluetooth** device.
  - There is a device using same frequency with **Bluetooth** technology such as a medical equipment, a microwave or a wireless LAN device.
- If **Bluetooth** connection does not work well, try pairing it again.
- To connect a new **Bluetooth** device, disconnect the currently connected **Bluetooth** device and connect a new **Bluetooth** device.
- The sound may be interrupted when the connection has interference from other electronic devices.
- Depending on the type of the device, you may not be able to use the **Bluetooth** function.
- You can enjoy wireless system using phone, MP3, Notebook, etc.

Note

- The more distance between the unit and the **Bluetooth** device, the lower the sound quality becomes.
- **Bluetooth** connection will be disconnected when the unit is turned off or the **Bluetooth** device gets too far from the unit.
- When **Bluetooth** connection is disconnected, connect the **Bluetooth** device to the unit again.
- When a **Bluetooth** device is not connected, "READY" appears on the display window.
- When you use the **Bluetooth** function, adjust the volume to a proper level on the **Bluetooth** device.
- When entering the **Bluetooth** function, this unit automatically connects to the last connected **Bluetooth** device or the device which played back last.
  (Auto connection may not be supported depending on the connected device specifications.)

Radio Operations

Be sure that the FM antenna is fully extended.

Listening to the radio

1. Press **F** until FM appears in the display window. The last received station is tuned in.
2. Auto tuning:
   Press and hold **TUNING-/+** on the remote control or ⏮/⏭ on the unit until the frequency indication starts to change, then release. Scanning stops when the unit tunes in a station.

   Or

   Manual tuning:
   Press **TUNING-/+** on the remote control or ⏮/⏭ on the unit repeatedly.
3. Adjust the volume by pressing **VOL +/-**.

Presetting the Radio Stations

You can preset 50 stations for FM.

Before tuning, make sure to turn down the volume.

1. Press **F** until FM appears in the display window.
2. Select the desired frequency by pressing **TUNING-/+** on the remote control or ⏮/⏭ on the unit.
3. Press ◎ on the remote control. A preset number will blink in the display window.
4. Press **PRESET +/-** on the remote control to select the preset number you want.
5. Press ◎ on the remote control. The station is stored.
6. Repeat steps 2 to 5 to store other stations.
7. To listen a preset station, press **PRESET +/-** or **0** to **9** numerical buttons on the remote control.

Deleting all the saved stations

1. Press **CLEAR** on the remote control.
   "DEL" and "ALL" will flash up alternately on the unit display.
   If there is no saved radio stations, it displays "NONE".
2. Press **CLEAR** on the remote control to erase all the saved radio stations.
   "DELETED ALL" will scroll and on the display window.

Sound adjustment

Setting the sound mode

This system has a number of pre-set equalizers. The displayed items for the equalizer may be different depending on sound sources and effects.

You can select a desired sound mode by using **EQ**.

On Display	Description
BASS (BASS BLAST) or BASS+ (BASS BLAST+)	Reinforces the bass and powerful sound.
STANDARD	You can enjoy optimized sound.

Adjusting BASS level

You can adjust the bass sound level as your preference. Adjust the bass sound level by pressing **BASS -/+**.

Range: -5(MIN) to +5(MAX)

Other Operations

Turn off the sound temporarily

Press 🔇 on the remote control to mute your sound.

You can mute your unit, for example, to answer the telephone, the "🔇X" and will appear in the display window.

To cancel it, press 🔇 on the remote control again or change the volume level.

Resume stop

The unit records the point where you pressed ☐ depending on the disc.

If you press ☐ twice, the unit will clear the stopped point.

Last Scene Memory

DVD

This unit memorizes last scene from the last disc that is viewed. The last scene remains in memory even if you remove the disc from the unit or switch off the unit. If you load a disc that has the scene memorized, the scene is automatically recalled.

Power Resume - Optional

DVD

Even if the power suddenly goes out, turn on the unit and then it plays a position where the contents is being played. System will periodically save current playback status.

System Select - Optional

You must select the appropriate system mode for your TV system. Press and hold II on the remote control for more than five seconds to be able to select a system in the
[Home Menu]. (NTSC ⟷ PAL)

Note

If the USB device is connected or a disc is inserted, this function is not operated.

Using Microphone

1. Connect your microphone to the MIC jack.
2. Play the music you want.
3. Sing along with the accompaniment. Adjust the microphone volume by pressing **MIC VOL -/+**.

Note

- When not using the microphone, set the MIC volume to minimum or turn off the MIC and remove the microphone from the MIC jack.
- If the microphone is set too near the speaker, a howling sound may be produced. In this case, move the microphone away from the speaker or decrease the sound level by using the **MIC VOL -**.
- If sound through the microphone is extremely loud, it may be distorted. In this case, set the microphone volume by pressing **MIC VOL -**.

Adjusting MIC ECHO level

When you connect your microphone to the MIC jack, you can adjust an echo effect to the sound from the microphones by pressing **MIC ECHO -/+.**

Range: 0(MIN) to 9(MAX)

Note

If a microphone is not connected, "INSERT MIC" appears in the display window.

Sleep Timer Setting

Press **SLEEP** on the remote control repeatedly to select delay time between 10 and 180 minutes. After the delay time, the unit will be turned off.

To cancel the sleep function, press **SLEEP** on the remote control repeatedly until "OFF" appears.

Note

- You can check the remaining time before the unit is turned off. Press **SLEEP** on the remote control to check or change the remaining time.
- You can edit the remain time when the remaining time or "DIMMER" is displayed.

Dimmer

Press **SLEEP** on the remote control once.
The display window will be darkened by half.

To cancel it, press **SLEEP** on the remote control repeatedly until "OFF" appears.

Troubleshooting

General

Problem	Cause & Solution
The unit does not work properly	• Turn off the power of this unit and the connected external device (TV, Woofer, DVD-player, Amplifier, etc.) and turn it on again. • Disconnect the power cord of this unit and the connected external device (TV, Woofer, DVD-player, Amplifier, etc.) and then try connecting again. • Previous setting may not be saved when device power is shut off.
No power	• Plug the power cord into the wall outlet securely. • Check whether electricity failed. Check the condition by operating electronic devices using the same AC outlet.
No picture	• Select the appropriate video input mode on the TV so the picture from the unit appears on the TV screen. • Connect the video cables securely to both the TV and unit.
No sound	• Check whether you select right function. Press function button and check if you have selected the right function.
The DVD picture quality is poor	• Clean the disc using a soft cloth with outward strokes.
A DVD/CD will not play	• Insert a disc. • Insert a playable disc (check the disc type, colour system and regional code). • Place the disc with the label or printed side facing upwards. • Enter your password or change the rating level.
Humming noise heard while a DVD or CD is playing	• Clean the disc using a soft cloth with outward strokes. • Move unit and audio components further away from your TV.
Radio stations cannot be tuned in properly.	• The antenna is positioned poorly. Reorient the antenna position to good reception. • The signal strength of the radio station is too weak. Tune to the station manually. • No stations have been preset or preset stations have been cleared (when tuning by scanning preset channels). Preset some radio stations, see page 32 for details.
The unit does not start playback	• An unplayable disc is inserted. Check the playable disc. • No disc is inserted. Insert a disc. • The disc is dirty. Clean the disc. (Page 41) • The disc is inserted upside down. Place the disc with the label or printed side facing upwards.

Problem	Cause & Solution
The remote control does not work properly.	• The remote control is too far from the unit. Operate the remote control within about 7 m (23 feet). • There is an obstacle in the path of the remote control and the unit. Remove the obstacle. • The batteries in the remote control are exhausted. Replace the batteries with new ones.
USB is not recognized.	• Format the USB device and connect it again. When formatting the USB device, select the available file system. (Page 9)

Area Code List

Choose an area code from this list.

Area	Code	Area	Code	Area	Code	Area	Code
Afghanistan	AF	Fiji	FJ	Monaco	MC	Singapore	SG
Argentina	AR	Finland	FI	Mongolia	MN	Slovak Republic	SK
Australia	AU	France	FR	Morocco	MA	Slovenia	SI
Austria	AT	Germany	DE	Nepal	NP	South Africa	ZA
Belgium	BE	Great Britain	GB	Netherlands	NL	South Korea	KR
Bhutan	BT	Greece	GR	Antilles	AN	Spain	ES
Bolivia	BO	Greenland	GL	New Zealand	NZ	Sri Lanka	LK
Brazil	BR	Hong Kong	HK	Nigeria	NG	Sweden	SE
Cambodia	KH	Hungary	HU	Norway	NO	Switzerland	CH
Canada	CA	India	IN	Oman	OM	Taiwan	TW
Chile	CL	Indonesia	ID	Pakistan	PK	Thailand	TH
China	CN	Israel	IL	Panama	PA	Turkey	TR
Colombia	CO	Italy	IT	Paraguay	PY	Uganda	UG
Congo	CG	Jamaica	JM	Philippines	PH	Ukraine	UA
Costa Rica	CR	Japan	JP	Poland	PL	United States	US
Croatia	HR	Kenya	KE	Portugal	PT	Uruguay	UY
Czech Republic	CZ	Kuwait	KW	Romania	RO	Uzbekistan	UZ
Denmark	DK	Libya	LY	Russian Federation	RU	Vietnam	VN
Ecuador	EC	Luxembourg	LU	Saudi Arabia	SA	Zimbabwe	ZW
Egypt	EG	Malaysia	MY	Senegal	SN		
El Salvador	SV	Maldives	MV				
Ethiopia	ET	Mexico	MX				

Language code List

Use this list to input your desired language for the following initial settings: [Disc Audio], [Disc Subtitle] and [Disc Menu].

Language	Code	Language	Code	Language	Code	Language	Code
Afar	6565	French	7082	Lithuanian	7684	Sindhi	8368
Afrikaans	6570	Frisian	7089	Macedonian	7775	Singhalese	8373
Albanian	8381	Galician	7176	Malagasy	7771	Slovak	8375
Ameharic	6577	Georgian	7565	Malay	7783	Slovenian	8376
Arabic	6582	German	6869	Malayalam	7776	Spanish	6983
Armenian	7289	Greek	6976	Maori	7773	Sudanese	8385
Assamese	6583	Greenlandic	7576	Marathi	7782	Swahili	8387
Aymara	6588	Guarani	7178	Moldavian	7779	Swedish	8386
Azerbaijani	6590	Gujarati	7185	Mongolian	7778	Tagalog	8476
Bashkir	6665	Hausa	7265	Nauru	7865	Tajik	8471
Basque	6985	Hebrew	7387	Nepali	7869	Tamil	8465
Bengali; Bangla	6678	Hindi	7273	Norwegian	7879	Telugu	8469
Bhutani	6890	Hungarian	7285	Oriya	7982	Thai	8472
Bihari	6672	Icelandic	7383	Panjabi	8065	Tonga	8479
Breton	6682	Indonesian	7378	Pashto, Pushto	8083	Turkish	8482
Bulgarian	6671	Interlingua	7365	Persian	7065	Turkmen	8475
Burmese	7789	Irish	7165	Polish	8076	Twi	8487
Byelorussian	6669	Italian	7384	Portuguese	8084	Ukrainian	8575
Chinese	9072	Japanese	7465	Quechua	8185	Urdu	8582
Croatian	7282	Kannada	7578	Rhaeto-Romance	8277	Uzbek	8590
Czech	6783	Kashmiri	7583	Rumanian	8279	Vietnamese	8673
Danish	6865	Kazakh	7575	Russian	8285	Volapük	8679
Dutch	7876	Kirghiz	7589	Samoan	8377	Welsh	6789
English	6978	Korean	7579	Sanskrit	8365	Wolof	8779
Esperanto	6979	Kurdish	7585	Scots Gaelic	7168	Xhosa	8872
Estonian	6984	Laothian	7679	Serbian	8382	Yiddish	7473
Faroese	7079	Latin	7665	Serbo-Croatian	8372	Yoruba	8979
Fiji	7074	Latvian, Lettish	7686	Shona	8378	Zulu	9085
Finnish	7073	Lingala	7678				

Trademarks and Licenses

All other trademarks are trademarks of their respective owners.

Manufactured under license from Dolby Laboratories. Dolby, Dolby Audio, and the double-D symbol are trademarks of Dolby Laboratories.

The terms HDMI, HDMI High-Definition Multimedia Interface, and the HDMI Logo are trademarks or registered trademarks of HDMI Licensing Administrator, Inc.

"DVD Logo" is a trademark of DVD Format/Logo Licensing Corporation.

The **Bluetooth®** word mark and logos are registered trademarks owned by the Bluetooth SIG, Inc. and any use of such marks by LG Electronics is under license.

Other trademarks and trade names are those of their respective owners.

Notes on Copyrights

- This product incorporates copyright protection technology that is protected by U.S. patents and other intellectual property rights. Use of this copyright protection technology must be authorized by Rovi, and is intended for home and other limited viewing uses only unless otherwise authorized by Rovi. Reverse engineering or disassembly is prohibited.
- Under the U.S. Copyright laws and Copyright laws of other countries, unauthorized recording, use, display, distribution, or revision of television programs, videotapes, BD-ROM discs, DVDs, CDs and other materials may subject you to civil and/or criminal liability.

Maintenance

Notes on Discs

Handling Discs

Never stick paper or tape on the disc.

Storing Discs

After playing, store the disc in its case. Do not expose the disc to direct sunlight or sources of heat and never leave it in a parked car exposed to direct sunlight.

Cleaning Discs

Fingerprints and dust on the disc can cause poor picture quality and sound distortion. Before playing, clean the disc with a clean cloth. Wipe the disc from the center to out.

Do not use strong solvents such as alcohol, benzine, thinner, commercially available cleaners, or anti-static spray intended for old vinyl records.

Handling the Unit

When shipping the unit

Please save the original shipping carton and packing materials. If you need to ship the unit, for maximum protection, re-pack the unit as it was originally packed at the factory.

Keeping the exterior surfaces clean

Do not use volatile liquids such as insecticide spray near the unit. Wiping with strong pressure may damage the surface. Do not leave rubber or plastic products in contact with the unit for a long period of time.

Cleaning the unit

To clean the unit, use a soft, dry cloth. If the surfaces are extremely dirty, use a soft cloth lightly moistened with a mild detergent solution. Do not use strong solvents such as alcohol, benzine, or thinner, as these might damage the surface of the unit.

Maintaining the Unit

The unit is a high-tech, precision device. If the optical pick-up lens and disc drive parts are dirty or worn, the picture quality could be diminished. For details, please contact your nearest authorized service center.

Specifications

General	
Power requirements	Refer to the main label.
Power consumption	Refer to the main label.
Dimensions (W x H x D)	Approx. 300.0 mm x 390.0 mm x 324.0 mm
Operating temperature	5 °C to 35 °C
Operating humidity	5 % to 60 % RH

Inputs/ Outputs	
Analog audio in (AUX IN)	600 mV, 600 Ω, RCA jack (L, R) x 1
HDMI OUT (video/audio)	19 pin (Type A, HDMI™ Connector) x 1
Microphone (MIC 1/2)	Sensitivity 20 mV (1 kHz), 6.3 mm jack x 2

Tuner	
FM Tuning Range	87.5 to 108.0 MHz or 87.50 to 108.00 MHz

System	
Frequency response	60 to 20,000 Hz
Signal-to-noise ratio	More than 70 dB
Dynamic range	More than 70 dB
Bus Power Supply (USB)	5 V ⎓ 500 mA

- Design and specifications are subject to change without notice.

LG

Life's Good