ENGLISH

FRANÇAIS

ESPAÑOL

OWNER'S MANUAL

AIR CONDITIONER

Please read this manual carefully before operating your set and retain it for future reference. Installation work must be performed in accordance with the national wiring standards by authorized personnel only.
This equipment shall be provided with a supply conductor complying with the national regulation.

Original instruction

P/NO : MFL68961014
Rev.02_032525

www.lghvac.com
www.lg.com

Copyright © 2020-2025 LG Electronics Inc. All rights reserved.

TABLE OF CONTENTS

3 SAFETY PRECAUTIONS

8 PRIOR TO OPERATION

8 Preparing for Operation
8 Usage
8 Cleaning and Maintenance
8 Service

9 MAINTENANCE AND SERVICE

9 Convertible
10 When the air conditioner is not going to be used for a long time
10 Operation Tips
11 Before you call for service...

12 LIMITED WARRANTY (USA)

13 LIMITED WARRANTY (CANADA)

Safety Precautions

READ ALL INSTRUCTIONS BEFORE USE

Your safety and the safety of others are very important.

We have provided many important safety messages in this manual and on your appliance. Always read and follow all safety messages.

⚠ This is the safety alert symbol.
This symbol alerts you to potential hazards that can kill or injure you and others.
All safety messages will follow the safety alert symbol and either the word WARNING, or CAUTION.

⚠ WARNING

Failure to follow these instructions could result in death or serious injury.

⚠ CAUTION

Failure to follow these instructions could result in minor or moderate injury or damage to the product.
All safety messages will tell you what the potential hazard is, inform you as to how to reduce the chance of injury, and tell you what may happen if the instructions are not followed.

IMPORTANT SAFETY INSTRUCTIONS

⚠ WARNING

To reduce the risk of explosion, fire, death, electric shock, scalding or injury to persons when using this product, follow basic precautions, including the following:

- Installation or repairs done by unauthorized persons can pose hazards to you and others.
- Installation MUST conform to the local building codes or, in the absence of local codes, the National Electrical Code NFPA 70/ANSI C1-1003 or current edition and Canadian Electrical Code Part 1 CSA C22. 1.
- The information contained in this manual is intended for use by a qualified service technician who is familiar with the safety procedures and equipped with the proper tools and test instruments.
- Failure to read and follow all instructions in this manual can result in equipment malfunction, property damage, personal injury and/or death.
- When the power cord needs to be replaced, the replacement work should be performed by authorized personnel using only genuine replacement parts.
- This appliance is not intended for use by persons (including children) with reduced physical, sensory or mental capabilities, or lack of experience and knowledge, unless they have been given supervision or instruction concerning the use of the appliance by a person responsible for their safety. Children should be supervised to ensure that they do not play with the appliance.

Important Safety Instructions

⚠ WARNING

Installation

Contact the dealer to have the air conditioner installed.

- Incomplete installation performed by yourself may result in a water leakage, electric shock, and fire.

Check the foundation for damaged on a continuous basis, especially if it has been in use for a long time.

- It may cause injury or damage to the unit or other property.

Contact the dealer for repairs, maintenance and to reinstall the airconditioner.

- Incomplete installation performed by yourself may result in a water leakage, electric shock, and fire.

Be sure to only use accessories made by LG which are specifically designed for use with the equipment and have them installed by a professional.

- Improper installation or attachment of equipment or accessories could result in electric shock, a short circuit, leaks, fire or other damage to the equipment.

In the case of refrigerant leakage, consult the dealer. When installing the air conditioner in a small room, it is necessary to take proper measures so that even when it leaks, the amount of any leaked refrigerant does not exceed the limiting concentration even when it leaks. If the refrigerant leakage exceeds the limiting concentration level, an oxygen deficiency-related accident may occur.

- There is a risk of asphyxiation which could lead to serious injury or death.

Do not install the unit in an area where there are flammable materials.

- There is a risk of explosion that could result in serious injury or death.

Use a vacuum pump or insert (nitrogen) gas when performing a leakage test or air purge. Do not allow air etc. to enter the refrigerant circuit (piping). Never use refrigerants that are not specified on the specification. label and in the manuals.

- There is a risk of death, injury, fire or explosion.

Power

Do not attempt to do electrical work or grounding work unless you are licensed to do so. Consult with the dealer for electrical work and grounding work.

- There is a risk.

Do not modify or extend the power cable.

- There is risk of fire or electric shock.

Be sure to establish an earth.

- There is risk of fire or electric shock.

Be sure to install an earth leakage breaker.

- There is risk of fire or electric shock.

Always install a dedicated circuit and breaker.

- Improper wiring or installation may cause fire or electric shock.

Do not turn on the breaker or power if the front panel, cabinet, top cover, or control box cover are removed or opened.

- Doing so could cause fire, electric shock, explosion or death.

Do not use a defective or underrated circuit breaker. Use this appliance on a dedicated circuit.

- There is a risk of fire or electric shock.

Consult with the installation contractor for cleaning or maintenance. Turn off all electrical power before doing any cleaning or maintenance.

- There is a risk of water leakage, electric shock or serious injury.

Take care to ensure that the power cable cannot be pulled out or damaged during operation.

- There is a risk of fire or electric shock.

Do not place anything on the power cable.

- There is a risk of fire or electric shock.

Do not turn off the power immediately after stopping operation. Always wait for at least five minutes before turning off the power.

- Otherwise, water leakage may occur.

Indoor/outdoor wiring connections must be secured tightly and the cable should be routed properly so that there is no force pulling the cable from the connection terminals.

- Improper or loose connections can cause heat generation or fire.

Do not touch (operate) the product with wet hands.

- There is a risk of electrical shock.

Operation

Be sure to use only those parts which are listed in the SVC parts list. Never attempt to modify the equipment.

- The use of inappropriate parts can cause an electrical shock or fire.

Do not install the air conditioner at any place where flammable gas may leak out. If the gas leaks out and stays around the air conditioner, a fire may break out.

- There is a risk of explosion, fire and serious injury.

Never use flammable spray such as hair spray, lacquer or paint near the unit.

- Flammable spray may cause a fire.

If equipment utilizing a burner is used in the same room as the air conditioner,
there is the danger of oxygen deficiency, which could lead to asphyxiation. Be sure to ventilate the room sufficiently to avoid this hazard.

- There is a risk of serious injury or death.

Do not put fingers or other objects into the air inlet or air outlet. Never remove the fan guard of the unit.

- The fan rotates at a high speed and will cause injury.

Never sprinkle or spill water or liquids on unit.

- Doing so could cause fire, failure of the product, or electric shock.

Never let the indoor unit or the remote controller get wet.

- Water can cause an electric shock or a fire.

Do not let the air conditioner run while a door or window is open on a day with high humidity. This could result in excessive moisture and water damage.

- Excess moisture may collect and cause water damage to walls or furniture.

If there are any abnormalities in the operation of the air conditioner such as strange sounds, smoke or fire. turn off the power and contact the dealer immediately.

- There is a risk of severe injury or death.

Take care to ensure that nobody can step on or fall onto the outdoor unit.

- This could result in personal injury and product damage.

Stop operation and close all window in storm or hurricane. If possible, remove the product from the window before the hurricane arrives.

- There is a risk of property damage, product failure, or electric shock.

If the product becomes soaked (flooded or submerged), contact the dealer.

- There is a risk of fire or electric shock.

Do not use the product in a tightly closed space for a long time.

- Doing so could result in a state of oxygen deficiency.

Maintenance

The heat exchanger fins are sharp edges enough to cut. To avoid injury, wear gloves or cover the fins while working around them.

Tear apart and throw away plastic packaging bags so that children will not play with them.

- Children playing with plastic bags are at risk of death by suffocation.

Safely dispose of the packing materials. Packing materials, such as nails and other metal or wooden parts.

- These materials could cause puncture wounds or other injuries.

⚠ CAUTION

Installation

If the refrigerant gas leaks during the installation, ventilate the area immediately.

- Such leakage it can be harmful for your health.

Always check for gas (refrigerant) leakage after installation or repair of product.

- Low refrigerant levels may cause product failure.

Keep the product level, even when installing it.

- This will help to avoid vibration or water leakage.

Use two or more people to lift and transport the product.

- This will help to avoid personal injury.

Installation work must be performed in accordance with the National Electric Code by qualified and authorized personnel only.

Do not place objects in direct proximity of the outside unit. Do not let leaves and other debris accumulate around the unit. Leaves are a hotbed for small animals, which can enter the unit. Once inside the unit, these animals can lead to the unit malfunctioning, and end up causing in smoke or fire when they make contact with electrical parts.

- There is a risk of fire or electric shock.

Do not install the product where it will be exposed to sea wind (salt spray) directly.

- This can cause corrosion on the product. Corrosion, particularly on the condenser and evaporator fins, could cause product malfunction or inefficient operation.

Make sure that the drainpipe is installed properly to drain water. Arrange the drain hose to ensure smooth drainage.

- Incomplete drainage may lead to water damage done to the building, furniture, etc. If no water is discharged from the drainpipe while the air conditioner or heat pump is in the cooling mode, it may be because the drainpipe has become clogged with dust or dirt, and could result in water leakage in the indoor unit. In such a situation, stop operating the air conditioner or heat pump and contact the dealer.

Do not install the product where the noise or hot air from the outdoor unit could be harmful to your immediate surroundings.

- Improper placement could cause problems for your neighbors.

The Limited Warranty is void and of no effect, and LG will have no liability hereunder to any Customer or third party, to the extent any of the following occur: acts, omissions, and conduct of any and all third parties including, but not limited to, the installing contractor and any repairs, service or maintenance by unauthorized or unqualified persons.

Do not install the unit in potentially explosive atmospheres.

Operation

If refrigerant gas leaks while the unit is being repaired do not touch the leakaing refrigerant gas.

- The refrigernat gas can cause frostbite (cold burn)

Do not mix air or gases other than the specified refrigerant used in the system.

- Air entering the refrigerant system can lead to excessively high pressure causing equipment damage or injury.

Make sure that there are no obstacles close to the outdoor unit. The presence of obstacles close to the outdoor unit may reduce the performance of outdoor unit or increase its operating sound.

- This could cause product failure.

Do not use the air conditioner for any other purposes other than comfort cooling or heating. Do not use the unit for cooling precision instruments, food, plants, animals or works of art.

- Doing so could lead to risk of damage or loss of property.

Replace all the batteries in the remote control with new ones of the same type. Do not mix old and new batteries or different types of batteries.

- Doing so could lead to a risk of fire or explosion.

Do not recharge or disassemble the batteries. Do not dispose of batteries in a fire.

- They may burn or explode.

If the liquid from the batteries gets onto your skin or clothes, wash it well with clean water. Do not use the remote if the batteries have leaked.

- The chemicals in batteries could cause burns or other health hazards.

If you ingest the liquid from the batteries, brush your teeth and see a doctor. Do not use the remote if the batteries have leaked.

- The chemicals in batteries could cause burns or other health hazards.

Do not step on or put anything on the product. (outdoor units)

- Doing so could lead to a risk of personal injury and product failure.

The appliance is not intended for use by young children or infirm persons without supervision.

Do not allow a child to mount on the unit or place any object on it. Do not let children play on and around the unit.

- Falling or tumbling may result in injury. If a child touches the unit carelessly, it may result in injury.

Do not drink the water drained from the product.

- It is not sanitary and could cause serious health issues.

Maintenance

Contact the dealer for repair or maintenance.

Do not wipe the controller operation panel with benzine, thinner, chemical dust cloths, etc. The panel may get discolored or the coating may peel off. If it is very dirty, soak a cloth in water-diluted neutral detergent, squeeze it well and wipe the panel clean. Then wipe it dry it with another dry cloth.

- There is a risk of damage to the plastic parts of the product.

Do not insert hands or other objects through the air inlet or outlet while the product is operating.

- There are sharp and moving parts that could cause personal injury.

Use a firm stool or ladder when cleaning or maintaining the product.

- Be careful and avoid personal injury.

Do not touch the metal parts of the product when removing the air filter. They are very sharp!

- There is a risk of personal injury.

Do not drink the water drained from the product.

- It is not sanitary and could cause serious health issues.

Do not operate the air conditioner when using a room fumigation-type insecticide.

- Failure to do so could lead to the chemicals becoming deposited in the unit, which could endanger the health of those who are hypersensitive to chemicals.

Prior to Operation

Preparing for Operation

1. Contact an installation specialist for installation.
2. Use a dedicated circuit.

Usage

1. Being exposed to direct airflow for an extended period of time could be hazardous to your health. Do not expose occupants, pets, or plants to direct airflow for extended periods of time.
2. Due to the possibility of oxygen deficiency, ventilate the room when used together with stoves or other heating devices.
3. Do not use this air conditioner for non-specified special purposes (e.g. preserving precision devices, food, pets, plants, and art objects). Such usage could damage the items.

Cleaning and Maintenance

1. Do not touch the metal parts of the unit when removing the filter. Injuries can occur when handling sharp metal edges.
2. Do not use water to clean inside the air conditioner. Exposure to water can destroy the insulation, leading to possible electric shock.
3. When cleaning the unit, first make sure that the power and breaker are turned off. The fan rotates at a very high speed during operation. There is a possibility of injury if the unit's power is accidentally triggered on while cleaning inner parts of the unit.

Service

For repair and maintenance, contact your authorized service dealer.

Maintenance and Service

Convertible

⚠ CAUTION

Before performing any maintenance, turn off the main power to the system.

Grille, Case, and Remote Control

❑ Turn the system off before cleaning.
To clean, wipe with a soft, dry cloth. Do not use bleach or abrasives.

NOTE

Supply power must be disconnected before cleaning the indoor unit.



❑ Never use any of the followings:

- Water hotter than 104 °F (40 °C). Could cause deformation and/or discoloration.
- Volatile substances
  Could damage the surfaces of the air conditioner.

AIR FILTERS

The air filters behind the front grille should be checked and cleaned once in every 2 weeks or more often if neccessary.

1. Lift the front access panel and pull the filter tab slightly forward to remove the filter.
2. Clean the filter with a vacuum cleaner or warm, soapy water.
   - If dirt is conspicuous, wash with a solution of detergent in lukewarm water.
   - If hot water 104 °F (40 °C) or more is used, it may be deformed.
3. After washing with water, dry well in the shade.
4. Re-install the air filter.

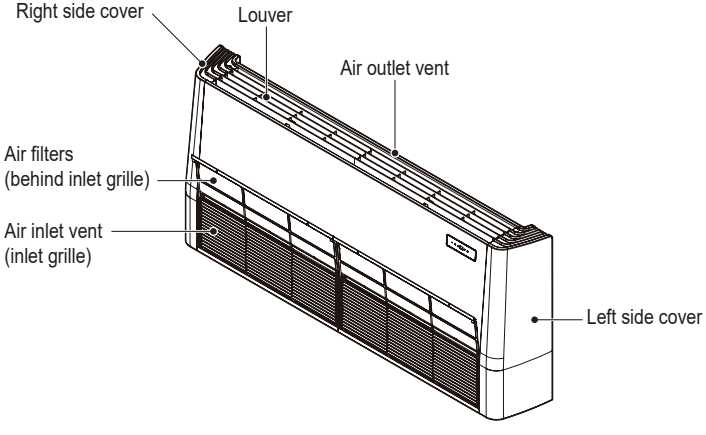

When the air conditioner is not going to be used for a long time

When it is not going to be used for a long time.

1. **Operate the air conditioner at the following settings for 2 to 3 hours.**
   - Type of operation: Fan operation mode.
   - This will dry out the internal mechanisms.
2. **Turn off the breaker.**

⚠ CAUTION

Turn off the breaker when the air conditioner is not going to be used for a long time.

Dirt may collect and may cause a fire.

Helpful information

The air filters and your electiric bill. If the air filters become clogged with dust, the cooling capacity will drop, and 6 % of the electricity used to operate the air conditioner will be wasted.

When the air conditioner is to be used again.

1. **Clean the air filter and install it in the indoor unit.**
2. **Check that the air inlet and outlet of the indoor/outdoor unit are not blocked.**
3. **Check that the ground wire is connected correctly. It may be connect to the indoor unit side.**

Operation Tips

Do not overcool the room.

This is not good for the health and wastes electricity.

Keep blinds or curtains closed.

Do not let direct sunshine enter the room when the air conditioner is in operation.

Keep the room temperature uniform.

Adjust the vertical and horizontal airflow direction to ensure a uniform temperature in the room.

Make sure that the doors and windows are shut tight.

Avoid opening doors and windows as much as possible to keep the cool air in the room.

Clean the air filter regularly.

Blockages in the air filter reduce the airflow and lower cooling and dehumidifying effects. Clean at least once every two weeks.

Ventilate the room occasionally.

Since windows are kept closed, it is a good idea to open them and ventilate the room now and then.

Before you call for service...

Troubleshooting Tips! Save time and money!

Check the following points before requesting repairs or service.... If the malfunction persist, please contact your dealer.

The air conditioner does not operate.	The room has a peculiar odor.	It seems that condensation is leaking from the air conditioner.	Air conditioner does not operate for about 3 minutes when restart.
• Have you made a mistake in timer operation? • Has the fuse blown or has the circuit breaker been tripped?	• Check that this is not a damp smell exuded by the walls, carpet, furniture or cloth items in the room.	• Condensation occurs when the airflow from the air conditioner cools the warm room air.	• This is the protector of the mechanism. • Wait about three minutes and operation will begin.
Does not cool or heat effectively.	**The air conditioner operation is noisy.**	**Crack sound is heard.**	**Remote control display is faint, or no display at all.**
• Is the air filter dirty? See air filter cleaning instructions. • The room may have been very hot when the room air conditioner was first turned on. Allow time for it to cool down. • Has the temperature been set incorrectly? • Are the indoor unit's air inlet or outlet vents obstructed?	• For a noise that sounds like water flowing. - This is the sound of freon flowing inside the air conditioner unit. • For a noise that sounds like the compressed air releasing into atmosphere. - This is the sound of the dehumidifying water being processed inside the air conditioning unit.	• This sound is generated by the expansion/ constriction of the front panel, etc. due to changes of temperature.	• Are the batteries depleted? • Are the batteries inserted in the opposite (+) and (-) directions?

NOTE

• Water resistant: The outdoor side of this appliance is WATER RESISTANT.
The indoor side is not water resistant and should not be exposed to excess water.
• Some functions may not be supported, depending on the model.

LIMITED WARRANTY (USA)

The product's full Limited Warranty terms and conditions and arbitration requirements are available at https://www.lghvac.com

LIMITED WARRANTY (CANADA)

THE PRODUCT'S FULL LIMITED WARRANTY TERMS AND CONDITIONS ARE AVAILABLE AT HTTPS://WWW.LGHVAC.COM.

ARBITRATION NOTICE: THIS LIMITED WARRANTY CONTAINS AN ARBITRATION PROVISION THAT REQUIRES YOU AND LG TO RESOLVE DISPUTES BY BINDING ARBITRATION INSTEAD OF IN COURT, UNLESS THE LAWS OF YOUR PROVINCE OR TERRITORY DO NOT PERMIT THAT, OR, IN OTHER JURISDICTIONS, IF YOU CHOOSE TO OPT OUT. FOR FURTHER CLARITY, THIS ARBITRATION PROVISION IS NOT APPLICABLE TO CONSUMERS RESIDING IN ONTARIO AND QUÉBEC. IN ARBITRATION, CLASS ACTIONS AND JURY TRIALS ARE NOT PERMITTED. PLEASE SEE THE SECTION TITLED "PROCEDURE FOR RESOLVING DISPUTES" BELOW.

DISCLAIMER:

IF YOU ARE A CONSUMER SUBJECT TO QUÉBEC AND ONTARIO'S CONSUMER PROTECTION ACT, THE EXCLUSION OF WARRANTIES CONTAINED IN THIS SECTION DO NOT EXCLUDE OR LIMIT THE RIGHTS AND REMEDIES THAT YOU MAY HAVE UNDER SUCH ACT, INCLUDING THE RIGHT TO MAKE A CLAIM UNDER ANY OF THE STATUTORY WARRANTIES PROVIDED THEREUNDER.

PROCEDURE FOR RESOLVING DISPUTES:

EXCEPT WHERE PROHIBITED AT LAW (INCLUDING WITH RESPECT TO QUÉBEC AND ONTARIO CONSUMERS), ALL DISPUTES BETWEEN YOU AND LG ARISING OUT OF OR RELATING IN ANY WAY TO THIS LIMITED WARRANTY OR THE PRODUCT SHALL BE RESOLVED EXCLUSIVELY THROUGH BINDING ARBITRATION, AND NOT IN A COURT OF GENERAL JURISDICTION. EXCEPT WHERE PROHIBITED AT LAW (INCLUDING WITH RESPECT TO QUÉBEC AND ONTARIO CONSUMERS), YOU AND LG BOTH IRREVOCABLY AGREE TO WAIVE THE RIGHT TO A JURY TRIAL AND TO BRING OR PARTICIPATE IN A CLASS ACTION.

Definitions. For the purposes of this section, references to "LG" mean LG Electronics Canada, Inc., its parents, subsidiaries and affiliates, and each of their officers, directors, employees, agents, beneficiaries, predecessors in interest, successors, assigns and suppliers; references to "dispute" or "claim" shall include any dispute, claim or controversy of any kind whatsoever (whether based in contract, tort, statute, regulation, ordinance, fraud, misrepresentation or any other legal or equitable theory) arising out of or relating in any way to the sale, condition or performance of the product or this Limited Warranty.

Notice of Dispute. In the event you intend to commence an arbitration proceeding, you must first notify LG in writing at least 30 days in advance of initiating the arbitration by sending a letter to LGECI Legal Team at 20 Norelco Drive, North York, Ontario, Canada M9L 2X6 (the "Notice of Dispute"). You and LG agree to engage in good faith discussions in an attempt to amicably resolve your claim. The notice must provide your name, address, and telephone number; identify the product that is the subject of the claim; and describe the nature of the claim and the relief being sought. If you and LG are unable to resolve the dispute within 30 days of LG's receipt of the Notice of Dispute, the dispute shall be resolved by binding arbitration in accordance with the procedure set out herein. You and LG both agree that, during the arbitration proceeding, the terms (including any amount) of any settlement offer made by either you or LG will not be disclosed to the arbitrator until the arbitrator determines the dispute.

Agreement to Binding Arbitration and Class Action Waiver. Upon failure to resolve the dispute during the 30 day period after LG's receipt of the Notice of Dispute, you and LG agree to resolve any claims between you and LG only by binding arbitration on an individual basis, unless you opt out as provided below, or you reside in a jurisdiction that prevents full application of this clause in the circumstances of the claims at issue (in which case if you are a consumer, this clause will only apply if you expressly agree to the arbitration). To the extent permitted by applicable law, any dispute between you and LG shall not be combined or consolidated with a dispute involving any other person's or entity's product or claim. More specifically, without limitation of the foregoing, except to the extent such a prohibition is not permitted at law, any dispute between you and LG shall not under any circumstances proceed as part of a class or representative action. Instead of arbitration, either party may bring an individual action in small claims court, but that small claims court action may not be brought on a class or representative basis except to the extent this prohibition is not permitted at law in your province or territory of jurisdiction as it relates to the claims at issue between you and LG. This does not apply to consumers in Ontario and Québec. In accordance with provincial legislation, the consumer and LG may agree to resolve the dispute using any procedure available, including commencing the action before the competent courts of those provinces.

Arbitration Rules and Procedures. To begin arbitration of a claim, either you or LG must make a written demand for arbitration. The arbitration will be private and confidential, and conducted on a simplified and expedited basis before a single arbitrator chosen by the parties under the provincial or territorial commercial arbitration law and rules of the province or territory of your residence. You must also send a copy of your written demand to LG at LG Electronics, Canada, Inc., Attn: Legal Department- Arbitration, 20 Norelco Drive, North York, Ontario M9L 2X6. This arbitration provision is governed by your applicable provincial or territorial commercial arbitration legislation. For consumers in Ontario and Québec , the applicable arbitration legislation only applies if consumers agree to submit the dispute to arbitration. Judgment may be entered on the arbitrator's award in any court of competent jurisdiction. All issues are for the arbitrator to decide, except that, issues relating to the scope and enforceability of the arbitration provision and to the arbitrability of the dispute are for the court to decide. The arbitrator is bound by the terms of this provision.

Governing Law. The law of the province or territory of your purchase shall govern this Limited Warranty and any disputes between you and LG except to the extent that such law is preempted by or inconsistent with applicable federal or provincial/territorial law. Should arbitration not be permitted for any claim, action, dispute or controversy between you and LG, you and LG attorn to the exclusive jurisdiction of the courts of the province or territory of your purchase for the resolution of the claim, action, dispute or controversy between you and LG.

Fees/Costs. You do not need to pay any fee to begin an arbitration. Upon receipt of your written demand for arbitration, LG will promptly pay all arbitration filing fees unless you seek more than $25,000 in damages, in which case the payment of these fees will be governed by the applicable arbitration rules. Except as otherwise provided for herein, LG will pay all filing, administration and arbitrator fees for any arbitration initiated in accordance with the applicable arbitration rules and this arbitration provision. If you prevail in the arbitration, LG will pay your attorneys' fees and expenses as long as they are reasonable, by considering factors including, but not limited to, the purchase amount and claim amount. Notwithstanding the foregoing, if applicable law allows for an award of reasonable attorneys' fees and expenses, an arbitrator can award them to the same extent that a court would. If the arbitrator finds either the substance of your claim or the relief sought in the demand is frivolous or brought for an improper purpose (as measured by the applicable laws), then the payment of all arbitration fees will be governed by the applicable arbitration rules. In such a situation, you agree to reimburse LG for all monies previously disbursed by it that are otherwise your obligation to pay under the applicable arbitration rules. Except as otherwise provided for, LG waives any rights it may have to seek attorneys' fees and expenses from you if LG prevails in the arbitration.

Hearings and Location. If your claim is for $25,000 or less, you may choose to have the arbitration conducted solely (1) on the basis of documents submitted to the arbitrator, (2) through a telephonic hearing, or (3) by an in-person hearing as established by the applicable arbitration rules. If your claim exceeds $25,000, the right to a hearing will be determined by the applicable arbitration rules. Any in-person arbitration hearings will be held at the nearest, most mutually-convenient arbitration location available within the province or territory in which you reside unless you and LG both agree to another location or agree to a telephonic arbitration.

Severability and Waiver. If any portion of this Limited Warranty (including these arbitration procedures) is unenforceable, the remaining provisions will continue in full force and effect to the maximum extent permitted by applicable law. Should LG fail to enforce strict performance of any provision of this Limited Warranty (including these arbitration procedures), it does not mean that LG intends to waive or has waived any provision or part of this Limited Warranty.

Opt Out. The arbitration provision requires you and LG to resolve disputes by binding arbitration instead of court, unless the laws of your province or territory do not permit that, or, in other jurisdictions, if you choose to opt out. The arbitration provision does not apply to consumers in Ontario and Québec.

For individuals that fall within the binding arbitration provisions, you may opt out of this dispute resolution procedure. If you opt out, neither you nor LG can require the other to participate in an arbitration proceeding. To opt out, you must send notice to LG no later than 30 calendar days from the date of the first consumer purchaser's purchase of the product by either (i) sending an e-mail to optout@lge.com, with the subject line: "Arbitration Opt Out;" or (ii) calling 1- 800-980-2973. You must include in the opt out e-mail or provide by telephone: (a) your name and address; (b) the date on which the product was purchased; (c) the product model name or model number; and (d) the serial number (the serial number can be found (i) on the product; or (ii) online by accessing https://www.lg.com/ca_en/findmodel_serial/).

In the event that you "Opt Out", the law of the province or territory of your residence shall govern this Limited Warranty and any disputes between you and LG except to the extent that such law is preempted by or inconsistent with applicable federal or provincial/territorial law. Should arbitration not be permitted for any claim, action, dispute or controversy between you and LG, you and LG agree to attorn to the exclusive jurisdiction of the courts of the province or territory of your residence for the resolution of the claim, action, dispute or controversy between you and LG.

You may only opt out of the dispute resolution procedure in the manner described above (that is, by e-mail or telephone); no other form of notice will be effective to opt out of this dispute resolution procedure. Opting out of this dispute resolution procedure will not affect the coverage of the Limited Warranty in any way, and you will continue to enjoy the full benefits of the Limited Warranty. If you keep this product and do not opt out, then you accept all terms and conditions of the arbitration provision described above.

Conflict of Terms. In the event of a conflict or inconsistency between the terms of this Limited Warranty and the End User License Agreement ("EULA") in regards to dispute resolution, the terms of this Limited Warranty shall control and govern the rights and obligations of the parties and shall take precedence over the EULA.



US	Please call the installing contractor of your product, as warranty service will be provided by them.
CANADA	Service call Number ⌗ : (888) LG Canada, (888) 542-2623 Numéro pour les appels de service : LG Canada, 1-888-542-2623