Scan the QR code to see the manual.

OWNER'S MANUAL

WASHING MACHINE

Before beginning installation, read these instructions carefully. This will simplify installation and ensure that the product is installed correctly and safely. Leave these instructions near the product after installation for future reference.

ENGLISH

WT25WT6HK / WT25VT6HK / WT25MT6HK / WT22WT6HK / WT22VT6HK / WT22MT6HK / WT25OBT6HK

NOM

www.lg.com

MFL68267096
Rev.09_030326

Copyright © 2020-2026 LG Electronics. All Rights Reserved

TABLE OF CONTENTS

This manual may contain images or content that may be different from the model you purchased.

This manual is subject to revision by the manufacturer.

SAFETY INSTRUCTIONS

READ ALL INSTRUCTIONS BEFORE USE 3
WARNING 3
CARING FOR THE ENVIRONMENT 8

INSTALLATION

Parts and Specifications 9
Installation Place Requirements 11
Connecting the Water Inlet Hoses 12
Installing the Drain Hose 13
Levelling the Appliance 14

OPERATION

Operation Overview 16
Preparing the Wash Load 16
Adding Detergents, Softeners and Bleaches 18
Control Panel 20
Programme Table 22
Extra Options and Functions 25

SMART FUNCTIONS

LG ThinQ Application 29
Smart Diagnosis 29

MAINTENANCE

Cleaning after Every Wash 30
Cleaning the Appliance Periodically 30

TROUBLESHOOTING

Before Calling for Service 32

SAFETY INSTRUCTIONS

READ ALL INSTRUCTIONS BEFORE USE

The following safety guidelines are intended to prevent unforeseen risks or damage from unsafe or incorrect operation of the appliance.

The guidelines are separated into 'WARNING' and 'CAUTION' as described below.

Safety Messages

⚠ This symbol is displayed to indicate matters and operations that can cause risk. Read the part with this symbol carefully and follow the instructions in order to avoid risk.

⚠ **WARNING**
This indicates that the failure to follow the instructions can cause serious injury or death.

⚠ **CAUTION**
This indicates that the failure to follow the instructions can cause minor injury or damage to the product.

WARNING

⚠ WARNING

To reduce the risk of explosion, fire, death, electric shock, injury or scalding to persons when using this product, follow basic precautions, including the following:

Technical Safety

- This appliance is not intended for use by persons (including children) with reduced physical, sensory or mental capabilities, or lack of experience and knowledge, unless they have been given supervision or instruction concerning use of the appliance by a person responsible for their safety.

- Children should be supervised to ensure that they do not play with the appliance.
- Cleaning and user maintenance shall not be made by children without supervision.
- If the power cord is damaged, it must be replaced by the manufacturer, its service agent or similarly qualified persons in order to avoid a hazard.
- Ventilation openings must not be obstructed by a carpet.
- This appliance is intended to be used in household only.
- Use a new hose or hose-set supplied with the appliance. Reusing old hoses can cause a water leak and subsequent property damage.
- The inlet water pressure must be between 50 and 800 kPa.

Maximum Capacity

The maximum capacity in some cycles for dry clothes to be washed is:

WT25WT6HK / WT25VT6HK / WT25MT6HK / WT25OBT6HK	WT22WT6HK / WT22VT6HK / WT22MT6HK
25 kg	22 kg

Installation

- Never attempt to operate the appliance if it is damaged, malfunctioning, partially disassembled, or has missing or broken parts, including a damaged cord or plug.
- This appliance should only be transported by two or more people holding the appliance securely.
- Do not install the appliance in a damp and dusty place. Do not install or store the appliance in any outdoor area, or any area that is subject to weathering conditions such as direct sunlight, wind, rain, or temperatures below freezing.
- Make sure the power plug is completely pushed into the power outlet.

- Do not plug the appliance into multiple outlet sockets or an extension power cable.
- Do not modify the power plug provided with the appliance. If it does not fit the power outlet, have a proper outlet installed by a qualified electrician.
- This appliance must be grounded. In the event of malfunction or breakdown, grounding will reduce the risk of electric shock by providing a path of least resistance for electric current.
- This appliance is equipped with a power cord having an equipment-grounding conductor and a grounding power plug. The power plug must be plugged into an appropriate outlet socket that is installed and grounded in accordance with all local codes and ordinances.
- Improper connection of the equipment-grounding conductor can result in risk of electric shock. Check with a qualified electrician or service personnel if you are in doubt as to whether the appliance is properly grounded.
- Tighten and secure the drain hose at connecting ends to avoid separation.
- For models with only one inlet water supply valve, do not connect to hot water. Connect to cold water only.

Operation

- Do not apply any sharp objects to the control panel in order to operate the appliance.
- Do not attempt to separate any panels or disassemble the appliance.
- Do not repair or replace any part of the appliance. All repairs and servicing must be performed by qualified service personnel unless specifically recommended in this Owner's Manual. Use only authorized factory parts.
- Do not put animals, such as pets into the appliance.
- Keep the area underneath and around the appliance free of combustible materials such as lint, paper, rags, chemicals, etc.
- Do not leave the appliance door open. Children may hang on the door or crawl inside the appliance, causing damage or injury.

- Do not put in, wash or dry articles that have been cleaned in, washed in, soaked in, or spotted with combustible or explosive substances (such as waxes, wax removers, oil, paint, gasoline, degreasers, drycleaning solvents, kerosene, petrol, spot removers, turpentine, vegetable oil, cooking oil, acetone, alcohol, etc.). Improper use can cause fire or explosion.
- Do not use or store flammable or combustible substances (ether, benzene, alcohol, chemical, LPG, combustible spray, insecticide, air freshener, cosmetics, etc.) near the appliance.
- Never reach into the appliance while it is operating. Wait until the drum has completely stopped.
- In case of a water leak from the appliance, disconnect the power plug and contact the LG Electronics customer information centre.
- Turn off water taps to relieve pressure on hoses and valves and to minimize leakage if a break or rupture should occur. Check the condition of the fill hoses; they may need replacement after 5 years.
- If there is a gas leakage (isobutane, propane, natural gas, etc.) within the home, do not touch the appliance or power plug and ventilate the area immediately.
- If the drain hose or inlet hose is frozen during winter, use it only after thawing.
- Keep all washing detergents, softener and bleach away from children.
- Do not touch the power plug or the appliance controls with wet hands.
- Do not bend the power cable excessively or place a heavy object on it.
- Do not put your hand, foot or anything under the appliance while the appliance is in operation.
- Avoid touching any water that is drained from the appliance during the wash.
- Make sure that drainage is working properly. If water is not drained properly, your floor may get flooded.

- If, during spinning, opening the door does not stop the drum within about 10 seconds, immediately discontinue operating the appliance and contact your dealer or LG Electronics service centre.
- Do not use a power outlet, wiring equipment and extension cord of which the electric capacity is lower than the appliance's rated capacity.
- When the air temperature is high and the water temperature is low, condensation may occur and thus wet the floor.
- Wipe off dirt or dust on the contacts of the power plug.

Maintenance

- Disconnect the appliance from the power supply before cleaning the appliance. Setting the controls to the OFF or stand by position does not disconnect this appliance from the power supply.
- Securely plug the power plug in the outlet socket after completely removing any moisture and dust.
- Do not spray water inside or outside the appliance to clean it.
- Never unplug the appliance by pulling on the power cable. Always grip the power plug firmly and pull straight out from the outlet socket.
- Only qualified service personnel from LG Electronics service centre should disassemble, repair, or modify the appliance. Contact an LG Electronics customer information centre if you move and install the appliance in a different location.

Disposal

- Before discarding an old appliance, unplug it. Cut off the cable directly behind the appliance to prevent misuse.
- Dispose of all packaging materials (such as plastic bags and styrofoam) away from children. The packaging materials can cause suffocation.
- Remove the door before disposing of or discarding this appliance to avoid the danger of children or small animals getting trapped inside.

CARING FOR THE ENVIRONMENT

Disposal of Your Old Appliance

- This crossed-out wheeled bin symbol indicates that waste electrical and electronic products (WEEE) should be disposed of separately from the municipal waste stream.
- Old electrical products can contain hazardous substances so correct disposal of your old appliance will help prevent potential negative consequences for the environment and human health. Your old appliance may contain reusable parts that could be used to repair other products, and other valuable materials that can be recycled to conserve limited resources.
- You can take your appliance to any of the authorised centres for collection. If you want to know an updated list of countries that have this service, visit the page https://www.lg.com/global/take-back-recycling-global-network-south-america.

INSTALLATION

Parts and Specifications

NOTE

- Appearance and specifications may change without notice to improve the quality of the appliance.

Front View

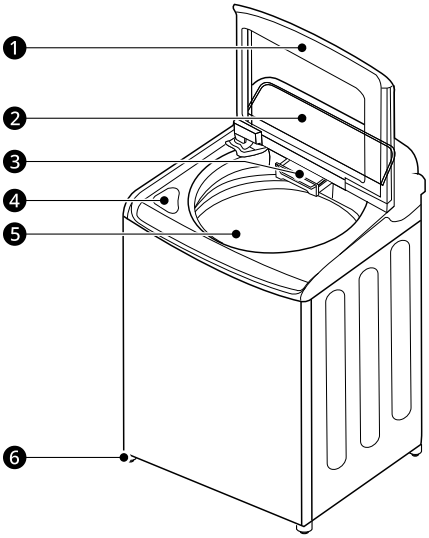

❶ Door

❷ Control Panel

❸ Dispenser Drawer

❹ Bleach Dispenser

❺ Drum

❻ Levelling Feet

Rear View

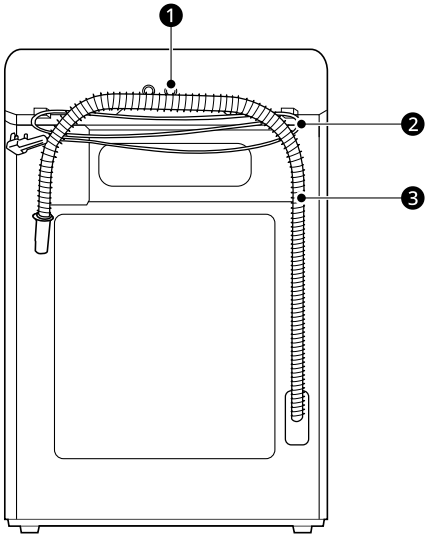

❶ Hot and Cold Water Inlets

❷ Power Cord

❸ Drain Hose*1

*1 This feature is only available on some models.

Accessories

*1 The included accessories vary depending on the model you purchased.

*2 This accessory is not included in the product, but you can purchase it from the LG service centre.

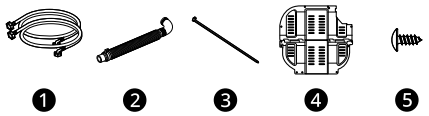

❶ Cold and Hot Water Inlet Hoses*1

❷ Drain Hose*1

❸ Tie Strap*1

❹ Anti-Rat Cover*2

❺ Screw for Anti-Rat Cover*2

Specifications

Model	WT25WT6HK / WT25VT6HK / WT25MT6HK / WT25OBT6HK	WT22WT6HK / WT22VT6HK / WT22MT6HK
Power Supply	120 V~, 60 Hz	
Product Weight	Approx. 58 kg	Approx. 56 kg
Rate Input	700 W	

Dimension(mm)

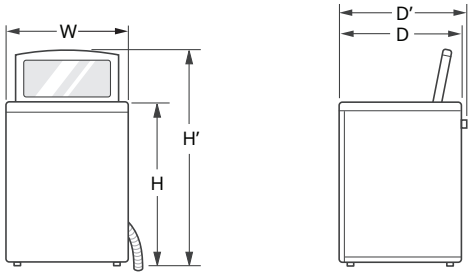

W	690	D	730	H	1 130
D'	760	H'	1 460		

Installation Place Requirements

Before installing the appliance, check the following information in order to install the appliance in a correct place.

Unpacking Shipping Material

1 Lift the appliance off of the foam base.

- After removing the carton and shipping material, lift the appliance off the foam base.
- Make sure the plastic tub support ❶ comes off with the base and is not stuck to the bottom of the appliance.
- If you must lay the appliance down to remove the carton base ❷, always protect the side of the appliance and lay it carefully on its side. Do not lay the appliance on its front or back.

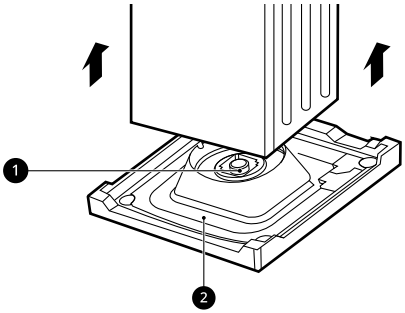

NOTE

- Do not use the appliance on carton base ❷. Doing so may damage the appliance.

2 Remove the foam tub insert.

- To prevent damage, do not remove the foam insert ❸ from the tub until the appliance is in the final location.

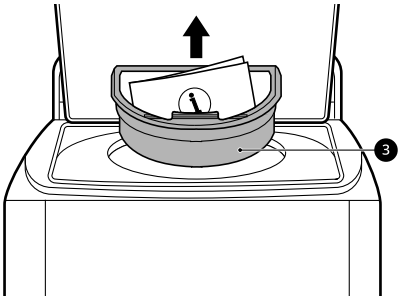

NOTE

- Once removed, save the foam insert for future use. If the appliance needs to be moved, the foam insert will help prevent damage during transportation.

3 Unfasten the power cord.

- Unfasten the power cord from the back of the appliance.

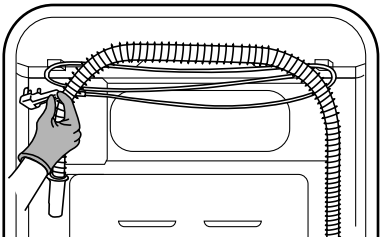

Installation Location

- Install the appliance on a flat floor of hard material that is strong enough to support a fully loaded appliance. (Allowable slope under the appliance: 1°)
- Never try to level any uneven floor by putting pieces of wood, cardboard or similar materials under the appliance.

- If it is impossible to avoid positioning the appliance next to a gas cooker or coal burning stove, an insulation (85 X 60 cm) covered with aluminium foil on the side facing the cooker or stove must be inserted between the two appliances.
- Ensure that when the appliance is installed, it is easily accessible for a service technician in the event of a breakdown.
- Additional clearance for the wall should have **10 cm** for the rear and **2 cm** for right and left side.

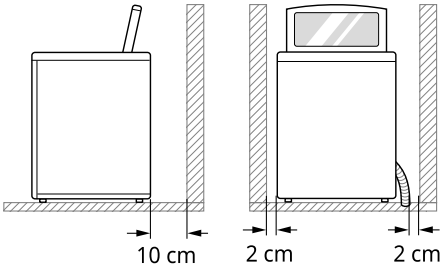

⚠ WARNING

- This appliance must only be used for domestic household purposes and should not be used with movable home or house.

NOTE

- Do not install this appliance on a raised surface or platform, plinth or stand. It may cause injury or serious malfunctioning.

Ventilation

- Make sure that air circulation around the appliance is not impeded by carpets, rugs, etc.

Ambient Temperature

- Do not install the appliance in rooms where freezing temperatures may occur. Frozen hoses may burst under pressure. The reliability of the electronic control unit may be impaired at temperatures below freezing point.
- If the appliance is delivered in winter and temperatures are below freezing, place the appliance at room temperature for a few hours before putting it into operation.

Electrical Connection

- Do not use an extension cord or double adapter.
- Always unplug the appliance and turn off the water supply after use.
- Connect the appliance to an earthed socket in accordance with current wiring regulations.
- The appliance must be positioned so that the plug is easily accessible.
- Power outlet must be within 1.5 meters of either side of the appliance.

⚠ WARNING

- Repairs to the appliance must only be carried out by qualified personnel. Repairs carried out by inexperienced persons may cause injury or serious malfunctioning. Contact your local authorised LG repairer.
- The power plug must be plugged into an appropriate outlet socket that is installed and grounded/earthed in accordance with all local codes and ordinances.

Connecting the Water Inlet Hoses

Before connecting the water inlet hose to the water tap, check the hose fitting type and follow the instructions for that hose fitting.

Note for Connection

- Water supply pressure must be between **50 kPa** and **800 kPa** (0.5 - 8.0 kgf / cm^2). If the water supply pressure is more than **800 kPa**, a pressure reducing device should be installed.
- Do not overtighten the water inlet hose when connecting it to the valve.
- Periodically check the condition of the hose and replace the hose if necessary.

- The water supply hose supplied may vary from country to country. Make sure to connect the blue supply hose to the COLD water tap, and the orange supply hose to the HOT water tap.

Checking the Rubber Seals

Two rubber seals ❶ are supplied with the water inlet hoses. They are used to prevent leaks when the connections to the taps are properly tightened. Do not over tighten connections.

- Do not use mechanical devices such as multi grips to tighten the inlet hoses. Ensure that the curved end of the water inlet hose is connected to the appliance.

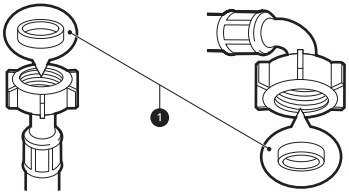

Connecting the Hose to the Water Tap

Connecting Screw-Type Hose to Tap with Thread
Screw the hose connector onto the water supply tap.

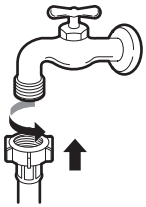

NOTE

- After connecting the water inlet hose to the water tap, turn on the water tap to flush out foreign substances (dirt, sand, sawdust, and etc.) in the water lines. Let the water drain into a bucket, and check the water temperature.

Connecting the Hose to the Appliance

Screw the water inlet hose to the water inlet valve on the back of the appliance.

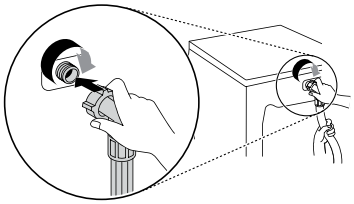

- On models with only one water inlet, do not connect the hose to the hot water supply. Connect to the cold water supply only.

NOTE

- After completing the connections, check for leaks and tighten or reassemble the connections if needed.
- For model with both hot and cold water inlet, it is recommended to connect both hot and cold water inlet hoses. Connecting only one hose may cause IE error.

Installing the Drain Hose

Before connecting the drain hose, check your drain hose model and follow the instructions for that model.

For Models with Drain Pump

The discharge height should be approximately **90 - 120 cm** from the floor.

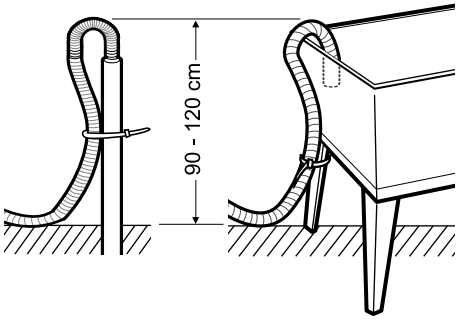

- Securing the drain hose correctly will protect the floor from damage due to water leakage.
- If the drain hose is too long, do not force the drain hose further into the drain outlet. This will cause abnormal noise.

NOTE

- The drain hose must not be placed higher than **120 cm** above the floor. Water in the appliance may not drain or may drain slowly.

Levelling the Appliance

Checking the Level

Levelling the appliance prevents unnecessary noise and vibration. Check whether the appliance is perfectly level after installation.

- If the appliance rocks when pushing the top plate of the appliance diagonally, adjust the feet again.

Adjusting and Levelling the Feet

When the appliance is not perfectly level, turn the adjustable feet until the appliance no longer wobbles.

- Turn the adjustable feet clockwise to raise or turn the adjustable feet counterclockwise to lower the appliance.

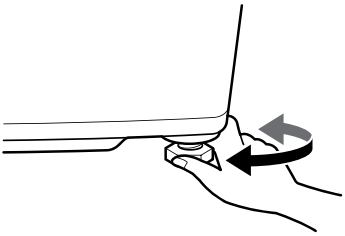

NOTE

- Do not insert pieces of wood etc. under the feet.
- Timber or suspended type flooring will contribute to excessive vibration and unbalance. Reinforcing or bracing the timber floor may be need to stop or reduce excessive noise and vibration.
- Do not install the appliance on any elevated surface or platform, as it may become unstable and cause serious injury and damage.
- If the appliance is installed on a uneven, weak or tilted floor causing excessive vibration, spin failure or UE error can occur. It must be placed on a firm and level floor to prevent spin failure.

Assembling the Anti-Rat Cover

You can insert the anti-rat cover according to the type to protect the appliance from the rat.

Folding Type

1 Lay the appliance backwards.

⚠ CAUTION

- Be careful your feet or hands when you lay or raise the appliance.

2 Remove the sponge attached on the base.

3 Insert the 7 screws ❶ into the holes to assemble the anti-rat cover to the appliance.

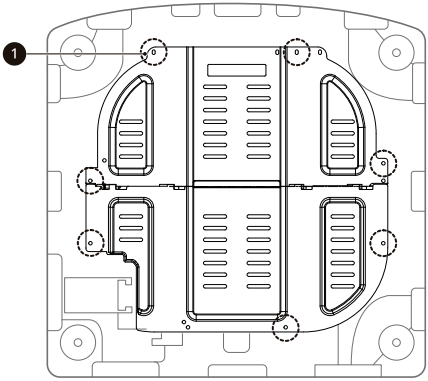

OPERATION

Operation Overview

Using the Appliance

Before the first wash, select the **Normal** programme and add a half amount of detergent. Start the appliance without clothes.

- This will remove residue and water from the drum that may have been left during manufacturing.

1 Sort clothes and load items.

- Sort clothes by fabric type, soil level, colour and item size as needed. Open the door and load items into the appliance.

2 Add detergent, fabric softener and/or bleach.

- Add the proper amount of detergent to the detergent dispenser drawer. If desired, add bleach or fabric softener to the appropriate areas of the dispenser.

3 Turn on the appliance.

- Press the **POWER** button to turn on the appliance.

4 Choose the desired wash cycle.

- Turn the programme knob to select the desired programme.
- Select the option button to adjust wash temperature, spin speed, etc. Refer to a fabric care label of your clothes for any warning or special instructions.

5 Begin cycle.

- Press the **START/PAUSE** button to begin the cycle.
- The appliance will agitate briefly without water to measure the weight of the clothes.
- If the **START/PAUSE** button is not pressed within a certain time, the appliance will shut off and all settings will be lost.

6 End of cycle.

- When the cycle is finished, a melody will sound. Immediately remove your clothing from the appliance to reduce wrinkling.

Preparing the Wash Load

Sort the wash load for best washing results, and then prepare the clothes according to the symbols on their care labels.

Sorting the Clothes

- For best washing results, sort your clothes according to a care label stating fabric type and washing temperature. Adjust the spin speed to wash them.
- Soil level (Heavy, Normal, Light): Separate clothes according to soil level. If possible, do not wash heavily soiled items with lightly soiled ones.
- Colour (White, Lights, Darks): Wash separately dark or dyed clothes from whites or light colours. Mixing dyed clothes with light clothes can result in dye transfer or discolouration of lighter clothes.
- Lint (Lint producers, Collectors): Wash separately lint producing fabrics from lint collecting fabrics. Lint producers can result in pilling and linting on the lint collectors.

Checking the Fabric Care Label

This will tell you about the fabric content of your clothes and how it should be washed.

Symbols on the Care Labels

Symbol	Wash / Fabric type
	• Normal Wash • Cotton, Mixed Fabrics
	• Easy Care • Synthetic, Mixed Fabrics
	• Special Delicate Wash • Delicates
	• Hand Wash Only • Wool, Silk
	• Do not wash

NOTE

- The dashes under the symbol give you information about the type of fabric and the maximum allowance of mechanical stress.

Checking the Laundry before Loading

- Combine large and small items in a load. Load large items first. Large items should not be more than half of total load.
- Do not wash single small items. Add 1 - 2 similar items to the load to prevent an out-of-balance load.
- Make sure to empty all pockets. Items such as hair clips, lighters, pens, coins and keys can cause irreparable damage to both your appliance and clothes.

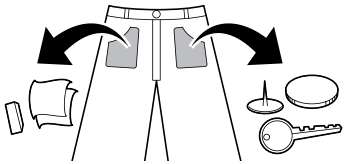

- Wash delicates (stockings, underwired bras) in a wash net.
- Close zippers, hooks and strings to make sure that these items do not snag other clothes.
- Pre-treat dirt and stains by saturating the dirt and stains with dissolved detergent and brushing them in order to remove dirt.

⚠ CAUTION

- Do not wash or spin any item labelled or known to be water-proof or water-resistant, even if the product care label on the item permits machine washing. Failure to follow these instructions could result in severe damage to your washing load, your appliance and/or property damage as a result of abnormal load friction or vibration of the appliance.
  - Examples of water-proof or water-resistant items include certain mattress pads, mattress covers, rain gear, camping gear, skiing apparel, outdoor gear and similar items.

Adding Detergents, Softeners and Bleaches

Detergent Dosage

- Detergent should be selected according to fabric type, colour, soil level and washing temperature and should be used according to the detergent manufacturer's instructions.
- Too much detergent results in excessive suds which cause poor washing.
- When you use liquid detergent, follow the guidelines provided by the detergent manufacturer.
- You can pour liquid detergent directly into the main detergent drawer if you are starting the wash cycle immediately. It is also recommended that it be added into the drum when loading the clothes.
- Do not use liquid detergent if you are using delay or pre-wash function as the liquid may harden.
- Reduce the amount of detergent if too many suds are formed.
- Detergent usage may need to be adjusted for water temperature, water hardness, size and soil level of the laundry. For best results, avoid oversudsing.
- Refer to the label of the clothes, before choosing the detergent and water temperature.
- Use only suitable detergents for the respective type of clothing:
  - General powdered detergents for all types of fabric
  - Powdered detergents for delicate fabric
  - Liquid detergents for all types of fabric or designated detergents only for wool
- For better washing performance and whitening, use detergent that contains general powdered bleach.
- Detergent is dispensed from the dispenser at the beginning of the cycle.
- Dilute liquid detergent with water, pour into the drum and start the cycle.

⚠ CAUTION

- Using liquid detergent without diluting, or leaving laundry for a long time after pouring diluted liquid detergent into the drum might cause the clothes to be damaged, bleached, discoloured.

NOTE

- Do not let the detergent harden. Doing so may lead to blockages, poor rinse performance or odour.
- Full load: According to manufacturer's recommendation.
- Part load: 3/4 of the normal amount
- Minimum load: 1/2 of full load

Adding Detergents

- Add the measured amount of detergent into the detergent compartment ❶.

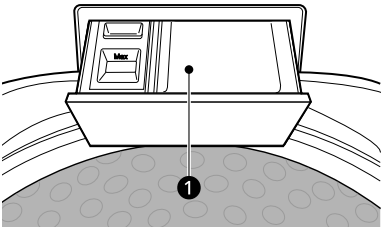

- Use more detergent if you have hard water, large items, greasy or oily soils or lower water temperature.
- Soap flakes or granulated soap powders should not be used in the appliance. When washing woollens, remember to use detergent suitable for washing woollens.

NOTE

- Use the appropriate amount of detergent. Too much detergent, bleach or softener may cause an overflow or a malfunction.

Adding Fabric Softeners

Add a fabric softener to the maximum fill line.

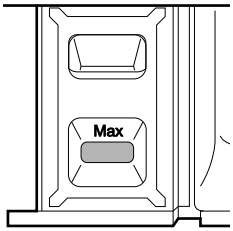

- If the softener is concentrated, then it should be diluted.
- Close the dispenser drawer gently.
- Do not leave the fabric softener in the detergent drawer for more than 2 days. Fabric softener may harden.
- Softener will automatically be added during the last rinse of the cycle.
- Do not open the drawer when water is being supplied.
- When use a fabric softener, follow the guidelines provided by the softener manufacturer.

NOTE

- Use only liquid softener and do not mix softener and detergent.
- Pouring excessive fabric softener over the maximum fill line can cause it to dispense too early, which may stain clothes.
- Do not pour fabric softener directly onto the laundry, doing so will cause staining on the clothes that will be difficult to remove.
- Solvents (benzene, etc.) must never be used.

Adding Liquid Bleaches

- Before starting the appliance, pour the measured amount of bleach directly into the bleach dispenser ❶. Avoid splashing or overfilling.

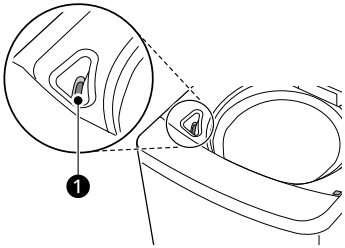

- Mix powdered bleach with water to a liquid consistency and pour it into the bleach dispenser.
- Check clothing care label for special instructions and separate the laundry to be bleached.
- Dilute liquid chlorine bleach with water.
- Measure the recommended amount of liquid bleach carefully according to instructions on the bottle.

⚠ CAUTION

- Never pour undiluted liquid bleach directly onto laundry or into the wash basket. This may cause change of colour or damage to the laundry.
- Do not pour powdered bleach into the bleach dispenser. Powdered bleach may harden, so it will block the bleach dispenser.

Control Panel

Control Panel Features

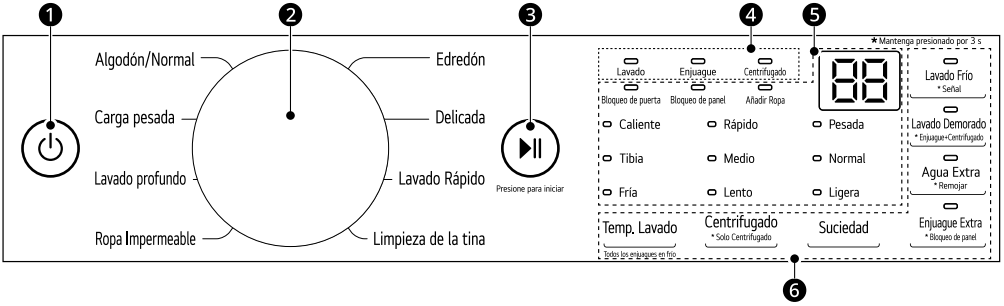

❶ **POWER Button**

- Press the **POWER** button to turn on or off the appliance.
- The appliance automatically turns off once a certain time has passed after the wash has completed.

❷ **Programme Knob**

- Programmes are available according to the laundry type.
- The lamp will light up to indicate the selected programme.

❸ **START/PAUSE Button**

- Press the **START/PAUSE** button to start or pause a wash cycle.
- Press the **START/PAUSE** button to stop a wash cycle temporarily.

NOTE

- If the wash is not recommenced within **60 minutes** when in pause, then the appliance will automatically turn off.
- For customer safety, the door will be locked automatically during operation. If there is additional laundry to put in, press **START/PAUSE** to unlock.

❹ **Cycle Status Indicator**

- The cycle status indicator is turned on before the start.
- The cycle status indicator blinks during that process, and then the indicator turns off when that process has completed.

❺ **Display**

- The display shows the settings, remaining estimated time, options, and status messages. When the appliance is turned on, the default settings in the display will light up.
- 88 : When a programme is selected, the default time for that programme is displayed. The time can change as options are selected.
  - If the display shows --, then the time will be displayed after the load sensing has detected the laundry size.

- The time shown is only an estimate. Several external factors (laundry size, room temperature, incoming water temperature, etc.) can affect the actual time.

❻ Extra Options and Functions

- You can use the extra options and functions to customize the programmes.

Programme Table

Washing Programme

Wash programmes are designed for the best wash performance for different types of clothes.

- Turn the programme knob to select the desired programme.
- When you select a wash programme, the light for the corresponding wash programme will turn on.

Normal	
Description	Use this programme to wash normal clothes. The built-in sensor detects the weight of the clothes, calculating wash, rinse and, spin settings accordingly. • If water or wet clothes is already in the drum before the start, the water level will be increased. • For lightweight and bulky items, the water level may be too low. Increase the water level manually.

Heavy Duty	
Description	Suitable for washing heavily soiled clothes, such as cotton fabrics,using more powerful wash motions. • When washing large loads, there will be brief periods of 2 minutes or more without agitation. These soak periods are part of the programme’s design, and are normal.

Deep Wash	
Description	Provides additional water and washes heavily soiled mixed items, except delicate fabrics • This programme's recommended laundry amount is under **3.0 kg**.

Waterproof	
Description	Suitable for washing waterproof items such as water resistant clothing, mattress covers, outdoor clothes, and plastic mats. (less than **6 kg**) **NOTE** • Check the fabric care label on the garments before using this programme. • Do not use any other wash programme to wash waterproof items. • Do not use this programme to wash a mixed load of waterproof and non-waterproof items. • Do not wash other fabrics using this programme.

Duvet	
Description	Use this programme to wash a blanket or bedclothes that have the hand wash sign on the care label. • This programme's recommended clothes amount is under **5 kg**. • Cashmere bedclothes, acrylic blanket, mixed spinning blanket, woollen blanket, infilling (polyester 101), and bed sheets might be damaged if they are allowed to float. It is recommended to purchase a separate laundry net to wash. • Separate bed clothes from general clothes. It might cause laundry to be unbalanced, which results in abnormal washing. • Spin dry might take longer to redistribute the laundry evenly if bedclothes are lumped to a side. • Never wash an electric blanket, carpets, rugs, pet accessories, soft toys or shoes. It can cause damage to the appliance and other items in the wash. • Put bedclothes into a laundry net and then soak and sink them in water so that they are less likely to float. If the items float during the wash or spin, it may damage the appliance and the clothes. • Regardless of size, we recommend washing bedclothes individually. If two bedclothes with different materials are washed at the same time, it might cause a spin malfunction due to imbalance. **⚠ CAUTION** • When putting a blanket into the drum, do not load it over the maximum line ❶. The blanket must also be submerged in the water. Failure to do so or overloading the blanket in the appliance will result in damage to the wash load and the appliance. 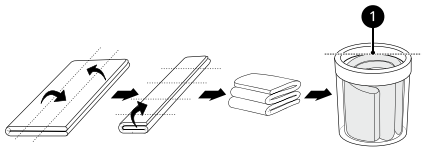

Delicates	
Description	Use this programme to wash delicate fabrics such as lingerie and woolens. Before washing, check the care label for the washing instructions. • This programme uses a slow spin to extract water from clothes, so the clothes has more moisture than normal. **NOTE** • Hang or lay your delicates flat when you dry them. • Only cold water will be used for this programme as hot water may damage clothes.

Speed Wash	
Description	Use this option to quickly wash lightly soiled clothing and small loads.For high wash and rinse efficiency, wash small loads of 2-3 lightly soiled garments. **NOTE** • Use very little detergent in this cycle. To add an extra rinse, use the **Extra Rinse** button

Tub Clean	
Description	This is a special function to clean inside the drum of your appliance. • To use this function, refer to the **MAINTENANCE** for details.

Extra Options and Functions

You can use the extra options and functions on some programmes to customize the cycle.

Customizing a Washing Programme

Each programme has default settings that are selected automatically. You may also customize these settings using these buttons.

Temp.
This button selects the wash temperature for the selected programme.

Press the **Temp.** button until the desired setting is lit.

- Select the water temperature suitable for the type of load you are washing. Follow the garment fabric care labels for best results.

Spin
The spin intensity level can be selected by pressing this button repeatedly.

Press the **Spin** button to select spin speed.

Soil
Press the **Soil** button repeatedly until the desired soil level is selected.

- **[Heavy]**: for normal and heavily soiled clothes
- **[Normal]**: for normal soiled clothes
- **[Light]**: for lightly soiled clothes

NOTE

- Selectable options will differ depending on the selected programme.

Only Using a Spin Function

This option spins the load without a wash or rinse cycle. This is useful for spinning dry hand-washables.

1 Prepare the clothes and load the drum.

2 Press the **Power** button.

- Do not select a washing programme and do not add a detergent.

3 Press the **Spin** button for 3 seconds.

4 Press the **Start/Pause** button.

NOTE

- If you select the washing programme, you will be unable to select a spin only. If this occurs, press **Power** button twice to cycle the machine off and back on.

Using Special Options

Water Plus
Use this option to add extra water to the wash cycle for better wash performance with large or bulky items.Use this option to add extra water to the wash cycle for better wash performance with large or bulky items.

NOTE

- If the washer reaches its maximum water level, this button will have no effect.
- To add more water while a cycle is running, pause the cycle and select this option.
- Selecting the **Water Plus** option with the **Normal** cycle automatically changes the cycle to the **Deep Wash** cycle.

Soak
This option provides a 30-minute presoak prior to the start of the selected programme. Use this option to presoak garments to help remove difficult spots or stains on fabrics. At the end of the presoak time, the selected programme will begin with the same water used for soaking.

Extra Rinse
This option adds an extra rinse to the selected programme. Use this option to help ensure the removal of detergent or bleach residue from fabrics.

- Pressing the **Extra Rinse** button twice will add two additional rinses to the programme.
- If a liquid fabric softener is used, it is always dispensed in the final rinse.

NOTE

- You cannot select this option with the **Spin Only** option and **Tub Clean** programme.
- Selecting the **Extra Rinse** option with the **Normal** programme automatically changes the programme to the **Deep Wash** programme.

Using Basic Options

Cold Wash
Use this option to save energy by using cooler water while increasing the wash and rinse times to maintain wash performance.

- Wash time will increase up to several minutes with this option.
- Selecting this option increases the water supplied during rinsing. The water supplied during washing is not increased.
- For best wash results, only wash small loads (less than 3.7 kg) with this option.

Time Delay
Use this function to delay ending time. The appliance will start automatically and finish after a specified time interval.

1. Press the **POWER** button.
2. Select a washing programme.
3. Press the **Time Delay** button to set the required delay ending time.
4. Press the **START/PAUSE** button.

NOTE

- This function is the time to the end of the programme, not the start. The actual running time may vary due to water temperature, wash laundry and other factors.
- Each press of the button increases the delay time by 1 hour, for up to 19 hours.
- If the **START/PAUSE** button is not pressed to begin the delay time, the washer automatically turns off after a certain time and all cycle settings are lost.

Rinse+Spin
Select this option to rinse and spin a load separately from a regular cycle. This can be helpful in preventing fresh stains from setting in fabrics.

1. Press the **POWER** button to turn on the washer.
   - Do not select a cycle.
2. Press and hold the **Time Delay** button for 3 seconds.
   - You can change the spin speed by pressing the **Spin** button.
3. Press the **START/PAUSE** button to begin.

Add Item
You can use this option in order to add or remove clothes after the washing programme has started.

1. Press the **POWER** button.
2. Select a washing programme
3. Press the **START/PAUSE** button.
4. Open the door after it unlocks itself and add or remove necessary clothing items.
5. Close the door and press the **START/PAUSE** button.

Setting

Child Lock
Use **Child Lock** function to disable the controls. This function can prevent children from changing programmes or operating this appliance.

NOTE

- Once this function is set, all buttons are locked except the **POWER** button.
- When the controls are locked, CL and the remaining time are alternatively shown on the display during the wash while the child lock is engaged.
- Turning off the power will not reset this function. You must deactivate this function before you can access any other options and functions.

Locking the Control Panel

1 Turn on the power.

2 Press and hold the **Extra Rinse** button simultaneously for 3 seconds to activate this function.

Unlocking the Control Panel

1 Turn on the power.

2 Press and hold the **Extra Rinse** button simultaneously for 3 seconds to deactivate this function.
   - When this function is deactivated, a beeper will sound and the remaining time for the current cycle will reappear on the display.

Signal
The washing machine plays a melody when the washing programme is finished. The buttons make a sound each time they are pressed.

- Press the **Cold Wash** button to turn the sounds on or off.
- When no signal is heard, the signal is off. The signal can be turned on at any time as long as the washing machine is turned on.

Manual Washing

When you need a rinse and spin or spin only, these can be set manually.

	Rinse and Spin	Spin only
1	ⓘ or ⏻ Press the **POWER** button.	
2	Press the **Time Delay** button for 3 seconds.	Press the **Spin** button for 3 seconds.
3	Press the **Spin** button to adjust spin strength.	Press the **Spin** button to adjust spin strength.
4	Press the **START/PAUSE** button to start the cycle(s).	

NOTE

- When you set a washing cycle manually such as rinse only, wash only or wash and rinse, the water will not be drained out after the wash is completed. If you wish to drain the water, select a spin only cycle after the wash has completed.
- If a rinse only cycle is selected, the water supply begins after detecting the load and the cycle will start. However the water will still fill to the selected water level even if there is water already in the tub.

SMART FUNCTIONS

LG ThinQ Application

The **LG ThinQ** application allows you to communicate with the appliance using a smartphone.

LG ThinQ Application Features

Smart Diagnosis
This function provides useful information for diagnosing and solving issues with the appliance based on the pattern of use.

Installing the LG ThinQ Application

Search for the **LG ThinQ** application from the Google Play Store or Apple App Store on a smartphone. Follow instructions to download and install the application.

Smart Diagnosis

Use this feature to help you diagnose and solve problems with your appliance.

NOTE

- The feature may be subject to change without prior notice and may have a different form depending on where you are located.

Using Audible Diagnosis to Diagnose Issues

Follow the instructions below to use the audible diagnosis method.

- Launch the **LG ThinQ** application and select the **Smart Diagnosis** feature in the menu. Follow the instructions for audible diagnosis provided in the **LG ThinQ** application.

1 Press the **POWER** button to turn on the appliance.
   - Do not press any other buttons.

2 Place the mouthpiece of your smartphone close to the **POWER** button.

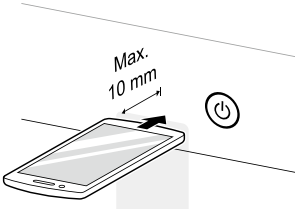

3 Press and hold the **Temp.** button for 3 seconds or longer while holding the smartphone mouthpiece to the **POWER** button until the data transfer is complete.
   - Keep the smartphone in place until the data transfer has finished. Time remaining for data transfer is displayed.

4 After the data transfer is complete, the diagnosis will be displayed in the application.

NOTE

- For best results, do not move the smartphone while the tones are being transmitted.

MAINTENANCE

⚠ WARNING

- Unplug the appliance before cleaning to avoid the risk of electric shock. Failure to follow this warning may result in serious injury, fire, electric shock, or death.
- Never use harsh chemicals, abrasive cleaners, or solvents to clean the appliance. They may damage the finish.

Cleaning after Every Wash

What to Clean

- If you always use cold water, we recommend that a warm or hot wash be used at regular intervals e.g. every 5th wash should be at least a warm one.
- Turn off taps after use to prevent the chance of flooding, otherwise an inlet hose may burst.
- Always unplug the power cord after use.
- After the cycle, wipe the door and inside the door to remove any moisture. Also wipe the inside of the tub thoroughly to prevent stains in the upper part of the tub.
- Clean around the bleach dispenser with water to flush any residual bleach from the dispenser opening as bleach can be corrosive if left undiluted.

⚠ WARNING

- Leave the door open to dry the drum interior but only if it is safe and any children are supervised.

Cleaning the Exterior

Proper care of the appliance can extend the service life.

Exterior

- Immediately wipe off any spills.
- Wipe with a damp cloth.
- Do not press on the surface or the display with sharp objects.

Dispenser Drawer

Detergent or fabric softener may build up in the dispenser drawer. Remove the drawer and inserts from the dispenser drawer and clean any buildup once or twice a month.

Cleaning the Appliance Periodically

Cleaning the Tub

This is a special function to help clean the inside of the appliance by soaking, washing, rinsing and spinning.

Run this function **once a month** (or more often if needed) to reduce build-up of detergent and softener and other residue.

- If there is a bad smell or mildew inside the appliance, run this function once a week for 3 weeks in addition to the regularly prompted intervals.

NOTE

- The tcL message will be displayed to alert to the recommendation of operating the **Tub Clean** function.
- If the tcL message is displayed on the appliance, or if it is selected after the completion of 30 wash cycles, the running time will increase up to 12 hours due to added soaking time.
- For models with a lint filter, remove lint or dirt from the inside of the lint filter before and after using this programme.

- For models without a lint filter, the lint is discharged when the water drains during washing.
- Washing small loads regularly (less than half a tub). This may result in stains being left on the edge of the tub that do not reach the top of the tub. To avoid stains at the top of the tub, wash larger amounts of laundry or use the **Tub Clean** function regularly.

1 Remove any clothing or items from the appliance.

2 Open the dispenser drawer and add anti-limescale to the main wash compartment.

⚠ WARNING

- Do not add any detergent to the detergent dispenser drawer for this function. Doing so may generate excessive suds and leak out from the appliance and cause damage to property.

3 Close the dispenser drawer slowly and close the door.

4 Press the **POWER** button.

5 Turn the knob or press the option button to select **Tub Clean**.

6 Press the **START/PAUSE** button to start.

7 Leave the door open to dry the inside of the appliance completely.
   - When the inside of the appliance is not dried completely, it may cause a bad smell or mildew.

⚠ WARNING

- Leave the door open to dry the drum interior but only if it is safe and any children are supervised.

Cleaning the Water Inlet Filter

Water inlet filter collects lime or any small objects that may be in water supplied to the appliance. Clean the water inlet filter regularly.

- Turn off the water taps to the appliance if the appliance is to be left for any length of time (e.g. holiday), especially if there is no floor drain (gully) in the immediate vicinity.
- IE error message will be displayed on the control panel when water is not entering the detergent drawer.
- If the water is very hard or contains traces of limescale, the filter on the water inlet may be clogged.

1 Turn off the power and the water tap and then unscrew the water inlet hose.

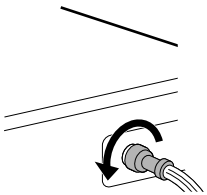

2 Remove the water inlet filter with small pliers and then clean the filter using a medium bristle tooth brush.

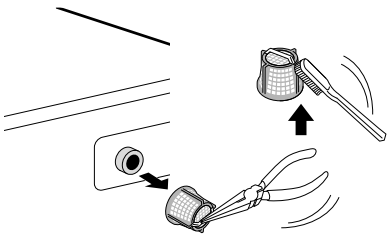

TROUBLESHOOTING

Before Calling for Service

Operation of the appliance can lead to errors and malfunctions. The following tables contain possible causes and notes for resolving an error message or malfunction. You can remedy most of the problems by yourself, consequently save time and money, since you do not need to call LG Electronics service centre. The following table should assist you by troubleshooting.

Error Messages

The appliance is equipped with an automatic error-monitoring system to detect and diagnose problems at an early stage. If this appliance does not function properly or does not function at all, check the following before you call LG Electronics service centre.

Symptoms	Possible Cause & Solution
dE **DOOR ERROR**	**The door is not closed properly.** • Close the door completely. If the error code is still displayed, call for service.
	The door is opened while the washing machine is operating. • Press **Start/Pause** to cancel the door error. Press **Start/Pause** again to start the washing programme.
dL **DOOR LOCK ERROR**	**Door is not locked properly.** • Check nothing is caught under the door, including shipping materials or clothing. • Close the door completely. If the error code is still displayed, call for service.
dr **DRAIN FEATURE**	**The appliance is paused during a cycle for a few minutes.** • The cycle will be cancelled and any water remaining in the drum will be drained.
IE **INLET ERROR**	**Water supply tap(s) are not completely open.** • Fully open tap.
	Water supply hose(s) are kinked, pinched, or crushed. • Straighten or reinstall the water supply hose(s).
	The filter of the supply hose(s) are clogged. • Check and clean the filter of the supply hose(s).
	Water supply pressure to tap or house is too low or too high. • Contact a plumber to have the water pressure checked or restored to the operating requirements.
	Water supply is connected with leak limiting hose(s). • Do not use leak limiting hose(s).

Symptoms	Possible Cause & Solution
LE 1 **FOREIGN OBJECTS ERROR**	**Foreign objects, such as coins, pins, clips, etc.,are caught between the pulsator and the inner drum.** • Turn off the appliance and then press the **POWER** button. Press the **Spin** button without selecting a cycle to drain and spin the laundry. When the spin is complete, remove the clothes and then find and remove any objects caught in the pulsator gap.
OE **WATER OUTLET ERROR**	**Drain hose is kinked, pinched, or clogged.** • Clean and straighten the drain hose.
	Drain discharge is more than 1.2 m above the bottom of the appliance. • Adjust the hose or reconfigure the drain pipe. Maximum drain height is 1.2 m.
UE **UNBALANCE ERROR**	**Rebalancing operation is not successful.** • The automatic attempt to rebalance the laundry was not successful. The cycle has been paused to allow the laundry to be manually adjusted.
	The load is too small. • Add more items to allow the appliance to balance the laundry.
	Heavy items are mixed with lighter items. • Wash items of somewhat similar weight.
	The load is out of balance. • Manually redistribute the laundry if laundry have become tangled.
tE **TEMPERATURE SENSOR ERROR**	**Control error.** • Unplug the appliance and wait 60 seconds. Reconnect power and try again. • If the error code is still displayed, call for service.
FE **OVERFLOW ERROR**	**Water overfills due to the faulty water valve.** • Close the water taps, unplug the appliance, and call for service.
PE **PRESSURE SENSOR ERROR**	**The water level sensor is not working correctly.** • Close the water taps, unplug the appliance, and call for service.
LE **MOTOR LOCKED ERROR**	**A motor error has occurred.** • Allow the appliance to stand for 30 minutes and then restart the cycle. • If the error code is still displayed, call for service.
AE **CLUTCH ERROR**	**Clutch error.** • Unplug the appliance and call for service.
tcL **TUB CLEAN ALARM**	**The programme has run more than 30 times.** • Run the **Tub Clean** function.

Symptoms	Possible Cause & Solution
E3 **DRAIN MOTOR ERROR**	**A motor error has occurred.** • Unplug the appliance and call for service.
CL **CHILD LOCK FUNCTION**	**CL is not an error. This prevents children from changing cycles or operating the appliance.** • Turn off the **Child Lock** function in the control panel.

Noises

Symptoms	Possible Cause & Solution
Rattling and clanking noise	**Foreign objects, such as keys, coins, or safety pins may be in the drum.** • Stop the appliance, check the drum for foreign objects. If noise continues after the appliance is restarted, call for service.
Thumping sound	**Heavy laundry may produce a thumping sound. This is usually normal.** • If the sound continues, the appliance is probably out of balance. Stop and redistribute the laundry.
	The laundry may be out of balance. • Pause the cycle and redistribute the laundry after the door unlocks.
Vibrating noise	**Packaging materials are not removed.** • Remove packing materials.
	The laundry may be unevenly distributed in the drum. • Pause the cycle and redistribute the laundry after the door unlocks.
	Not all levelling feet are resting firmly and evenly on the floor. • See the section **Levelling the Appliance** to adjust and level the feet.
	Floor is not rigid enough. • Check if the floor is solid and does not flex. See the section **Installation Place Requirements** to select the proper location.

Operation

Symptoms	Possible Cause & Solution
Appliance will not operate.	**Control panel has powered off due to inactivity.** • This is normal. Press the **POWER** button to turn on the appliance.
	Appliance is unplugged. • Make sure that the cord is plugged securely into a working outlet.

Symptoms	Possible Cause & Solution
Appliance will not operate.	**Water supply is turned off.** • Turn on the water supply tap completely.
	Controls are not set properly. • Make sure the cycle is correctly set. Close the door and press the **START/ PAUSE** button.
	Circuit breaker/fuse is tripped/blown. • Check house circuit breakers/fuses. Replace fuses or reset breaker. The appliance should be on a dedicated branch circuit. The appliance will resume the cycle where it stopped once power is restored.
	Control needs to be reset. • Press the **POWER** button, then reselect the desired programme and press the **START/PAUSE** button.
	START/PAUSE was not pressed after a cycle was set. • Press the **POWER** button, then reselect the desired cycle and press the **START/PAUSE** button. If the **START/PAUSE** button is not pressed within a certain time, the appliance will be turned off.
	Extremely low water pressure. • Check another tap in the house to make sure that household water pressure is adequate.
	Appliance is too cold. • If the appliance has been exposed to temperatures below freezing for an extended period of time, allow it to warm up before pressing the **POWER** button.
	Appliance is heating the water or making steam. (some models only) • The drum in the appliance may stop operating temporarily during certain cycles, while water is safely heated to a set temperature.
Detergent is not dispensed completely or not dispensed at all.	**Too much detergent is used.** • Follow the guidelines provided by the detergent manufacturer.
Water leaking	**Water inlet hose connection is loose at tap or appliance.** • Check hoses for leaks, cracks and splits. • Tighten hose connections.
	House drain pipes are clogged. • The appliance pumps out water very rapidly. Check for water backing up out of the drain pipe during drain. If water is seen coming out of the drain, check for proper drain hose installation and check for restrictions in the drain. Contact a plumber to repair drain pipe.

Symptoms	Possible Cause & Solution
Water leaking	**Drain hose has come out of drain or is not inserted far enough.** • Tie drain hose to supply hose or standpipe to prevent it from coming out during drain. For smaller drain pipes, insert the drain hose into the pipe as far as the drain hose flange. For larger drain pipes, insert the drain hose into the pipe 2.5 - 5 cm past the flange.
	A large item such as a pillow or blanket is above the top of the drum. • Stop the appliance and check the item. Make sure the item does not crest above the top edge of the drum.
Appliance is not filling properly.	**Filter is clogged.** • Make sure the inlet filters on the fill valves are not clogged.
	Supply hoses may be kinked. • Check that supply hoses are not kinked or clogged.
	Insufficient water supply. • Make sure that both hot and cold water taps are turned on all the way.
	Hot and cold supply hoses are reversed. • Check supply hose connections.
Appliance will not drain water.	**Drain hose is kinked.** • Ensure that the drain hose is not kinked.
	Drain is located higher than 1.2 m above the floor. • Make sure that the drain hose is no higher than 1.2 m above the bottom of the appliance.
Cycle time is longer than usual.	**The load is too small.** • Add more items to allow the appliance to balance the laundry.
	Heavy items are mixed with lighter items. • Always try to wash items of somewhat similar weight to allow the appliance to evenly distribute the weight of the laundry for spinning.
	The load is out of balance. • Manually redistribute the laundry if laundry have become tangled.

Performance

Symptoms	Possible Cause & Solution
Poor stain removal	**Proper options are not selected.** • Heavier soils and tougher stains may require extra cleaning power. Select the **Soak** option to boost the cleaning power of the selected cycle.

Symptoms	Possible Cause & Solution
Poor stain removal	**Previously set stains.** • Items that have previously been washed may have stains that have been set. These stains may be difficult to remove and may require hand washing or pretreating to aid in stain removal.
Staining	**Bleach or softener dispensed too soon.** • Dispenser compartment is overfilled causing bleach or softener to dispense immediately. ALWAYS measure bleach to prevent overfilling. • Close the dispenser drawer gently.
	Bleach or softener was added directly to the laundry in the drum. • Always use the dispensers to ensure that laundry products are properly dispensed at the right time in the cycle.
	Clothes were not properly sorted. • Always wash dark colours separately from light colours and whites to prevent discolouration. • Never wash heavily soiled items with lightly soiled items.
Wrinkling	**Appliance is not unloaded promptly.** • Always remove items from the appliance as soon as the cycle is complete.
	Appliance is overloaded. • The appliance can be fully loaded, but the drum should not be tightly packed with items. The door of the appliance should be closed easily.
	Hot and cold water supply hoses are reversed. • Hot water rinse can set wrinkles in clothes. Check the supply hose connections.
Musty or mildewy odour in the appliance	**Inside of drum was not cleaned properly.** • Run the **Tub Clean** function regularly.

Memo

Memo

LG