LG

MFL05813103260 5REV01

OLED55G6*
OLED65G6* OLED83G6*
OLED77G6* OLED97G6*





www.lg.com

PDF

x 1

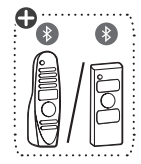

55”*A/65”*A
55”*W/65”*W
77/83/97”

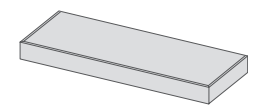

55/65/77/83”
X 1
97”
X 4



55”*S, 65”*S
55”*B, 65”*B

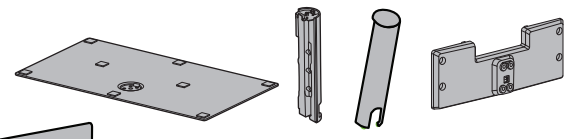

a x 4
(M4 x L20)

b x 8
(M5 x L14)

55/77”
65”*A/65”*W

1

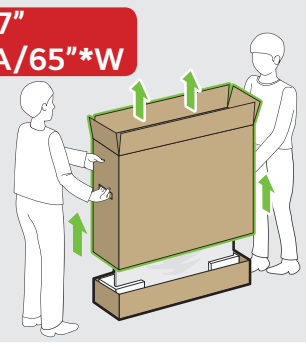

83/97”

1

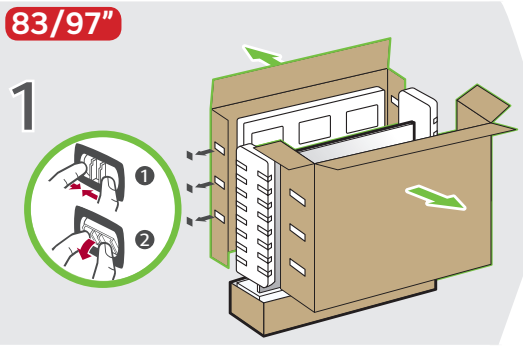

55/77/83/97”
65”*A/65”*W

2

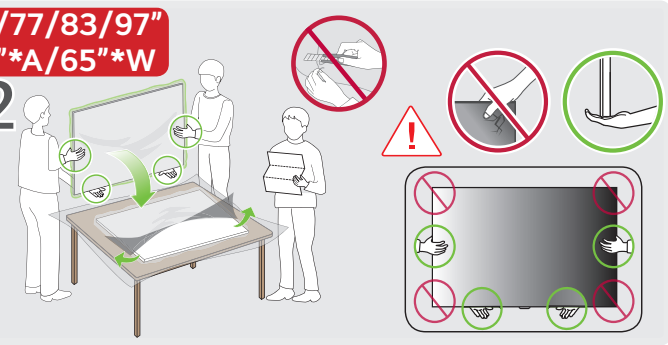

65”*S, 65”*B

1

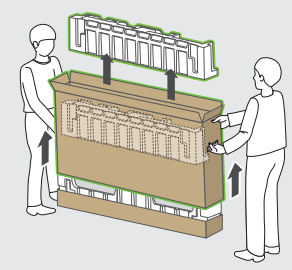

2

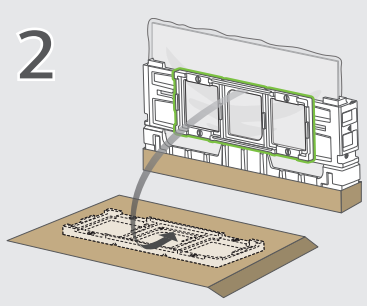

3

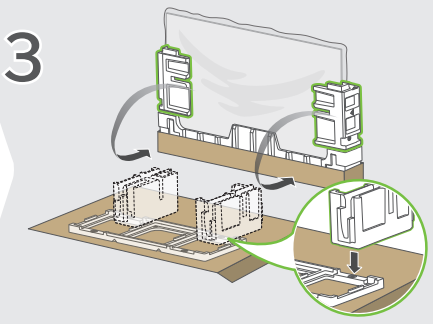

4

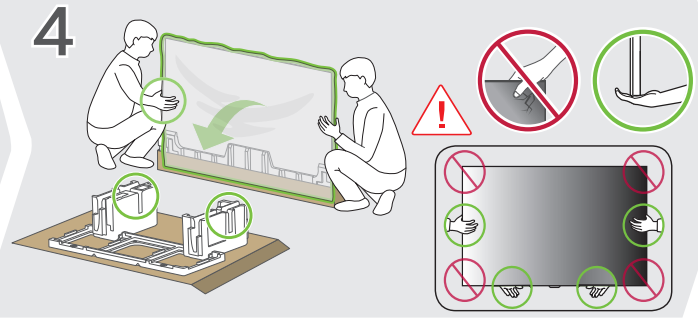

5

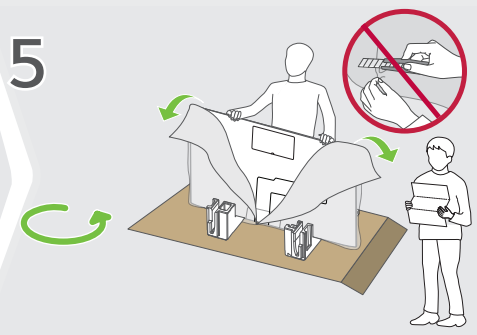

55”*A/55”*W/65”*A/65”*W

1

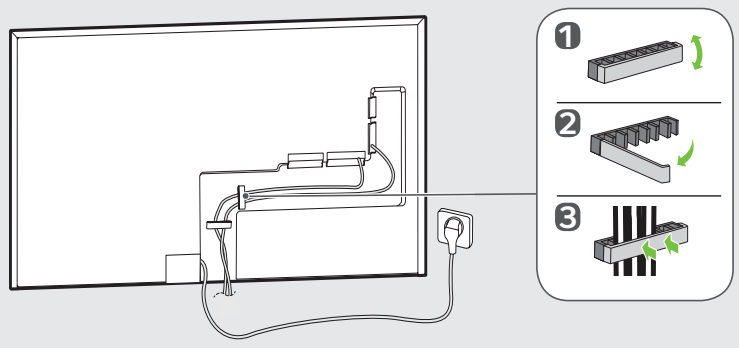

55”*S, 65”*S
55”*B, 65”*B

1

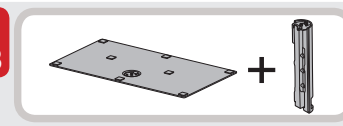

b x 4

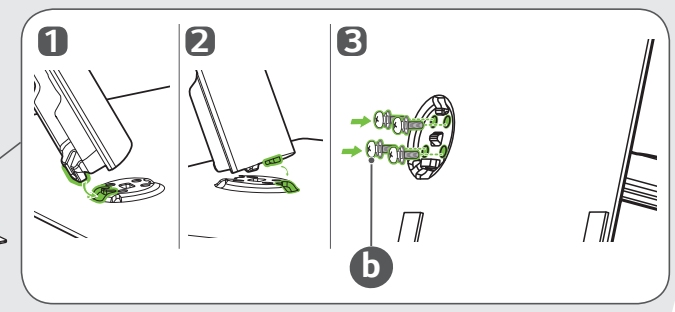

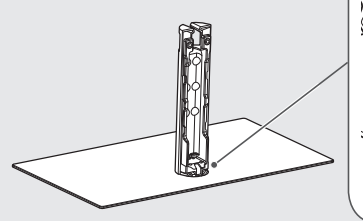

2

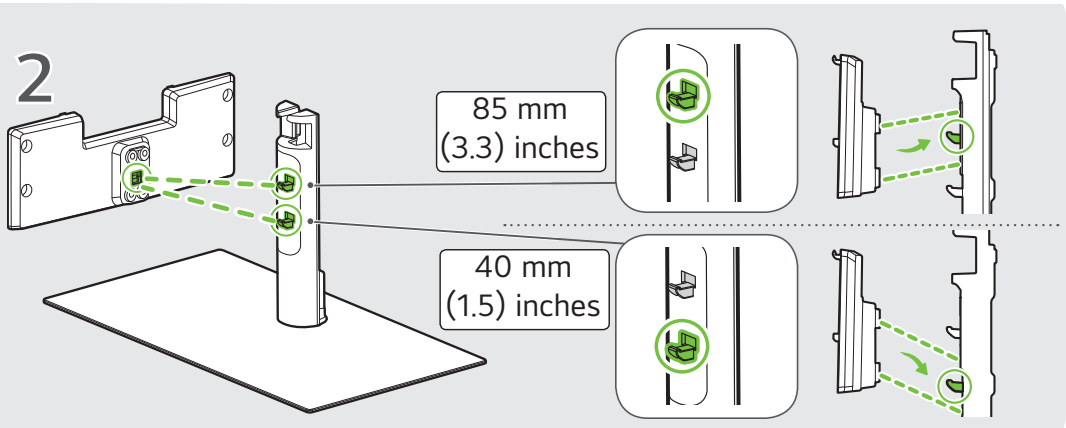

85 mm
(3.3) inches

40 mm
(1.5) inches

3

b x 4

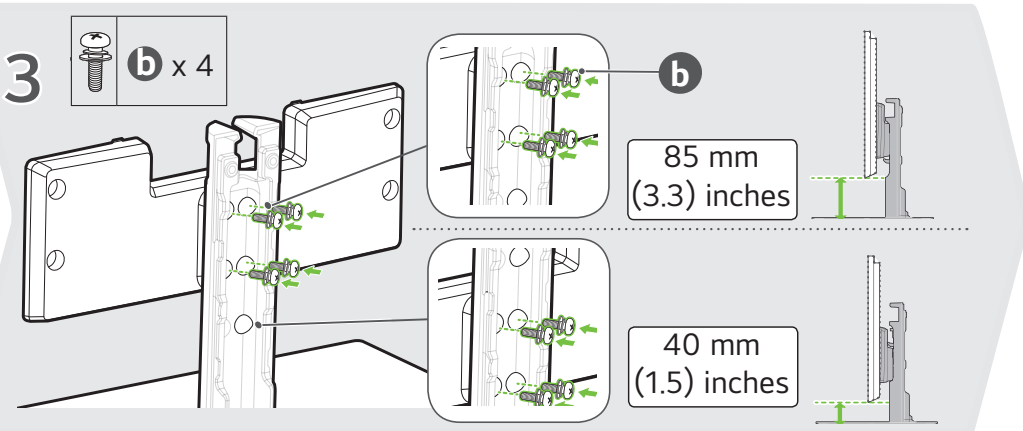

85 mm
(3.3) inches

40 mm
(1.5) inches

55”*S,
55”*B

4

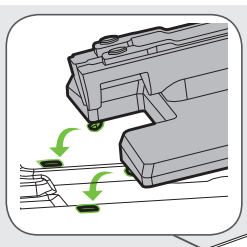

5

a

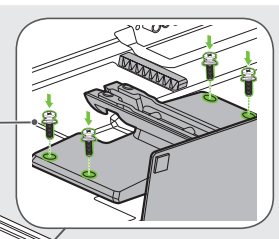

a x 4

65”*S,
65”*B

4

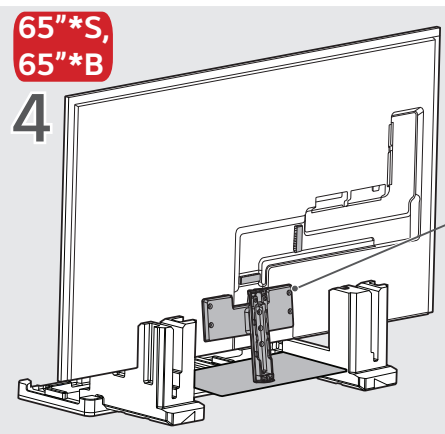

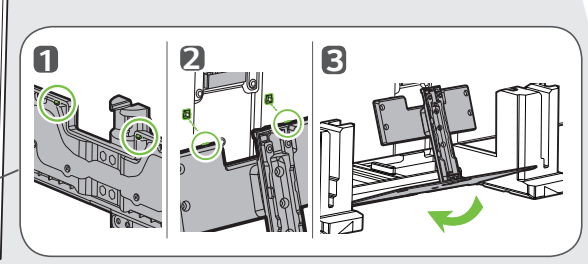

65"*S, 65"*B

5

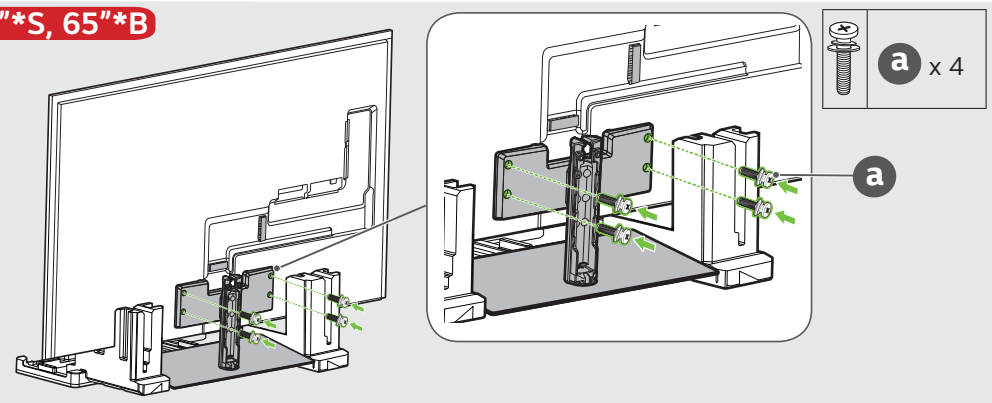

55"*S, 55"*B, 65"*S, 65"*B

6

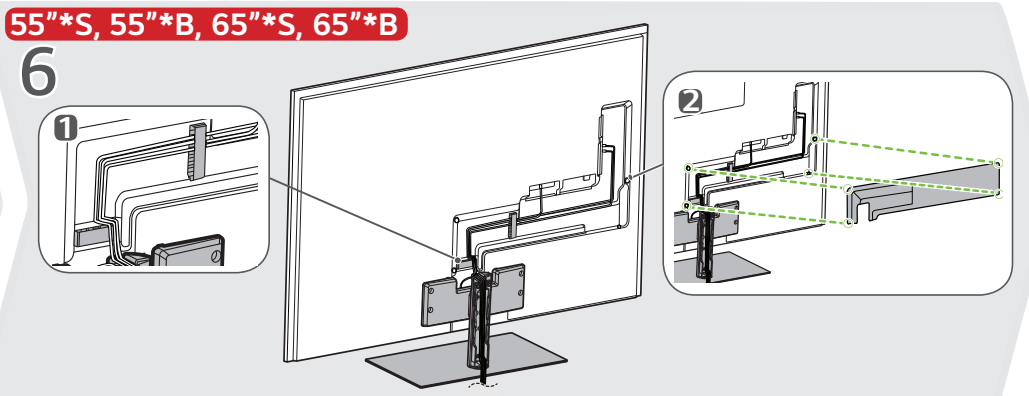

55"*S, 55"*B, 65"*S, 65"*B

7

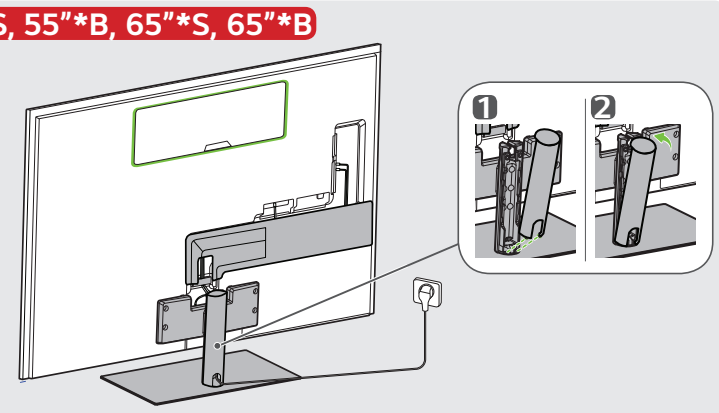

77/83/97"

1

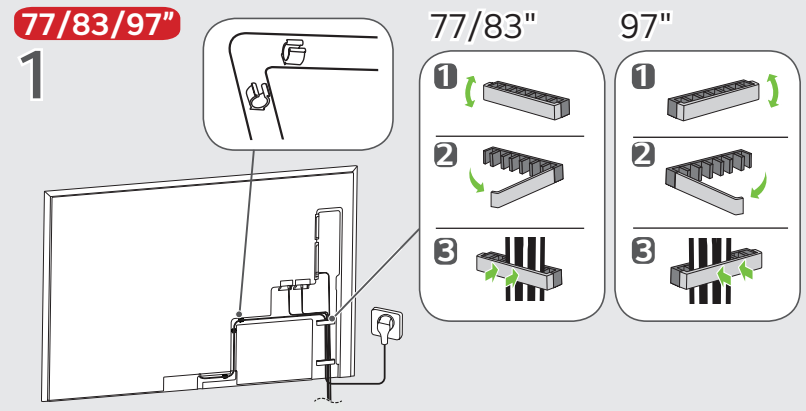

55/65/77/83/97"

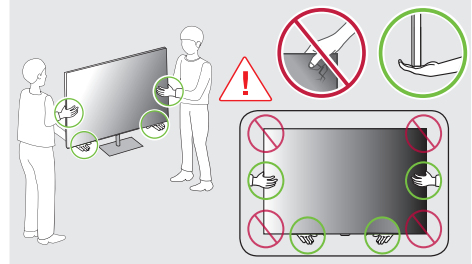

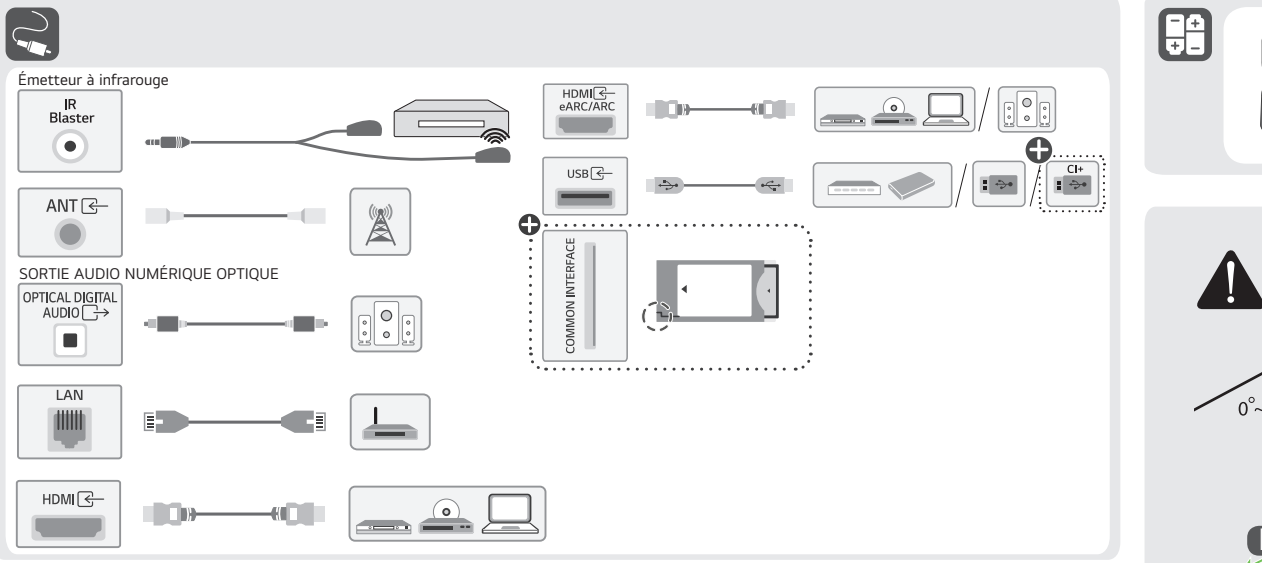

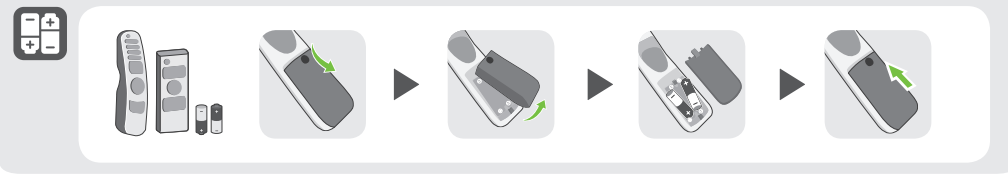

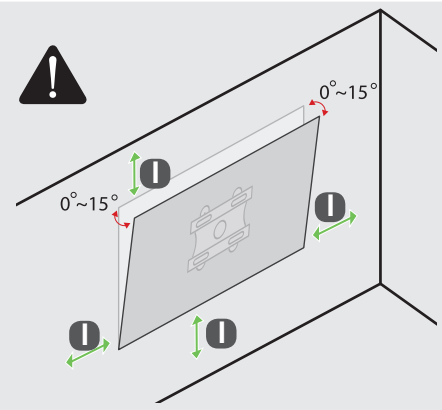

mm (inches / pulgadas / po / pol.)

	I
OLED55G6*	100 (3.9)
OLED65G6*	
OLED77G6*	
OLED83G6*	
OLED97G6*	300 (11.8)

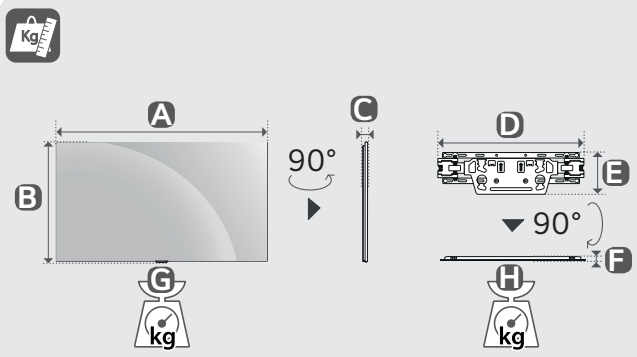

	mm (inches / pulgadas / po / pol.)						kg (lbs / libras / lb)	
	A	B	C	D	E	F	G	H
OLED55G6*A **OLED55G6*W**	1 222 (48.1)	703 (27.6)	27.2 (1.0)	452 (17.7)	129 (5.0)	13 (0.5)	16.8 (37.0)	1.2 (2.6)
OLED65G6*A **OLED65G6*W**	1 441 (56.7)	826 (32.5)	24.3 (0.9)	452 (17.7)	129 (5.0)	13 (0.5)	22 (48.5)	1.2 (2.6)
OLED77G6*	1 712 (67.4)	982 (38.6)	24.8 (0.9)	452 (17.7)	129 (5.0)	13 (0.5)	33.0 (72.7)	1.2 (2.6)
OLED83G6*	1 847 (72.7)	1 057 (41.6)	28 (1.1)	452 (17.7)	129 (5.0)	13 (0.5)	37.2 (82.0)	1.2 (2.6)

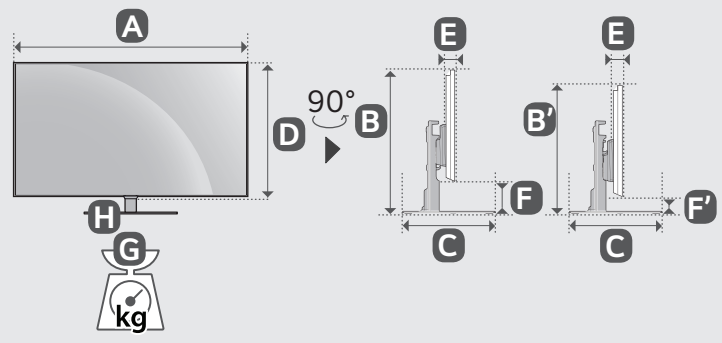

	mm (inches / pulgadas / po / pol.)						kg (lbs / libras / lb)	
	A	B / B'	C	D	E	F / F'	G	G - H
OLED55G6*B **OLED55G6*S**	1 222 (48.1)	787 / 742 (30.9 / 29.2)	263 (10.3)	703 (27.6)	27.2 (1.0)	85 / 40 (3.3 / 1.5)	22.1 (48.7)	16.8 (37.0)
OLED65G6*B **OLED65G6*S**	1 441 (56.7)	910 / 865 (35.8 / 34.0)	263 (10.3)	826 (32.5)	24.3 (0.9)	85 / 40 (3.3 / 1.5)	27.3 (60.1)	22 (48.5)

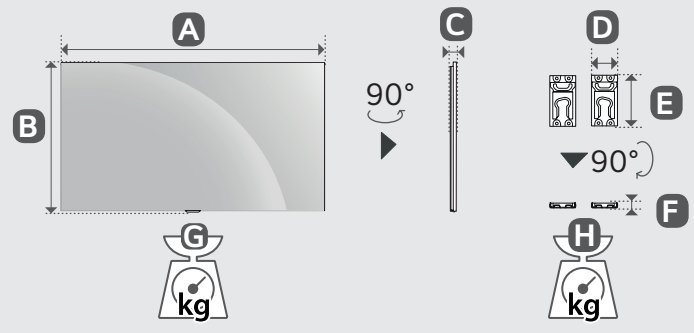

	mm (inches / pulgadas / po / pol.)						kg (lbs / libras / lb)	
	A	B	C	D	E	F	G	H
OLED97G6*	2 155 (84.8)	1 230 (48.4)	28.2 (1.1)	134.8 (5.3)	254 (10)	16 (0.6)	57 (125.6)	2.8 (6.1)

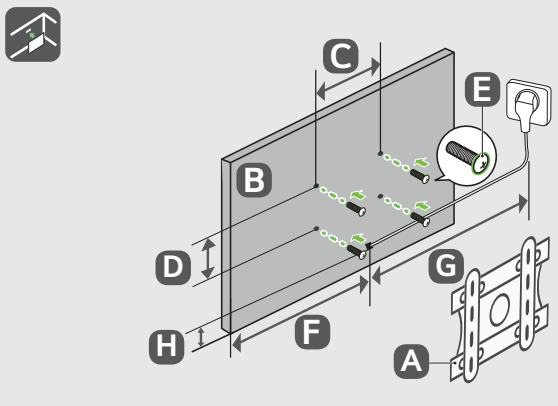

A	B	E	**mm** (inches / pulgadas / po / pol.)			
			C x D	F	G	H
OLW480B	**OLED55G6***	M6	300 x 200 (11.8 x 7.8)	544 (21.4)	≧1.5 m (59.0) inches	56 (2.2)
WB24GCB	**OLED65G6***		300 x 300 (11.8 x 11.8)	654 (25.7)		56 (2.2)
	OLED77G6*			856 (33.7)		57 (2.2)
WB24GCB	**OLED83G6***		400 x 400 (15.7 x 15.7)	924 (36.3)		59 (2.3)
WB24GDB	**OLED97G6***	M8	600 x 400 (23.6 x 15.7)	943 (37.1)		142 (5.5)

* : 0~9, A~Z

Printed in Korea
Imprimé en Corée