OWNER'S MANUAL

DRYER

Before beginning installation, read these instructions carefully. This will simplify installation and ensure that the product is installed correctly and safely. Leave these instructions near the product after installation for future reference.

ENGLISH

RH80Z1GPBRC / RH80Z1APBRC

MFL05867701
Rev.00_022726

www.lg.com

Copyright © 2026 LG Electronics. All Rights Reserved

TABLE OF CONTENTS

This manual may contain images or content that may be different from the model you purchased.

This manual is subject to revision by the manufacturer.

SAFETY INSTRUCTIONS

READ ALL INSTRUCTIONS BEFORE USE....3
WARNING....3

INSTALLATION

Parts and Specifications....9
Installation Location Requirements....12
Leveling the Appliance....14
Stacking Instructions....15

OPERATION

Operation Overview....19
Preparing the Clothes....20
Control Panel....22
Programme Table....24
Extra Options and Functions....28

MAINTENANCE

Cleaning after Every Dry....30
Cleaning the Appliance Periodically....33

TROUBLESHOOTING

Before Calling for Service....35

SAFETY INSTRUCTIONS

READ ALL INSTRUCTIONS BEFORE USE

The following safety guidelines are intended to prevent unforeseen risks or damage from unsafe or incorrect operation of the appliance. The guidelines are separated into 'WARNING' and 'CAUTION' as described below.

Safety Messages

⚠ This symbol is displayed to indicate matters and operations that can cause risks. Read the part with this symbol carefully and follow the instructions in order to avoid risks.

⚠ **WARNING**
This indicates that the failure to follow the instructions can cause serious injury or death.

⚠ **CAUTION**
This indicates that the failure to follow the instructions can cause the minor injury or damage to the appliance.

WARNING

⚠ WARNING

To reduce the risk of explosion, fire, death, electric shock, injury or scalding to persons when using this product, follow basic precautions, including the following.

Technical Safety

- This appliance is not intended for use by persons (including children) with reduced physical, sensory or mental capabilities, or lack of experience and knowledge, unless they have been given supervision or instruction concerning use of the appliance by a person responsible for their safety.

- Children should be supervised to ensure that they do not play with the appliance.
- Do not dry unwashed items in the appliance.
- Fabric softeners, or similar products, should be used as specified by the fabric softener instructions.
- Remove all objects from pockets such as lighters and matches.
- Never stop the appliance before the end of the drying cycle unless all items are quickly removed and spread out so that the heat is dissipated.
- The appliance is not to be used if industrial chemicals have been used for cleaning.
- Items that have been soiled with substances such as cooking oil, vegetable oil, acetone, alcohol, petroleum, kerosene, spot removers, turpentine, waxes and wax removers should be washed in hot water with an extra amount of detergent before being dried in the appliance.
- Do not drink the condensed water. Failure to do so may result in food-borne illnesses.
- If the supply cord is damaged, it must be replaced by the manufacturer or its service agents or similarly qualified person in order to avoid a hazard.
- The lint filters must be cleaned frequently.
- Lint must not to be allowed to accumulate around the appliance.
- Do not spray dry cleaning detergent directly onto the appliance or use the appliance to dry clothes left with dry cleaning detergent.
- Do not dry clothes stained with oil substances. Oil substances (including edible oils) stained on clothes cannot be completely removed even after washing with water.
- The appliance must not be supplied through an external switching device, such as a timer, or connected to a circuit that is regularly switched on and off by a utility.
- Remove clothes from the product immediately when drying is complete or the power is turned off during the drying process. Leaving clothes that has been dried in the appliance unattended

could result in fire. Remove clothes immediately after drying, and then hang or lay the clothes flat to cool.

- This appliance is intended to be used in household only.

Maximum Capacity

- The maximum capacity in some cycles for clothes to be dried is **8 kg (Dry)**.
- The recommended maximum capacity for each drying programme may differ. To get good dry results, please refer to **Programme Table** in **OPERATION** chapter for further details.

Installation

- Make sure the appliance is properly installed, grounded, and adjusted by qualified service personnel according to the installation instructions.
- Never attempt to operate the appliance if it is damaged, malfunctioning, partially disassembled, or has missing or broken parts, including a damaged cord or plug.
- This appliance should only be transported by two or more people holding the appliance securely.
- Do not install the appliance in a damp and dusty place. Do not install or store the appliance in any outdoor area, or any area that is subject to weathering conditions such as direct sunlight, wind, rain, or temperatures below freezing.
- Tighten the drain hose to avoid separation.
- If the power cord is damaged or the hole of the socket outlet is loose, do not use the power cord and contact an authorized service centre.
- Do not plug multiple socket outlets, an extension power cable or adapter with this appliance.
- Items such as foam rubber (latex foam), shower caps, waterproof textiles, rubber backed articles and clothes or pillows fitted with foam rubber pads should not be dried in the appliance.

- This appliance must not be installed behind a lockable door, a sliding door or a door with a hinge on the opposite side to that of the appliance, in such a way that a full opening of the appliance door is restricted.
- This appliance must be grounded. In the event of malfunction or breakdown, grounding will reduce the risk of electric shock by providing a path of least resistance for electric current.
- This appliance is equipped with a power cord having an equipment-grounding conductor and a grounding power plug. The power plug must be plugged into an appropriate socket outlet that is installed and grounded in accordance with all local codes and ordinances.
- Improper connection of the equipment-grounding conductor can result in risk of electric shock. Check with a qualified electrician or service personnel if you are in doubt as to whether the appliance is properly grounded.
- Do not modify the power plug provided with the appliance. If it does not fit the outlet, have a proper outlet installed by a qualified electrician.

Operation

- Do not attempt to separate any panels or disassemble the appliance. Do not apply any sharp objects to the control panel in order to operate the appliance.
- Do not repair or replace any part of the appliance yourself. All repairs and servicing must be performed by qualified service personnel unless specifically recommended in this Owner's Manual. Use only authorized factory parts.
- Keep the area underneath and around the appliance free from combustible materials such as lint, paper, rags, chemicals, etc.
- Do not put pets or other animals into the appliance.
- Do not leave the appliance door open. Children may hang on the door or crawl inside the appliance, causing damage or injury.
- Never reach into the appliance while it is operating. Wait until the drum has completely stopped.

- Do not put in, wash or dry articles that have been cleaned in, washed in, soaked in, or spotted with combustible or explosive substances (such as wax, oil, paint, gasoline, degreasers, drycleaning solvents, kerosene, vegetable oil, cooking oil, etc.). Improper use can cause fire or explosion.
- In case of flood, disconnect the power plug and contact the LG Electronics customer information centre.
- Do not push down on the appliance door when it is open.
- Do not use flammable gas and combustible substances (benzene, gasoline, thinner, petroleum, alcohol, etc.) near the appliance.
- If the drain hose or inlet hose is frozen during winter, thaw it out before using the appliance.
- Keep all washing detergents, softener and bleach away from children.
- Do not touch the power plug or the appliance controls with wet hands.
- Do not bend the power cable excessively or place a heavy object on it.

Maintenance

- Remove any moisture or dust from the power plug before securely plugging it into an outlet.
- Disconnect the appliance from the power supply before cleaning the appliance. Setting the controls to the OFF or stand by position does not disconnect this appliance from the power supply.
- Never unplug the appliance by pulling on the power cable. Always grip the power plug firmly and pull straight out from the outlet.
- Do not spray water inside or outside the appliance to clean it.

Disposal

- Before discarding an old appliance, unplug it and cut off the power cable directly behind the appliance to prevent misuse.

- Dispose of all packaging materials (such as plastic bags and styrofoam) away from children. The packaging materials can cause suffocation.
- Remove the door before disposing of or discarding this appliance to avoid the danger of children or small animals getting trapped inside.

INSTALLATION

Parts and Specifications

Front View

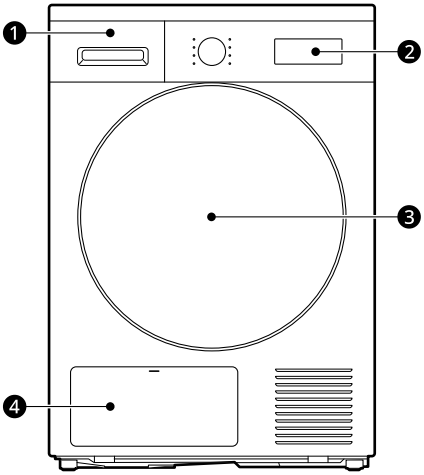

1 Water Container
2 Control Panel
3 Door
4 Condenser Cover

Specifications

Asterisk(s) means model variant and can be varied (0-9) or (A-Z).

Model	RH80Z1GPBRC / RH80Z1APBRC
Power supply	220-240 V~, 60 Hz
Dimension (Width X Depth X Height)	600 mm X 600 mm X 850 mm
Product weight	45 kg
Allowable temperature	5 - 35 ℃
Maximum Power	750 W
Annual Energy Consumption	235 kWh/year
Country of origin	MADE IN CHINA

Available Accessories

Please contact LG Electronics Customer Information Centre or visit the LG Website at http://www.lg.com for purchase.

<table>
<tr><td rowspan="2">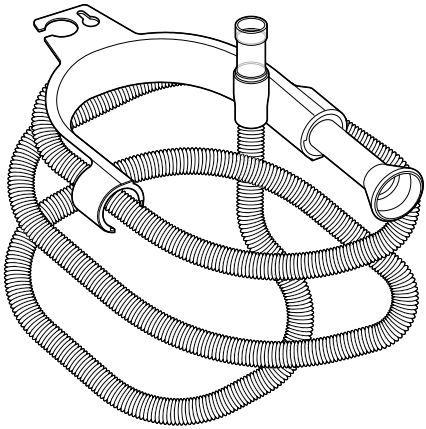</td><td>
Condensing Drain Hose</td></tr>
<tr><td>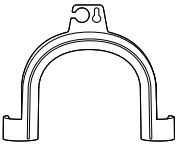
Elbow Bracket for Securing Drain Hose</td></tr>
</table>

NOTE

- In order to stack the appliance, the stacking kit should be purchased separately.

Installation Location Requirements

Installation Location

⚠ WARNING

- Do not install the appliance around a heat source. The rear side of the appliance must be well ventilated. Failure to follow these instructions may result in problems.
- The appliance is not designed for maritime use or for use in mobile installation such as caravans, aircraft and etc.
- Do not install the appliance as a built-in appliance. It is not suitable for built-in purpose.

NOTE

- For better drying performance, keep the rear of the appliance away from the wall.

- Make sure that the location where the appliance will be installed meets a minimum clearance conditions.
- Install the appliance on a flat hard floor. Allowable slope under the appliance is 1 degree.
- Never try to correct any unevenness in the floor with pieces of wood, cardboard or similar materials under the appliance.
- Install the appliance in a location where service engineers are easily accessible in the event of a breakdown.
- Do not install the appliance next to high-temperature appliances such as refrigerator, oven or stove, and etc. It can cause poor drying performance and delay programme duration. It also adversely affect the proper functioning of the compressor.
- Do not install the appliance where there is a risk of frost or dust. The appliance may not be able to operate properly or may be damaged by freezing of condensed water in the pump and drain hose.
- With the appliance installed, adjust all four feet using a spanner to ensure the appliance is stable, and a clearance of approximately 20

mm is left between the top of the appliance and the underside of any work-top.

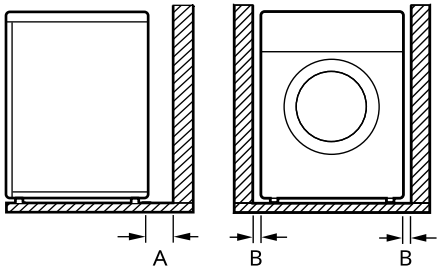

Index	Clearance (mm)
A	100

Index	Clearance (mm)
B	50

Ventilation

- Alcove or under counter
  - Make sure that air circulation around the appliance should not be impeded by carpets, rugs, etc.
- Cupboard
  - Cupboard door must have 2 (louvered) opening, each have a minimum area of 387 cm^2, located 8 cm from bottom and top of the door.

Ambient Temperature

- Do not install the appliance in rooms where freezing temperatures may occur. Frozen hoses may burst under pressure. The reliability of the electronic control unit may be impaired at temperatures below freezing point.

NOTE

- If the appliance is delivered in winter and temperatures are below freezing, place the appliance at room temperature for a few hours before putting it into operation.

NOTE

- The appliance performs best at a room temperature of 23 °C.

Electrical Connection

- Do not use an extension cord or double adapter.
- Do not overload the outlet with more than one appliance.
- Connect the appliance to an earthed socket in accordance with current wiring regulations.
- The appliance must be positioned a place close to outlet socket so that the plug is easily accessible.
- Outlet socket must be within 1.5 meters of either side of the location of the appliance.

NOTE

- Always unplug the appliance after use.

Leveling the Appliance

Checking Leveling

Leveling the appliance prevents unnecessary noise and vibration. Check whether the appliance is perfectly level after installation.

- If the appliance rocks when pushing the top plate of the appliance diagonally, adjust the feet again.

NOTE

- Timber or suspended type flooring may contribute to excessive vibration and unbalance. Re-enforcement or bracing of the timber floor may need to be considered to stop or reduce excessive noise and vibration.
- Do not install the appliance on any elevated surface, stand or plinth as it can become unstable and fall causing serious injury and damage.

Adjusting and Leveling the Appliance

When the appliance is not perfectly level, turn the adjustable feet until the appliance no longer wobbles.

- Turn the adjustable feet clockwise to raise or turn the adjustable feet counterclockwise to lower from front-to-back, side-to-side and corner-to-corner.

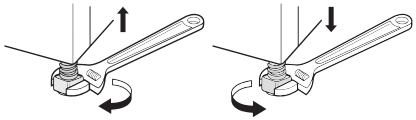

Stacking Instructions

Stacking Kit

In order to stack the appliance, an LG stacking kit is required.

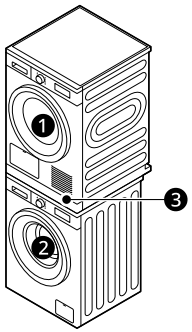

❶ Dryer

❷ LG Front Load Washing Machine

❸ Stacking Kit

⚠ CAUTION

- The appliance may only be stacked on top of an LG front load washing machine. Do not attempt to stack the appliance on any other washing machine, as it could result in damage, injury or property damage.

NOTE

- In order to stack the appliance, the stacking kit should be purchased separately.

⚠ WARNING

- For safety reasons, installation procedure should be performed by two or more qualified service personnel.
- The weight of the appliance and the height of the installation makes the installation procedure too risky for one person.
- Incorrect installation can cause serious accidents.
- Do not operate if the appliance is not properly stacked.

NOTE

- The stacking kit should be aligned depending on the depth of the washing machine. (When you look at the side or backside of the washing machine, you can find the dimension information of your washing machine at the label.)

Installing the Optional Drain Hose

Normally, condensed water is pumped up to the water container where water is collected until manually emptied. Water can also be drained out directly to a mains drain, especially when the appliance is stacked on top of a washing machine. With the connecting elbow or the mains drain hose, simply change the water path and re-route to the drainage facility as below:

1 Separate the water container hose from the backside of the water container housing.

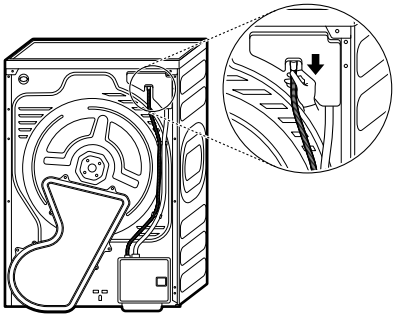

2 Connect the water container hose to the optional drain hose.

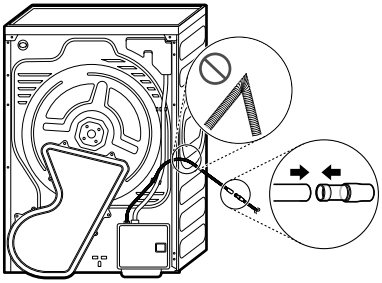

3 The drain hose should not be placed higher than 150 cm above the floor. Water in the appliance may not drain or may drain slowly.
- Securing the drain hose correctly will protect the floor from damage due to water leakage.

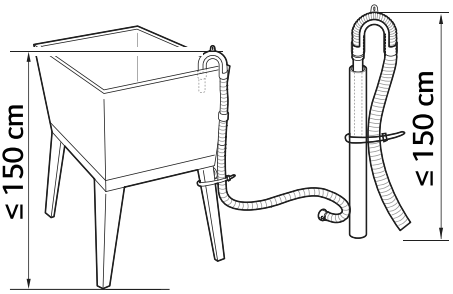

- If the drain hose is too long, do not force it back into the appliance. This will cause abnormal noise.

- When installing the drain hose to a sink, secure it tightly with string.

⚠ CAUTION

- If the optional drain hose is installed in a way that leaves it bent or pinched, drainage may not function properly.

OPERATION

Operation Overview

Using the Appliance

Open the door between loads the first few times you use the appliance to allow any odours from the interior of the appliance to disperse.

Children must be supervised so that they do not climb inside the drum.

1 Ensure the lint filter and water container are clean.

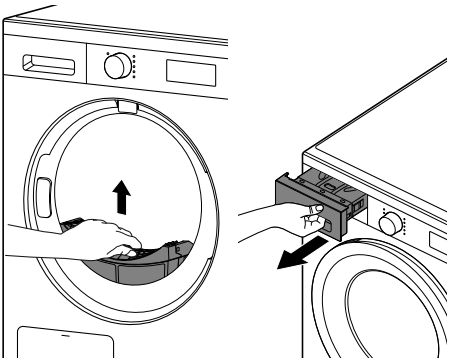

- Open the door and ensure the lint filter is clean. When the filter is full with lint, drying times will be longer than usual.
- Pull out the water container and empty the condensed water. When the water container is full, the appliance may stop during the cycle.

NOTE

- In some instance, LED window may display to inform you that the water container is full. If this occurs, empty the water container.

2 Place the clothes into the drum after sorting and close the door.

- Push the clothes deep into the drum so that the clothes keeps away from the door seal. When the clothes get stuck between the door and seal, they may get damaged while drying.
- The clothes should be sorted by fabric types and dryness level.
- All strings and attached belts of clothes should be well tied and fixed before being put into the drum.

3 Press the **Power** button to turn the appliance on.

- Depending on the models, the **Power** button may light up to indicate that the appliance is ready for dry.

4 Choose a drying programme by turning the programme selector knob.

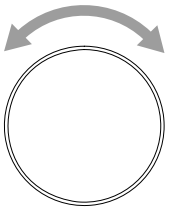

5 Press the **Start/Pause** button to start the drying programme.

6 After the drying programme has finished, open the door and unload the clothes.

⚠ CAUTION

- Be carefull! The drum inside may still be hot.

7 Press the **Power** button to turn the appliance off.

8 Clean the lint around the door glass, rubber packing, and filter.
- Wipe clean with a damp cloth or wet tissue.

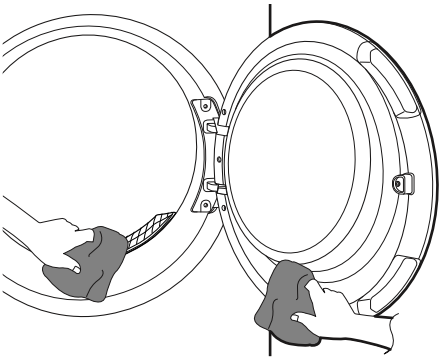

9 Clean the lint filter and empty the water container.

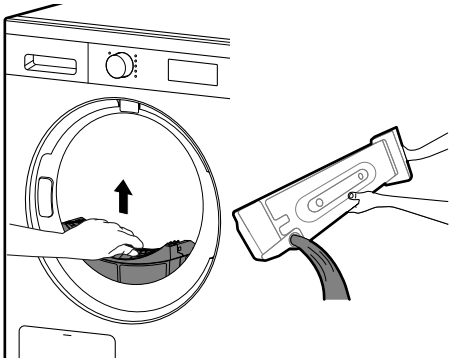

10 To help reduce odours from forming, the dryer's door can be left open or slightly ajar for a short period of time if possible to help ventilate the drum after use.

⚠ WARNING

- For safety reasons, do not allow children or animals to enter the appliance. It may cause damage or injury.

NOTE

- The final part of a tumble dry cycle occurs without heat (cool down cycle) to ensure that the clothes are left at a temperature that ensures the clothes will not be damaged.
- A high atmospheric temperature and a small room may both increase drying time as well as energy consumption.

Preparing the Clothes

NOTE

- For the best drying performance and most efficient energy usage, do not overload the appliance.

Checking the Clothes before Loading

⚠ CAUTION

- Check that the clothes are not stuck between appliance and door, otherwise the clothes may get damaged while drying.

- Observe the maximum load capacity on the programme table for the relevant drying programme to get optimum drying results. Overloading gives a poor drying result and causes unnecessary creasing.
- Do not load soaking wet clothes into the appliance. Doing so will increase the drying time and energy consumption. Make sure that the clothes are spun thoroughly in the washer before loading them in the dryer.
- A mixed fabric load can cause the drying time to be extended and the time remaining in the display to pause during active drying until the actual time remaining matches the time displayed.
- Make sure to empty all pockets. Items such as nails, hair clips, matches, pens, coins and keys can damage both your appliance and clothes.
- Remove loose belts and close zippers, hooks and strings to make sure that these items do not snag other clothes.

Sorting the Clothes

Clothes have their own fabric care labels, so drying according to the fabric care label is recommended.

Sort the clothes into size and type of fabric and then prepare the clothes according to the symbols on the fabric care labels.

Woollens

- Dry woollens on the **Wool** programme. Be sure to follow fabric care label symbols first. Wool may not be completely dried from the cycle, so do not repeat drying. Pull woollens to their original shape and dry them flat.

Woven and Loopknit Materials

- Some woven and loopknit materials may shrink, depending on quality.

No-Iron and Synthetics

- Do not overload the appliance. Take out no-iron items as soon as the appliance stops to reduce creases.

Baby Clothes and Nightgowns

- Always check fabric care labels.

Rubber and Plastics

- Do not dry any items made from or containing rubber or plastics such as:
  - Aprons, Bibs and Chair Covers
  - Curtains and Tablecloths
  - Bath Mats

Fiberglass

- Do not dry fiberglass items in the appliance. Glass particles left in the appliance may be subsequently picked up by your clothes in later cycles.

Checking the Fabric Care Label

The symbols on the fabric care label tell you about the fabric content of your clothes and how they should be dried.

Symbol	Description
	Dry
	Tumble Dry
	Permanent Press / Crease Resistant
	Gentle / Delicate
	Do not Tumble Dry
	Do not Dry
	High Heat
	Medium Heat
	Low Heat
	No Heat / Air
	Line Dry / Hang to dry
	Drip Dry
	Dry Flat
	In the Shade

Control Panel

Control Panel Features

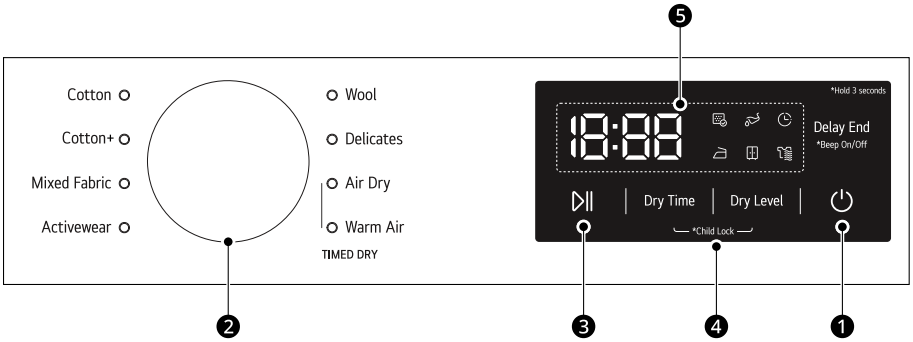

	Description
❶	**Power On/Off Button** • Press the **Power** button to turn power on and off.
❷	**Programme Selector** • Programmes are available according to the clothing type. • The lamp will light up to indicate the selected programme.
❸	**Start/Pause Button** • Press the **Start/Pause** button to start or pause a dry cycle. • When in pause, the power is turned off automatically after a certain time for safety reasons.
❹	**Extra Options and Functions** • Use these buttons to select the desired options for the selected programme. Not all options are available in each programme. • To use the extra functions, press and hold the corresponding button for 3 seconds. The corresponding symbol lights up in the display.
❺	**Time and Status Display** • The display shows the settings, estimated remaining time, options, and status messages. When the appliance is turned on, the default settings in the display will illuminate.

Time and Status Display

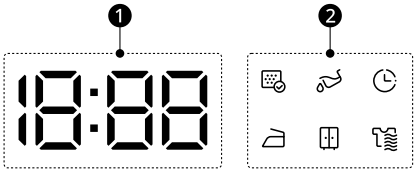

	Description
❶	**Time Remaining Display** • When a drying programme is selected, drying time for the selected programme is displayed. This time will change when you set the extra options for the programme. • Error messages will appear when the appliance diagnose problems.
❷	**Extra Option and Function Indicator** • lights up when the lint filter should be cleaned. - Cleaning notice: When you press the **Power** button, the icon will become displayed. • lights up when the water collection tank needs to be emptied or is full. - Emptying notice: When you press the **Power** button, this icon will become displayed. - Full water notice: The icon will become displayed and a chime will sound while the appliance is in operation. • lights up when the **Delay End** feature is activated. - **Delay End**: Can set the delay end from 2 to 24 hours. • lights up when the drying programme is in **Iron** dry level. • lights up when the drying programme is in **Cupboard** dry level. • lights up when the drying programme is in **Extra** dry level.

Programme Table

Drying Programme

Programme	Cotton	Max. Load Capacity	8 kg
Description	Use for drying all normal items such as cotton, linen, shirts, jeans or mixed loads, except delicate fabrics such as wool or silk.		
Dry Level	Default : **Cupboard**	Available : **All**	

Programme	Cotton+	Max. Load Capacity	8 kg
Description	Use for drying with less energy consumption than **Cotton** programme with comparable settings.		
Dry Level	Not adjustable		
Note	• It is suitable to dry normal wet cotton laundry and it is the most efficient programme in terms of energy consumption for drying wet cotton laundry. • Set programme at "**Cotton+**, ⊞ (Full & Half Load)" for test in accordance in conformity with **SASO 2883**. • Standard Cotton programme : **Cotton+**, ⊞ Option (Default) - (This is the most efficient programmes in terms of the test conditions proposed by **SASO 2883**.) - (They are suitable to dry normal wet cotton laundry.) - (They are the most efficient programme in terms of energy consumption for drying wet cotton laundry.) • The test results depend on room temperature, type and amount of load, water hardness and water inlet temperature. • Install the appliance and connect drain hose by referring "Installing the Optional Drain Hose" for test in according to **SASO 2883**.		

Programme	Mixed Fabric	Max. Load Capacity	3.5 kg
Description	Dries mixed fabrics simultaneously. • Use for various kind of fabrics except special garments (silk/delicate, sports wear, dark clothes, wool, duvet/curtains).		
Dry Level	Default : **Cupboard**	Available : **All**	

Programme	Activewear	Max. Load Capacity	3 kg
Description	Use this programme for drying special garments such as sports and outdoor wear.		
Dry Level	Default : **Cupboard**	Available : **All**	

Programme	Wool	Max. Load Capacity	1 kg
Description	Use this programme for refreshing shrinkable woolen or hand-washable items requiring delicate care.		
Dry Level	Not adjustable		

Programme	Delicates	Max. Load Capacity	1 kg
Description	Use this programme for drying dress shirts, blouses, nylons, lingerie, or sheer and lacy clothes which can easily be damaged.		
Dry Level	Default : **Cupboard**	Available : **All**	

Timed Drying Programme

Use this programme to manually select the drying time.

Programme	Air Dry	Max. Load Capacity	-
Description	Tumble dries heat-sensitive items.		
Dry Time	Default: 10 minutes	Available: 10-30 min	

Programme	Warm Air	Max. Load Capacity	-
Description	Use this programme to dry clothes that can be tumble dried using heat.		
Dry Time	Default: 10 minutes	Available: 10-150 min	

⚠ CAUTION

- If the load is less than 1 kg, please use the **Warm Air** programme in Timed Drying programmes. Wool items should be dried using the **Wool** programme and heat-sensitive fabrics including silk, underwear and lingerie should be dried using the **Delicates** programme. Please comply with the recommended clothing load when you select your desired programme. Otherwise, your clothes may be damaged.

NOTE

- If the appliance is installed as built under, it may cause performance degradation.
- If the clothes are not spun at a high speed during washing, energy consumption and drying times will increase. Large Bed sheets or quilt covers may not dry evenly due to uneven airflow should they become rolled up. They may require removal and reloading mid cycle to ensure proper drying.

Selectable Drying Options

Programme	Dry Level	Dry Time	Delay End
Cotton	●		●
Cotton+			●
Mixed Fabric	●		●
Activewear	●		●
Wool			●
Delicates	●		●
Air Dry		●	●

Programme	Dry Level	Dry Time	Delay End
Warm Air		●	●

Extra Options and Functions

Delay End

It allows you to delay the finishing time of the drying cycle from 2 hours to 24 hours.

1 Turn the appliance on.

2 Select a programme.

3 Press the **Delay End** button.

4 Set time delay hour(s) by pressing the **Delay End** button.

5 Press the **Start/Pause** button.

Dry Level

It allows you to select a dryness level for the drying programme.

- **Extra**: For thick and quilted fabrics
- **Cupboard**: For fabrics that do not need to be ironed
- **Iron**: For fabrics that need to be ironed

1 Turn the appliance on.

2 Select a programme.

3 Select a dryness level by pressing the **Dry Level** button repeatedly.

Dry Time

It allows you to increase drying time when you use Timed Drying programmes such as **Air Dry** and **Warm Air**.

- Press the **Dry Time** button to increase the selected programme time by 10 minutes.

Child Lock

It allows you to control the locking and unlocking of control panel. It prevents children from changing cycles or operating the appliance.

Locking the Control Panel

1 Press and hold the **Dry Time** and **Dry Level** button simultaneously for 3 seconds.

2 A chime will sound, and CL will appear on the display.
   - When the function is activated, all buttons are locked except for the **Power** button.

NOTE

- Turning off the power or completing all cycles will not reset the child lock function. You must deactivate child lock before you can access any other functions.

Unlocking the Control Panel

Press and hold the **Dry Time** and **Dry Level** button simultaneously for 3 seconds.

- A chime will sound and the remaining time for the current programme will reappear on the display.

Beep On/Off

It allows you to turn the chime sound on and off. Press and hold the **Delay End** button for 3 seconds.

- A chime will sound when the function is turned on.

NOTE

- Turning off the power or completing all cycles will not reset the function. You must press and hold the **Delay End** button for 3 seconds again to turn the chime sound on and off.

Anti Crease

It allows you to reduce creases that are formed when the clothes are not unloaded promptly at the end of drying cycle.

When the function is turned on, the appliance repeatedly runs for 10 seconds and pauses for 9 minutes 50 seconds. The option is turned off automatically after 30 minutes at the end of drying cycle.

NOTE

- When the function is turned on, a rectangle with a dashed line appears on the display until the feature is off.
- When the function is turned on, only the **Power** button works after the drying cycle is end.
- Always turn off the appliance before unloading the clothes.

Standby Power Consumption

Standby power consumption	0.50 W
Network standby power consumption	N/A
The period of time after which the power management function, or a similar function, switches the equipment automatically into standby and/or off mode and/or the condition providing networked standby	10 min.

NOTE

- The activation of the network connection may increase the power consumption of the appliance.

MAINTENANCE

⚠ WARNING

- Remove the power plug when you clean the appliance. Not removing the plug may result in electric shock.

Cleaning after Every Dry

Cleaning the Lint Filters

⚠ CAUTION

- Clean the lint filters in the proper way referring to the following instructions. Failure to do so, the lint that is accumulated on the radiator may not be cleaned properly.
- When the lint drops into the filter inlet, it may cause less efficient drying performance and increase of drying time.

NOTE

- Unload all of the laundries from the appliance before pull out the lint filters.
- Put the lint filters back in place after cleaning. If the lint filters are not in the appliance, you can not operate the appliance.
- When cleaning the filters, the lint should be thrown in the trash and not washed through the drain in order to avoid spreading microplastics in the used water system.

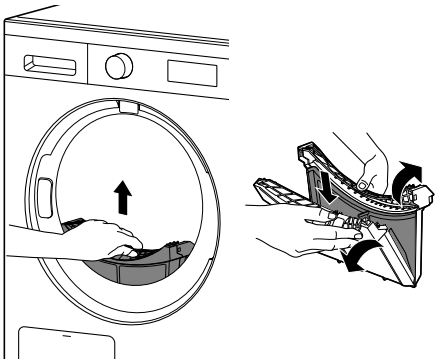

Inner Filter

- Always clean the inner filter before and after use.

Outer Filter

- Clean the outer filter after drying 10 times or when the lint is accumulated into the outer filter.

Clean the inner filter

1 Pull out the inner filter from the outer filter and then open the inner filter.

- Open the filter by unfolding it in the direction of the arrows.

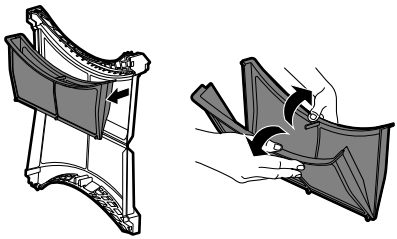

2 Remove large clusters of lint by hand, then use a vacuum cleaner to clean remaining lint.

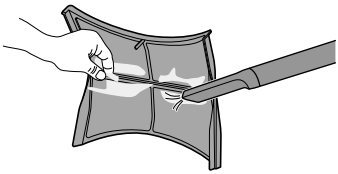

- Avoid using excessive force to prevent damaging the filter.
- Dry the filter completely if the filter is moist. Failure to do so, odour may occur in the appliance.
- Throw lint in the trash.

3 Insert the inner filter into the outer filter.

Clean the outer filter

1 Remove large clusters of lint by hand, then use a vacuum cleaner to clean remaining lint.

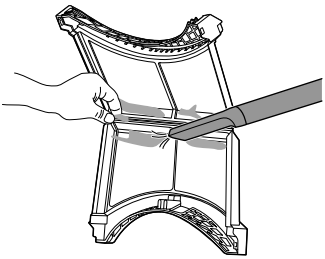

- Avoid using excessive force to prevent damaging the filter.
- Dry the filter completely if it is moist. Failure to do so may result in odour in the appliance.
- Throw lint in the trash.

NOTE

- Ensure the side of the filter is closed properly. Failure to do so, any lint accumulated on the filter may get into the appliance and may cause degradation of the drying performance.

2 Insert the inner filter into the outer filter and close the outer filter.

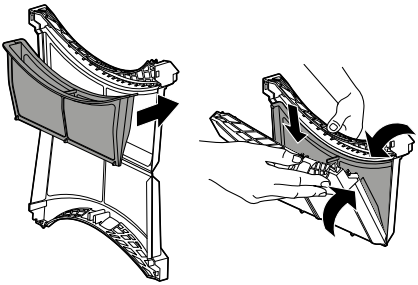

3 Reinsert the lint filter set to the dryer.

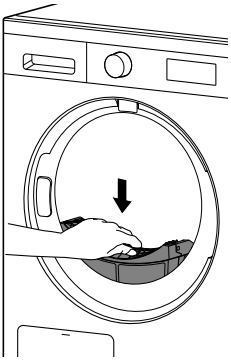

⚠ CAUTION

- Do not load or remove any clothes when the lint filter is not in place. The clothes can drop into the filter inlet and it may cause the appliance to malfunction.

Emptying the Water Container

Condensed water is collected in the water container.

Empty the water container after every use. Not doing so will affect the drying performance.

NOTE

- If the water container is full, the icon glows and a chime will sound while the application is operating. If this occurs, empty the water container.
- If the appliance does not have an optional drain hose connected, the water container should be emptied. When the condensed water is drained out directly through the optional drain hose, there is no need to empty the water container.

1 Pull out the water container.

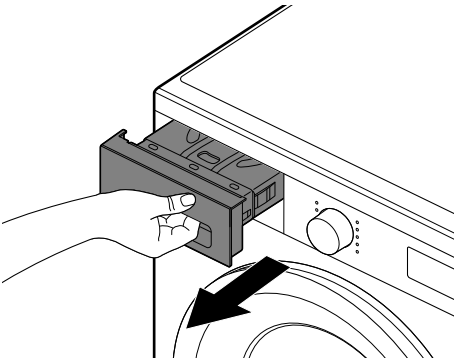

2 Empty the water container into the sink.

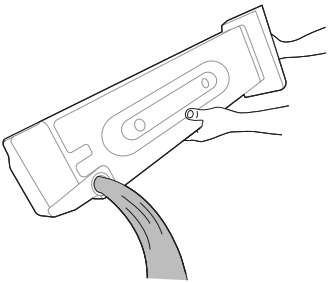

⚠ CAUTION

- Do not drink the condensed water or reuse it. It could be lead to health problems for people and animals.

3 Refit it back into the appliance.

- Push in the water container fully into the appliance until it is in place.

4 Press the **Start/Pause** button.

Ventilating inside the drum

To help prevent odours, leave the door slightly open to help air out the drum after use.

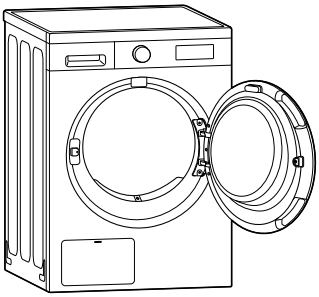

Cleaning the Appliance Periodically

Wiping the Moisture Sensor

This device senses the moisture level of the clothes during operation, which means it must be cleaned **once every six months** to remove any build-up of lime scale on the surface of the sensor.

Wipe the sensors inside the drum.

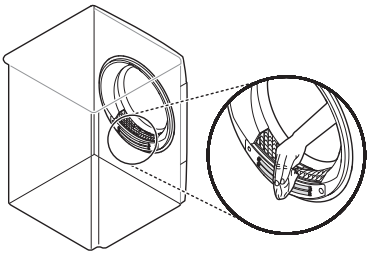

⚠ CAUTION

- Do not wipe the moisture sensor with abrasive materials. Always clean the sensor with a dry rough acrylic sponge.

Cleaning the Condenser

The condenser of the appliance must be cleaned **once every two weeks**. Please follow the instructions below for manually cleaning the condenser.

⚠ CAUTION

- To avoid physical injury and burns, do not touch or clean the condenser with bare hands.
- When cleaning the condenser, be careful not to damage the fins.

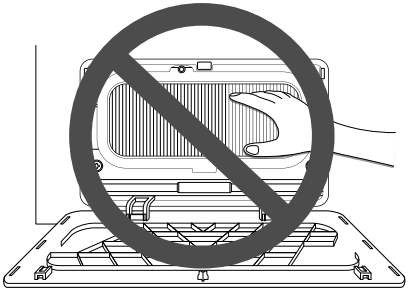

NOTE

- If drying performance deteriorates, open the condenser cover to check for foreign substances.

1 Press the top part of the access panel ❶ to open it.

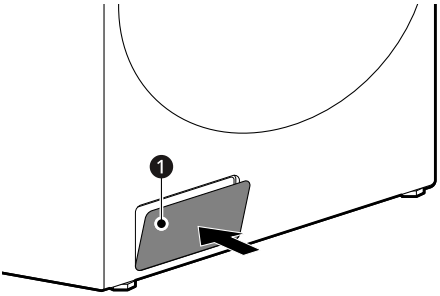

2 Turn the locks ❷ to release the condenser cover, and pull the cover to remove it.

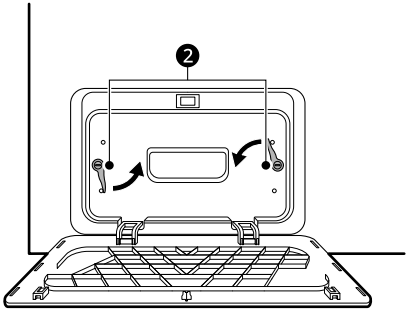

3 Clean the dust on the condenser using a vacuum cleaner or soft brush.

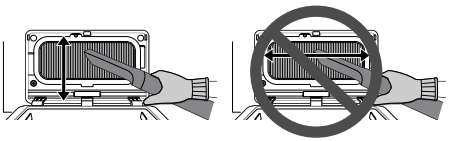

4 Fit the cover with the hole below.

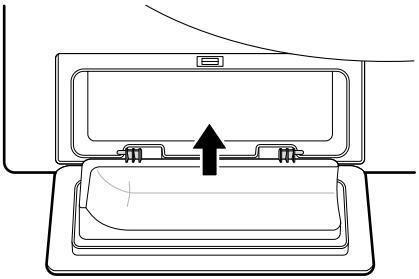

5 Reinsert and reassemble the condenser cover completely.

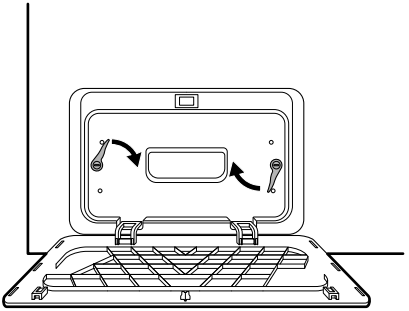

⚠ CAUTION

- If the condenser cover is not completely reassembled, the product will not work properly and may leak.

6 Close the access panel.

TROUBLESHOOTING

Errors and malfunctions may occur when operating the appliance. The following tables contain possible causes and notes for resolving an error message or malfunction. Read the tables below carefully in order to save time and money before calling the LG Electronics service centre.

Before Calling for Service

Your appliance is equipped with an automatic error-monitoring system to detect and diagnose problems at an early stage. If the appliance does not function properly or does not function at all, check the following tables before calling to LG Electronics service centre.

Error Messages

Symptoms	Possible Cause & Solution
E32 **HUMIDITY SENSOR ERROR**	**Humidity Sensor has malfunctioned.** • Unplug the power plug and call for service.
E33 **TEMPERATURE ERROR**	**Temperature Sensor has malfunctioned.** • Unplug the power plug and call for service.
E82 **PCB COMMUNICATION ERROR**	**Connection between PCB has malfunctioned.** • Unplug the power plug and call for service.
CL **Child Lock FUNCTION**	**The Child Lock function is on to prevent anyone from changing cycles or operating the dryer.** • Turn off the **Child Lock** function in the control panel. See **Child Lock** under **Extra Options and Functions**.

Operation

Symptoms	Possible Cause & Solution
Appliance will not turn on.	**Power cord is not properly plugged in.** • Make sure that the power plug is securely plugged into agrounded outlet matching the appliance's rating plate.
	House fuse is blown, circuit breaker has tripped, or poweroutage has occurred. • Reset circuit breaker or replace fuse. Do not increase fuse capacity. If the problem is a circuit overload, have it corrected by a qualified electrician.

Symptoms	Possible Cause & Solution
Appliance does not heat.	**House fuse is blown, circuit breaker has tripped, or power outage has occurred.** • Reset circuit breaker or replace fuse. Do not increase fuse capacity. If the problem is a circuit overload, have it corrected by a qualified electrician.
Water leaks.	**The water container hose or the optional drain hose is not connected correctly.** • Connect the water container hose or the optional drain hose correctly.
	The door is closed while clothes or foreign substance is caught in the door. • Check if clothes or foreign substance is caught in the door before using the appliance. If water leaks continuously, contact the LG Electronics Customer Information Centre.
Appliance runs and pauses by itself after the drying cycle finishes.	**This is how the Anti Crease function works.** • The function is designed to prevent creases that are formed when the clothes are not unloaded promptly after the drying cycle. When the function works, the appliance runs for 30 minutes.

Performance

Symptoms	Possible Cause & Solution
Clothes take too long to dry.	**Load is not properly sorted.** • Separate heavy items from lightweight items. Larger and heavier items take longer to dry. Light items in a load with heavy items can fool the sensor because the light items dry faster.
	Large load of heavy fabrics. • Heavy fabrics take longer to dry because they tend to retain more moisture. To help reduce and maintain more consistent drying times for large and heavy fabrics, separate these items into smaller loads of a consistent size.
	Appliance controls are not set properly. • Use the appropriate control settings for the type of load you are drying. Some loads may require an adjustment of the dry level setting for proper drying.
	Lint filter needs to be cleaned. • Remove the lint from the lint filter before every cycle. With the lint removed, hold the lint filter up to a light to see if it is dirty or clogged. With some loads that produce high amounts of lint, such as new bath towels, it may be necessary to pause the cycle and clean the filter during the cycle.

Symptoms	Possible Cause & Solution
Clothes take too long to dry.	**House fuse is blown, circuit breaker has tripped, or power outage has occurred.** • Reset circuit breaker or replace fuse. Do not increase fuse capacity. If the problem is a circuit overload, have it corrected by a qualified electrician.
	Appliance is overloaded. • Divide extra large loads into smaller loads for better drying performance and efficiency.
	Appliance is underloaded. • If you are drying a very small load, add a few extra items to ensure proper tumbling action. If the load is very small and you are using Sensor Dry programmes, the electronic control cannot properly sense the dryness of the load and may shut off too soon. Use Timed Drying programmes or add some extra wet clothes to the load.
Drying time is not consistent.	**Heat settings, load size, or dampness of clothing is not consistent.** • The drying time for a load will vary depending on the type of heat used (electric), the size of the load, the type of fabrics, the wetness of the clothes, and lint filter. Even an unbalanced load in the appliance can cause poor spinning, resulting in wetter clothes which will take longer to dry.
Greasy or dirty spots are left on clothes.	**Fabric softener is used incorrectly.** • When washing clothes that are to be dried in the appliance, use the correct amount of fabric softener as recommended by the manufacturer of the fabric softener.
	Clean and dirty clothes are being dried together. • Use the appliance to dry only clean items. Soil from dirty clothes can transfer to the clean clothes in the same or later loads.
	Clothes were not properly cleaned or rinsed before being placed in the appliance. • Stains on dried clothes could be stains that were not removed during the washing process. Make sure that clothes are being completely cleaned or rinsed according to the instructions for your washing machine and detergent. Some difficult soils may require pre-treating prior to washing.
Clothes are wrinkled.	**Clothes have dried too long (overdried).** • Over drying a load of clothes can lead to wrinkled clothes. Try a shorter drying time.
	Clothes have been left in the appliance for too long after cycle ends. • Unload clothing promptly when the cycle ends.
Clothes are shrinking.	**Garment care instructions are not being followed.** • To avoid shrinking your clothes, always consult and follow fabric care instructions. Some fabrics will naturally shrink when washed. Other fabrics can be washed but will shrink when dried in the appliance. Use a low or no heat setting.

Symptoms	Possible Cause & Solution
Lint is left on clothes.	**Lint filter has not been cleaned properly.** • Remove the lint from the lint filter after every cycle. With the lint removed, hold the lint filter up to a light to see if it is dirty or clogged. If it looks dirty, follow the cleaning instructions. With some loads that produce high amounts of lint, it may be necessary to clean the lint filter during the cycle.
	Clothes have not been sorted properly. • Some fabrics are lint producers (i.e., a fuzzy white cotton towel) and should be dried separately from clothes that are lint trappers (i.e., a pair of black linen pants).
	Appliance is overloaded. • Divide extra large loads into smaller loads for drying.
	Tissue, paper, etc., has been left in pockets. • Check pockets thoroughly before drying clothes.
Excess static in clothes after drying.	**Clothes have dried for too long (overdried).** • Overdrying a load of clothes can cause a buildup of static electricity. Adjust settings and use a shorter drying time, or use Sensor Dry programmes.
	Drying synthetics, permanent press, or synthetic blends. • These fabrics are naturally more prone to static buildup. Try using fabric softener, or use shorter Timed Drying time settings.
Clothes have damp spots after a Sensor Dry programme.	**Very large load or very small load. Single large item such as a blanket or comforter.** • If items are too tightly packed or too sparse the sensor may have trouble reading the dryness level of the load. Use a **Timed Dry** programme for very small loads. • Large, bulky items such as blankets or comforters can sometimes wrap themselves into a tight ball of fabric. The outside layers will dry and register on the sensors, while the inner core remains damp. When drying a single bulky item, it may help to pause the cycle once or twice and rearrange the item to unwrap and expose any damp areas. • To dry a few remaining damp items from a very large load or a few damp spots on a large item after a Sensor Dry programme has completed, empty the lint filter, then set a **Timed Dry** programme to finish drying the item(s).

Odours

Symptoms	Possible Cause & Solution
The appliance has an odour.	**Are you using the appliance for the first time?** • The smell is caused by rubber material that is attached to the appliance inside. This kind of smell is a rubber's own smell and disappears automatically after using the appliance several times.

Symptoms	Possible Cause & Solution
The appliance has an odour.	**Do you smell an odour during use?** • Do not exceed the manufacturer's recommended amount of detergent when washing clothes. Excess detergent can build up on clothing and cause odours. • Leaving clothes in the washer or dryer after the cycle ends can lead to odors. Unload clothing promptly when the cycle ends. • Keep lint filters clean. Clogged or dirty lint filters can cause odors. After cleaning the lint filter, allow it to dry completely before using it. • For ventless models, leave the dryer door open after drying, or use the magnetic door stop (on some models) to keep the door slightly ajar. • If the odor is coming from the washer, follow the instructions in the product manual to clean the washer tub/drum.

