LG
Life's Good

OWNER'S MANUAL

MICROWAVE OVEN

Please read this owner's manual thoroughly before operating.

KQ2 . 2***
(optional, please check model specification)

MFL40257839

www.lg.com

How the Microwave Function Works

Microwaves are a form of energy similar to radio, television waves, and ordinary daylight. Normally, microwaves spread outwards as they travel through the atmosphere and disappear without effect.
This oven, however, has a magnetron that is designed to make use of the energy in microwaves. Electricity, supplied to the magnetron tube, is used to create microwave energy.

These microwaves enter the cooking area through openings inside the oven. A tray is located inside the oven. Microwaves cannot pass through metal walls of the oven, but they can penetrate such materials as glass, porcelain and paper, the materials out of which microwave-safe cooking dishes are constructed.

Microwaves do not heat cookware, though cooking vessels will eventually get hot from the heat generated by the food.

A very safe appliance

Your Microwave oven, is one of the safest of all home appliances. When the door is opened, the oven automatically stops producing microwaves. Microwave energy is converted completely to heat when it enters food, leaving no "left over" energy to harm you when you eat your food.

CONTENTS

3 **IMPORTANT SAFETY INSTRUCTIONS**

7 **BEFORE USE**

7 Unpacking & Installing
9 Microwave-Safe Utensils
10 Control Panel
11 Setting Clock
11 Quick Start
11 Child Lock
11 Energy Saving

12 **HOW TO USE**

12 Timed Cooking
12 Microwave Power Levels
13 Aussie Cooking
13 Global Menu Instructions-Aussie Menu
15 French Cooking
15 Italian Cooking
15 Middle Eastern Cooking
16 Global Menu Instructions-French Menu
18 Global Menu Instructions-Italian Menu
19 Global Menu Instructions-Middle Eastern Menu
21 Melt
21 Soften
22 Auto Defrost
22 Auto Defrost Menu Instructions
23 Express Defrost
23 Bread Defrost

24 **FOOD CHARACTERISTICS & MICROWAVE COOKING**

26 **QUESTIONS & ANSWERS**

27 **TECHNICAL SPECIFICATIONS**

IMPORTANT SAFETY INSTRUCTIONS

Please keep for future reference. Read and follow all instructions before using your oven to prevent the risk of fi electric shock, personal injury, or damage when using the oven. This guide does not cover all possible conditions that may occur. Always contact your service agent or manufacturer about problems that you do not understand.

WARNING

This is the safety alert symbol. This symbol alerts you to potential hazards that can kill or hurt you and others.
All safety messages will follow the safety alert symbol and either the word "WARNING" or "CAUTION".
These word means :

WARNING

This symbol will alert you to hazards or unsafe practices which could cause serious bodily harm or death.

CAUTION

This symbol will alert you to hazards or unsafe practices which could cause bodily injury or property damage.

WARNING

1 Do not attempt to tamper with, or make any adjustments or repairs to the door, door seals, control panel, safety interlock switches or any other part of the oven which would involve the removal of any cover protecting against exposure to of service technician.the microwave oven are faulty. Repairs should only be undertaken by a qualified service technician.

- Unlike other appliances, the microwave oven is a high-voltage and a highelectrical-current piece of equipment. Improper use or repair could result in harmful exposure to excessive microwave energy or in electric shock.

2 Do not use the oven for the purpose of dehumidification.(ex. Operating themicrowave oven with wet newspapers, clothes, toys, electric devices, pet or child etc.)

- It can be the cause of serious damage to safety such as a fire, a burn or a sudden death due to an electric shock.

3 This appliance is not intended for use by persons (including children) with reduced physical, sensory or mental capabilities, or lack of experience and knowledge, unless they have been given supervision or instruction concerning use of the appliance by a person responsible for their safety.

- Improper use may cause damage such as a fire, electric shock or burn.

4 Accessible parts may become hot during use. Young children should be kept away.

- They may get a burn.

5 Liquids or other foods must not be heated in sealed containers since they are liable to explode. Remove the plastic wrapping from food before cooking or defrosting. Note though that in some cases food should be covered with plastic film, for heating or cooking.

- They could burst.

6 Be certain to use proper accessories on each operation mode.

- Improper use could result in damage to your oven and accessories, or could make spark and a fire.

7 The children should not allow to play with accessories or hang down from the door handle.

- They may get hurt.

8 If the door or door seals are damaged, the oven must not be operated until it has been repaired by a competent person.

9 It is hazardous for anyone other than a competent person to carry out any service or repair operation that involves the removal of a cover which gives protection against exposure to microwave energy.

10 When the appliance is operated in the combination mode, children should only use the oven under adult supervision due to the temperatures generated.

⚠ CAUTION

1 You cannot operate your oven with the door open due to the safety interlocks built into the door mechanism. It is important not to tamper with the safety interlocks.

- It could result in harmful exposure to excessive microwave energy. (Safety interlocks automatically switch off any cooking activity when the door is opened.)

2 Do not place any object (such as kitchen towels, napkins, etc.) between the oven front face and the door or allow food or cleaner residue to accumulate on sealing surfaces.

- It could result in harmful exposure to excessive microwave energy.

3 Do not operate your oven if it is damaged. It is particularly important that the oven door closes properly and that there is no damage to the:(1) door(bent), (2) hinges and latches (broken or loosened), (3) door seals and sealing surfaces.

- It could result in harmful exposure to excessive microwave energy.

4 Please ensure cooking times are correctly set, Small amounts of food require shorter cooking or heating time.

- Over cooking may result in the food catching on fire and subsequent damage to your oven.

5 When heating liquids, e.g. soups, sauces and beverages in your microwave oven,

* Avoid using straight sided containers with narrow necks.
* Do not overheat.
* Stir the liquid before placing the container in the oven and again halfway through the heating time.
* After heating, let it stand in the oven for a short time; stir or shake it again carefully and check the temperature of it before consuming to avoid burns (especially, contents of feeding bottles and baby food jars).
* Microwave heating of beverages can result in delayed eruptive boiling, therefore care has to be taken when handling the container.

6 An exhaust outlet is located on the top, bottom or side of the oven.
Don't block the outlet.

- It could result in damage to your oven and poor cooking results.

7 Do not operate the oven when empty. It is best to leave a glass of water in the oven when not in use. The water will safely absorb all microwave energy, if the oven is accidentally started.

- Improper use could result in damage to your oven.

8 Do not cook food wrapped in paper towels, unless your cook book contains instructions for the food you are cooking. And do not use newspaper in place of paper towels for cooking.

- Improper use can cause an explosion or a fire.

9 Do not use wooden containers and ceramic containers that have metallic (e.g. gold or silver) inlays. Always remove metal twist ties. Check that the utensils are suitable for use in microwave ovens before use.

Metallic containers for food and beverages are not allowed during microwave cooking.

- They may heat-up and char. Metal objects in particular may arc in the oven, which can cause serious damage.

10 Do not use recycled paper products.
- They may contain impurities which may cause sparks and/or fires when used in cooking.

11 Do not rinse the tray and rack by placing it in water just after cooking. This may cause breakage or damage.
- Improper use could result in damage to your oven.

12 Be certain to place the oven so the front of the door is 8 cm or more behind the edge of the surface on which it is placed, to avoid accidental tipping of the appliance.
- Improper use could result in bodily injury and oven damage.

13 Before cooking, pierce the skin of potatoes, apples or any such fruit or vegetable.
- They could burst.

14 Do not cook eggs in their shell. Eggs in their shell and whole hardboiled eggs should not be heated in microwave ovens since they may explode, even after microwave heating has ended.
- Pressure will build up inside the egg which will burst.

15 Do not attempt deep fat frying in your oven.
- This could result in a sudden boil over of the hot liquid.

16 If smoke is observed (or emitted), switch off or unplug the appliance and keep the door closed in order to stifle any flame.
- It can cause serious damage such as a fire or electric shock.

17 When food is heated or cooked in disposable containers made of plastic, paper or other combustible materials, keep an eye on the oven and check it frequently.
- Your food may be poured due to the possibility of container deterioration, which also can cause a fire.

18 The temperature of accessible surfaces may be high when the appliance is operating. Do not touch the oven door, outer cabinet, rear cabinet, oven cavity, accessories and dishes during grill mode, convection mode and auto cook operations, before clearing make sure they are not hot.
- As they will become hot, there is the danger of a burn unless wearing thick culinary gloves .

19 The oven should be cleaned regularly and any food deposits should be removed.
Failure to maintain the oven in a clean condition could lead to deterioration of the surface that could adversely affect the life of the appliance and possibly result in a hazardous situation.

20 Only use the temperature probe recommended for this oven.
- You can not ascertain that the temperature is accurate with an unsuitable temperature probe.

21 Follow exact directions given by each manufacturer for their popcorn product. Do not leave the oven unattended while the corn is being popped. If corn fails to pop after the suggested times, discontinue cooking. Never use a brown paper bag for popping corn. Never attempt to pop leftover kernels.
- Overcooking could result in the corn catching a fire.

22 This appliance must be earthed.
The wires in the mains lead are colored in accordance with the following codes

BLUE ~ Neutral

BROWN ~ Live

GREEN & YELLOW ~ Earth

As the colours of the wires in the mains lead of this appliance may not correspond with the coloured markings identifying the terminals in your plug proceed as follows:

The wire which is colored BLUE must be connected to the terminal which is marked with the letter N or Colored BLACK. The wire which is colored BROWN must be connected to the terminal which is marked with the letter L or colored RED. The wire which is colored GREEN & YELLOW or GREEN must be connected to the terminal which is marked with the letter E or ⏚ .

If the supply cord is damaged, it must be replaced by the manufacturer, a service agent or a similarly qualified person in order to avoid potential hazards.

- Improper use may cause serious electric damage.

23 This oven should not be used for commercial catering purposes.

- Improper use could result in damage to your oven.

24 The connection may be achieved by having the plug accessible or by incorporating a switch in the fixed wiring in accordance with the wiring rules.

- Using improper plug or switch can cause an electric shock or a fire.

25 Children should be supervised to ensure that they do not play with the appliance. Cleaning and user maintenance shall not be made by children without supervision.

26 The appliance is not intended to be operated by means of an external timer or separate remote-control system.

27 Only use utensils that are suitable for use in microwave ovens.

28 This microwave oven must not be placed in a cabinet.

29 This microwave oven is intended to be used freestanding.

30 Keep the appliance and its cord out of reach of children less than 8 years.

31 The door or the outer surface may get hot when the appliance is operating.

32 This appliance is intended to be used in household and similar applications such as

- staff kitchen areas in shops, offices and other working environments
- farm houses
- by clients in hotels, motels and other residential environments
- bed and breakfast type environments

33 The microwave oven is intended for heating food and beverages. Drying of food or clothing and heating of warming pads, slippers, sponges, damp cloth and similar may lead to risk of injury, ignition or fire.

34 The contents of feeding bottles and baby food jars are to be stirred or shaken and the temperature checked before consumption, in order to avoid burns.

35 According to the installation requirements set, otherwise the impact of heat, prone to danger.

36 This appliance is not intended for use by persons (including children) with reduced physical, sensory or mental capabilities, or lack of experience and knowledge, unless they have been given supervisionor instruction concerning use of the appliance by a person responsiblefor their safety. Children should be supervised to ensure that they do not play with the appliance.

37 Steam cleaner is not to be used.

BEFORE USE

Unpacking & Installing

By following the basic steps on these two pages you will be able to quickly check that your oven is operating correctly. Please pay particular attention to the guidelines on where to install your oven. When unpacking your oven make sure you remove all accessories and packing materials. Check to make sure that your oven has not been damaged during shipping.

1 Unpack your oven and place it on a flat level surface.

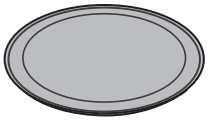

GLASS TRAY

ROTATING RING

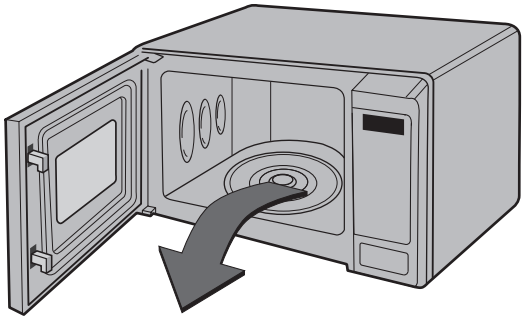

2 Place the oven on the level location of your choice with more than 85cm height but make sure there is at least 20cm of space on the top and 10cm at the rear for proper ventilation.

The front of the oven should be at least 8cm from the edge of the surface to prevent tipping.

An exhaust outlet is located on bottom or side of the oven. Blocking the outlet can damage the oven.

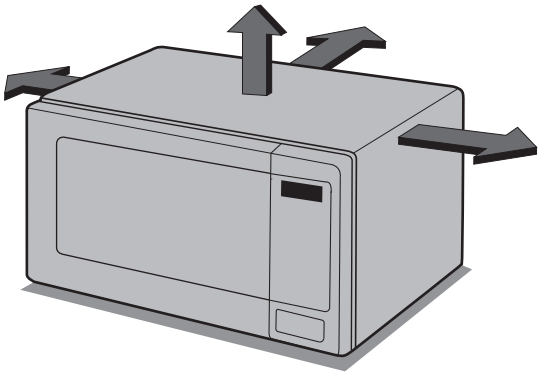

NOTE

- THIS OVEN SHOULD NOT BE USED AS A BUILT IN OVEN OR FOR COMMERCIAL CATERING PURPOSES.

3 Plug your oven into a standard household socket. Make sure your oven is the only appliance connected to the socket.
If your oven does not operate properly, unplug it from the electrical socket and then plug it back in.

4 Open your oven door by pressing the door open button. Place the rotating ring inside the oven and place the glass tray on top.

5 Fill a **microwave safe container** with 300 ml (1/2 pint) of water. Place on the glass tray and close the oven door.
If you have any doubts about what type of container to use please refer to Page 9.

6 Press the **STOP/CLEAR** button, and press the **START/QUICK START** button one time to set 30 seconds of cooking time.

7 The **DISPLAY** will count down from 30 seconds.
When it reaches 0 it will BEEP several times repeatedly until the door is opened. Open the oven door
and test the temperature of the water.
If your oven is operating the water should be warm.
Be careful when removing the container it may be hot.

YOUR OVEN IS NOW INSTALLED

8 The contents of feeding bottles and baby food jars must be stirred or shaken and the temperature checked before consumption in order to avoid burns.

Microwave-Safe Utensils

Never use metal or metal trimmed utensils in using microwave function

Microwaves cannot penetrate metal. They will bounce off any metal object in the oven and cause arcing, an alarming phenomenon that resembles lightning. Most heat resistant non metallic cooking utensils are safe for use in your oven. However, some may contain materials that render them unsuitable as microwave cookware. If you have any doubts about a particular utensil, there's a simple way to find out if it can be used in the microwave.
Place the utensil in question next to a glass bowl filled with water in using microwave function. Microwave at power HIGH for 1 minute. If the water heats up but the utensil remains cool to the touch, the utensil is microwave-safe. However, if the water does not change temperature but the utensil becomes warm, microwaves are being absorbed by the utensil and it is not safe for use in using microwave function. You probably have many items on hand in your kitchen right now that can be used as cooking equipment in the microwave. Just read through the following checklist.

Dinner plates

Many kinds of dinnerware are microwave-safe. If in doubt consult the manufacturer's literature or perform the microwave test.

Glassware

Glassware that is heat-resistant is microwave-safe. This would include all brands of oven tempered glass cookware. However, do not use delicate glassware, such as tumblers or wine glasses, as these might shatter as the food warms.

Plastic storage containers

These can be used to hold foods that are to be quickly reheated. However, they should not be used to hold foods that will need considerable time in the oven as hot foods will eventually warp or melt plastic containers.

Paper

Paper plates and containers are convenient and safe to use in using microwave function, provided that the cooking time is short and foods to be cooked are low in fat and moisture. Paper towels are also very useful for wrapping foods and for lining baking trays in which greasy foods such as bacon are cooked. In general, avoid coloured paper products as the colour may run. Some recycled paper products may contain impurities which could cause arcing or fires when used in the microwave.

Plastic cooking bags

Provided they are made specially for cooking, cooking bags are microwave safe. However, be sure to make a slit in the bag so that steam can escape. Never use ordinary plastic bags for cooking in using microwave function, as they will melt and rupture.

Plastic microwave cookware

A variety of shapes and sizes of microwave cookware are available. For the most part, you can probably use items you already have on hand rather than investing in new kitchen equipment.

Pottery, stoneware and ceramic

Containers made of these materials are usually fine for use in using microwave function, but they should be tested to be sure.

CAUTION

- Some items with high lead or iron content are not suitable as cooking utensils.
- Utensils should be checked to ensure that they are suitable for use in the microwave.

Control Panel

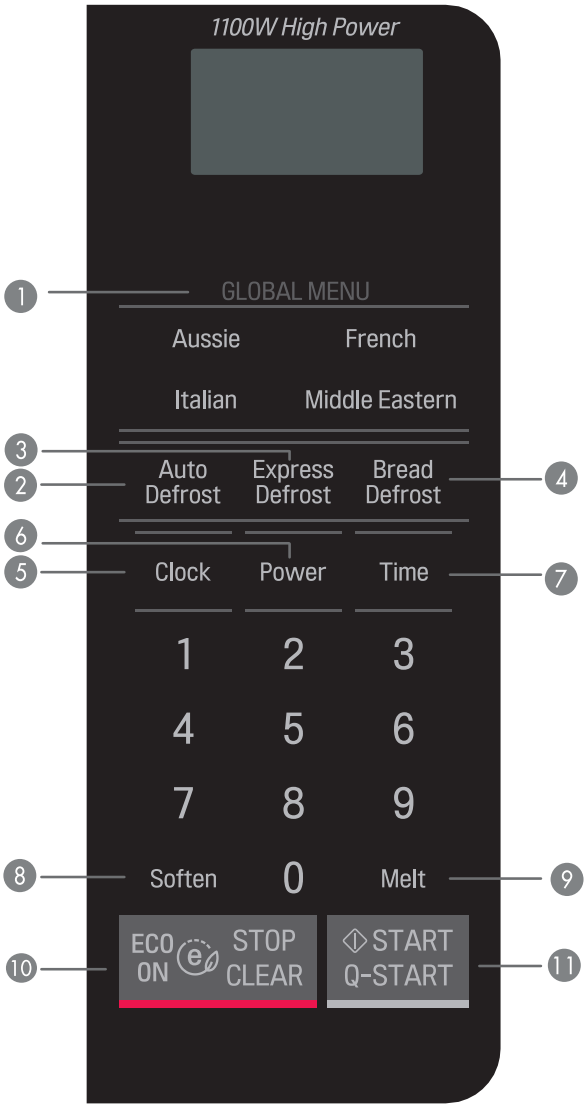

Part
1 **GLOBAL MENU** See from page 13 "Aussie Cooking"
2 **AUTO DEFROST** See page 22 "Auto Defrost"
3 **EXPRESS DEFROST** See page 23 "Express Defrost"
4 **BREAD DEFROST** See page 23 "Bread Defrost"
5 **CLOCK** See page 11 "Setting Clock"
6 **POWER** See page 12"Timed Cooking"
7 **TIME** See page 12 "Timed Cooking"
8 **SOFTEN** See page 21 "Soften"
9 **MELT** See page 21 "Melt"
10 **STOP / CLEAR / ECO ON** • Stop over and clear all entries except time of day. • ECO ON feature saves energy .
11 **START / QUICK START** • In order to start cooking which is selected, press button one time. • The quick start feature allows you to set 30 seconds intervals of HIGH power cooking with a touch of the quick start button.

SETTING CLOCK

When your oven is plugged in for the first time or when power resumes after a power interruption, the numbers in the display reset to "0".

Example:To set 11:11 .

1. Press **ECO ON / STOP.**

Clock

2. Press **CLOCK** one time. '12:00' will show in the display.

1 1 1 1

1. Npcqq **/ */ */ */** display shows '11:/ / '

2. Press **START.**

QUICK START

The QUICK START feature allows you to set 30 seconds intervals of HIGH power cooking with a touch of the START button.

Example: Set 2 minutes of cooking on high power.

1.

Time of day.

2.

To select 2minutes on high power.

Press the START button four times

The oven will start before you have finished the fourth press.

During QUICK START cooking, you can extend the cooking time up to 10 minutes by repeatedly pressing the START key.

CHILD LOCK

This is a unique safety feature that prevents unwanted oven operations. Once the CHILD LOCK is set, no cooking can take place.

To set the child lock

Or

0

Touch and hold **STOP/CLEAR** or **0**, until L appears in the display and two beeps are heard. If the time of day was already set, the time of day will disappear on the display window.

If the CHILD LOCK was already set and you touch another cooking pad, the word L shows in the display. You can cancel the CHILD LOCK according to below procedure.

To cancel the child lock

Or

0

Touch and hold **STOP/CLEAR** or **0**, pad until L disappears in the display.

After the CHILD LOCK is turned off, the time of day will return to the display window. The oven will operate normally.

ENERGY SAVING

ECO ON feature saves energy by turning off the display.This feature only operates when the ECO ON / STOP button is pressed and then cancels when the door is opened or any button is pressed.

To set the ECO ON

1. Press **ECO ON / STOP** The display will go out and ECO ON will be active.

Press the ECO ON / STOP or any other button to cancel this feature when it is on.

HOW TO USE

TIMED COOKING (manual cooking)

This function allows you to cook food for a desired time. There are 10 power levels available. The example below shows how to set 80% power level for the desired time.

Example:To cook food on 80% Power (Power8) for 5 minutes 30 seconds

1. Press **STOP/CLEAR.**

2. Press **TIME.**

5 3 0

3. Enter 5 minutes 30 seconds by touching **[5], [3]**,and **[0].**

Power

4. Press **POWER.** P-HI appears in the display. This is to tell you that the oven is set on HI unless a different power setting is chosen.

8

5. Press **8.** To select power level 80%. Display shows **P-80.**

6. Press **START/Q-START.**

When cooking is complete, four short beeps will sound. The word **End** shows in the display window. 'End' remains in the display and 3 beeps will sound every minute until the door is opened, or any button is pressed.

NOTE:
If you do not select the power level, the oven will operate at power HIGH. To set HI-POWER cooking, skip step 2 above.

2 STAGE TIMED COOKING

For Two Stage cooking, repeat timed cooking steps 2 and 3 from the above example before pressing the START button. The 2nd stage will continue on from the 1st stage by applying the set power level and set time automatically.

MICROWAVE POWER LEVELS

Your microwave oven is equipped with ten power levels to give you maximum flexibility and control over cooking. The adjacent table will give you some idea of which foods are prepared at each of the various power levels.

* The adjacent chart shows the power level settings for your oven.

MICROWAVE POWER LEVEL CHART

Power Level	Use
High (100%)	* Boiling water. * Browning ground beef. * Making candy. * Cooking poultry pieces, fish, & vegetables. * Cooking tender cuts of meat.
90	* Reheating rice, pasta, & vegetables.
80	* Reheating prepared foods quickly. * Reheating sandwiches.
70	* Cooking egg, milk and cheese dishes. * Cooking cakes and breads. * Melting chocolate.
60	* Cooking veal. * Cooking whole fish. * Cooking puddings and custard.
50	* Cooking ham, whole poultry and lamb. * Cooking rib roast and sirloin tip.
40	* Thawing meat, poultry and seafood.
30	* Cooking less tender cuts of meat. * Cooking pork chops and roast.
20	* Taking chill out of fruit. * Softening butter.
10	* Keeping casseroles and main dishes warm. * Softening butter and cream cheese.

AUSSIE COOKING

Aussie Cooking allows you to cook most of your favorite food easily by selecting the food type and the weight of the food.

To cook 3 Jacket Potato.

1. Press **ECO ON / STOP.**

Aussie

2. Press **Aussie** once. display shows ‘Ac-1’,

3

1. Npcqq **2** display shows “1”

4. Press **START.**

GLOBAL MENU INSTRUCTIONS - AUSSIE MENU

Code	Menu	Weight Limit	Initial Temperature	Instructions	Standing Time (minutes)
Ac-1	**Jacket Potato**	1 - 4 Potatoes (1 potato = 200g)	Room	1. Choose medium sized potatoes 180 -220g. Wash and dry potatoes. 2. Pierce potatoes several times with a fork. 3. Place potatoes in the oven. Choose the menu and press start to cook. 4. After cooking, stand covered with aluminum foil for 5 minutes.	5
Ac-2	**Vegetable**	1 - 4 cups	Room	1. Place vegetables in a microwave-safe bowl. 2. Add the amount of water according to the quantity. ** 0.2kg -0.4kg : 2 tablespoons of water ** 0.6kg -0.8kg : 4 tablespoons of water 3. Cover with plastic wrap. Place food in the oven. 4. After cooking, stir for 3-4 seconds. Stand covered for 3 minutes.	3
Ac-3	**Dinner Plate**	1 - 2 servings	Refrigerated	1. Place leftover food (0.4-0.5kg of meat, chicken, mashed potato,vegetable etc.) on a microwave--safe dish. 2. Cover with plastic wrap and vent. 3. Place food in the oven. Choose the menu and weight, press start to cook. 4. After cooking,stir and stand covered for 3 minutes.	3
Ac-4	**Porridge**	1-4 servings	Refrigerated	(1 serving / 2 servings / 3 servings / 4 servings) Oats package (30-40g): 1 package / 2 packages / 3 packages / 4 packages Cold Milk: 3/4 cup / 1 1/2 cup / 2 1/4 cups / 3 cups 1.Place oats and milk in a deep and large microwave-safe bowl. Do not cover. 2. Place food in the oven. Choose the menu and press start to cook. 3. After heating, stir and stand for 1 minutes.	1

GLOBAL MENU INSTRUCTIONS - AUSSIE MENU

<table>
<tr><th>Code</th><th>Menu</th><th>Weight Limit</th><th>Initial Temperature</th><th>Instructions</th><th>Standing Time (minutes)</th></tr>
<tr><td>Ac-5</td><td>Bacon</td><td>1 ~ 2 thin rashers</td><td>Refrigerated</td><td>1. Place rashers between 2 sheets of paper towel on a microwave-safe dish.
2. Place food in the oven. Choose the menu and press start to cook.
3. After cooking, check the result. If you like the bacon a little more cooked, return to the oven and cook for 20 seconds on Microwave 900W.</td><td></td></tr>
<tr><td>Ac-6</td><td>Scrambled Egg</td><td>2, 4, 6 or 8 eggs</td><td>Refrigerated</td><td>Beat eggs in a coffee mug or cereal bowl and cover with plastic wrap. Stir at beep, and continue cooking. Stir before serving. (Optional: Add 1 tbsp of milk and 1 tsp of butter per one egg.)</td><td></td></tr>
<tr><td>Ac-7</td><td>Chicken Nuggets</td><td>113 or 227g</td><td>Frozen, Precooked</td><td>Place in a single layer around the edge of a dinner plate.</td><td></td></tr>
<tr><td>Ac-8</td><td>Casserole</td><td>1 - 4 serves</td><td>Refrigerated</td><td><u>Tuna & Noodle</u>
<table>
<tr><th>Ingredients</th><th>1 serve</th><th>2 serves</th><th>3 serves</th><th>4 serves</th></tr>
<tr><td>Noodles(pasta),boiled)</td><td>140 g</td><td>280 g</td><td>420 g</td><td>560 g</td></tr>
<tr><td>Cream of Mushroom Soup</td><td>140 g</td><td>280 g</td><td>420 g</td><td>560 g</td></tr>
<tr><td>Can or equivalent, Starkist Chunk Light Tuna, in spring water, drained</td><td>60 g</td><td>120 g</td><td>180 g</td><td>240 g</td></tr>
<tr><td>Milk</td><td>1/2 cup</td><td>1 cup</td><td>1 1/2 cups</td><td>2 cups</td></tr>
</table>
1. Add all ingredients in a deep and large bowl and mix well. Cover with plastic wrap and vent.
2. Place food in the oven. Choose the menu and press start to cook. Stir at least twice during cooking.
3. After cooking, stir and stand for 3 minutes.

<u>Beef Stroganoff</u>
<table>
<tr><th>Ingredients</th><th>1 serve</th><th>2 serves</th><th>3 serves</th><th>4 serves</th></tr>
<tr><td>Rump steak, cubed</td><td>250 g</td><td>500 g</td><td>750 g</td><td>1000 g</td></tr>
<tr><td>Plain flour</td><td>2 tbsp</td><td>1/4 cup</td><td>1/3 cup</td><td>1/2 cup</td></tr>
<tr><td>Small onion, finely chopped</td><td>1/2</td><td>1</td><td>1 1/2</td><td>1</td></tr>
<tr><td>Tomato puree</td><td>1/2 ts</td><td>1 tbsp</td><td>1 1/2 tbsp</td><td>2 tbsp</td></tr>
<tr><td>Beef stock</td><td>1/2 cup</td><td>1 cup</td><td>1 cup</td><td>1 1/2 cups</td></tr>
<tr><td>Red wine</td><td>60 ml</td><td>60 ml</td><td>60 ml</td><td>60 ml</td></tr>
<tr><td>Mushroom, sliced</td><td>25 g</td><td>50 g</td><td>75 g</td><td>100 g</td></tr>
<tr><td>Sour cream</td><td>1/4 cup</td><td>1/2 cup</td><td>3/4 cup</td><td>1 cup</td></tr>
<tr><td>Salt, Pepper</td><td colspan="4"></td></tr>
</table>
1. Toss steak with plain flour, salt and pepper in a flat dish until coated. Place steak, left flour, chopped onion, puree, beef stock, red wine and mushroom into a deep and large bowl. Cover with plastic wrap and vent.
2. Place food in the oven. Choose the menu and press start to cook. Stir at least twice during cooking.
3. After cooking, add sour cream and stir and stand for 3 minutes. Serve hot with boiled rice.</td><td>2 - 3

2 - 3</td></tr>
</table>

FRENCH COOKING

FRENCH COOKING allows you to cook most of your favorite food easily by selecting the food type.

Example: To cook 1.5kg Ratatouille.

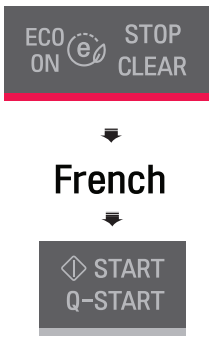

1. Touch **STOP/CLEAR.**
2. Touch **French** once.
   'Fc-1' appears in the display.
3. Touch **START/Q-START.**

ITALIAN COOKING

ITALIAN COOKING allows you to cook most of your favorite food easily by selecting the foodt ype.

Example: To cook 1.5kg Stuffed pepper.

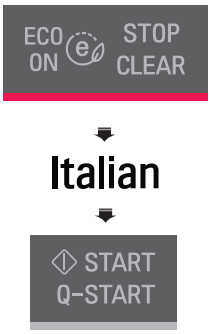

1. Touch **STOP/CLEAR.**
2. Touch **Italian** four times.
   'Ic-4' appears in the display.
3. Touch **START/Q-START.**

MIDDLE EASTERN COOKING

MIDDLE EASTERN COOKING allows you to cook most of your favorite food easily by selecting the food type.

Example: To cook 1.0kg Dolma.

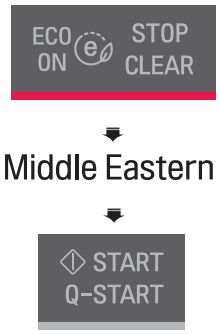

1. Touch **STOP/CLEAR.**
2. Touch **Middle Eastern** twice.
   'Ec- 2' appears in the display.
3. Touch **START/Q-START.**

GLOBAL MENU INSTRUCTIONS - FRENCH MENU

Code	Menu	Weight Limit	Initial Temperature	Instructions	Utensil
Fc-1	**Ratatouille**	1.5kg	Room	**Ingredients** 1 onion, cut into chunks 1 eggplant, cut into chunks 1 zucchini, cut into chunks 1 colored sweet pepper, cut into chunks 3 tomatoes, chopped 1 tablespoon tomato paste 2 garlic cloves, crushed 1 tablespoon fresh greens, chopped 2 tablespoons vinegar 1 teaspoon sugar Salt and pepper to taste 1. Add all ingredients in a deep and large bowl and mix well. Cover with plastic wrap and vent. 2. Place food in the oven. Choose the menu and press start to cook. Stir at least twice during cooking.	Microwave-safe bowl
Fc-2	**Stuffed Tomatoes**	1.2kg	Room	**Ingredients** 4 medium tomatoes Salt and pepper to taste Stuffing 1. Cut tops off tomatoes to form hats and remove seeds, taking care not to pierce flesh or skin. Then sprinkle each tomatoes with salt and pepper. 2. Fill tomatoes with stuffing and replace hat. 3. Place stuffed tomatoes on a dish and cover with plastic wrap. 4. Place food in the oven. Choose the menu and press start to cook. **※ Stuffing** 400g ground beef ½ cup bread crumbs 2 garlic cloves, crushed 1 tablespoon Dijon mustard 1 tablespoon dried greens 1 tablespoon parmesan cheese 1. Add all ingredients in a bowl, mix well, and cover with plastic wrap. 2. Place food in the oven. Cook for 3~5 minutes on Microwave 1100 watts. Stir at least once during cooking.	Microwave-safe dish
Fc-3	**French Onion Soup**	1.5kg	Room	**Ingredients** 4 onions, thinly sliced 50g butter 1 teaspoon white sugar 1 tablespoon all-purpose flour 3 cups beef stock ½ cup red wine 1cup grated cheese 8 slices of toasted French bread 1. Cook onions in a frying pan with butter and sugar until golden brown. 2. Add cooked onions and flour in a deep and large bowl, mix well and add beef stock and red wine. Cover with plastic wrap and vent. 3. Place food in the oven. Choose the menu and press start to cook. Stir at least twice during cooking. 4. After cooking, stir and ladle soup into serving bowls. 5. Place 1 slice toasted bread on top of the soup in each bowl and spread cheese on toasted bread. Cook for 1~2 minutes on Microwave 1100 watts until cheese melted.	Microwave-safe bowl

GLOBAL MENU INSTRUCTIONS - FRENCH MENU

Code	Menu	Weight Limit	Initial Temperature	Instructions	Utensil
Fc-4	**Spinach Cream Soup**	1.2kg	Room	**Ingredients** 600g vegetable purée 1 ½ cups chicken stock 2 tablespoons all-purpose flour 2 tablespoons butter 1 cup cream Nutmeg, salt and pepper to taste 1. Add all ingredients in a deep and large bowl and mix well. Cover with plastic wrap and vent. 2. Place food in the oven. Choose the menu and press start to cook. Stir at least twice during cooking. ※ **Vegetable purée** 400g spinach, chopped 2 onions, chopped 4 tablespoons water 1. Place vegetables in a microwave-safe bowl. 2. Add water and cover with plastic wrap. 3. Place food in the oven. Cook for 7~9 minutes on Microwave 1100 watts. 4. After cooking, blend cooked vegetables using a blender or food processor until the purée is smooth and uniform in texture.	Microwave-safe bowl
Fc-5	**Stuffed Mushrooms**	0.5kg	Room	**Ingredients** 15~20 champignon mushrooms, stemmed Stuffing 50g grated cheese 1. Remove stem of each mushroom and put on a dish. 2. Fill each mushroom cap with stuffing. 3. Add cheese on top of each stuffed mushroom. 4. Place food on the rack. Choose the menu and press start to cook. ※ **Stuffing** 2 tablespoons butter Remaining mushroom stems, chopped ¼ cup red wine 30g bread crumbs 3 tablespoons fresh greens, chopped ½ cup cream Salt and pepper to taste 1.Cook mushroom stems in a frying pan with butter. Add red wine, bread crumbs and parsley, mix well. 2. Add cream and simmer on low heat until cream has thickened. Season with salt and pepper.	Microwave-safe dish
Fc-6	**Chicken Legs with Prunes**	1.2kg	Room	**Ingredients** 1 onion, sliced 500g chicken legs 15 pitted prunes, halved Salt and pepper to taste 1 carrot, sliced 1 cup chicken stock 1. Add all ingredients in a deep and large bowl and mix well. Cover with plastic wrap and vent. 2. Place food in the oven. Choose the menu and press start to cook. Stir at least twice during cooking.	Microwave-safe bowl

GLOBAL MENU INSTRUCTIONS - ITALIAN MENU

Code	Menu	Weight Limit	Initial Temperature	Instructions	Utensil
Ic-1	**Spaghetti Bolognaise**	1.0kg	Room	**Ingredients for bolognaise sauce** 1 tablespoon olive oil 1 onion, chopped 1 garlic clove, crushed 400g ground beef 100g tomato paste 2 chopped tomatoes 1 tablespoon dried greens Salt and pepper to taste **Ingredients for pasta** 150g pasta, cooked as package direction 1 tablespoon parmesan cheese 1. Add all ingredients of the bolognaise sauce in a deep and large bowl and mix well. cover with plastic wrap and vent. 2. Place food in the oven. Choose the menu and press start to cook. Stir at least twice during cooking. 3. After cooking, stir and add bolognaise sauce to cooked pasta and garnish with parmesan cheese or as desired before serving.	Microwave-safe bowl
Ic-2	**Spaghetti Carbonara**	0.4kg	Room	**Ingredients for carbonara sauce** 100g smoked bacon, chopped 1 garlic clove, crushed ½ cup cream 4 egg yolks 100g parmesan cheese Salt and pepper to taste **Ingredients for pasta** 150g pasta, cooked as package direction 1 tablespoon parmesan cheese 1. Cook bacon in a lightly oiled frying pan with garlic until lightly browned and drain away excess fat. 2. Add cooked bacon, cream, egg yolks, parmesan cheese, salt and pepper in a deep and large bowl and mix well. Cover with plastic wrap and vent. 3. Place food in the oven. Choose the menu and press start to cook. 4. After cooking, stir and add carbonarasauce to cooked pasta and garnish with parmesan cheese or as desired before serving.	Microwave-safe bowl
Ic-3	**Eggplant with Tomato and Cheese**	1.0kg	Room	**Ingredients** 1~2 eggplants 1~2 tomatoes Salt and pepper to taste 100g grated cheese 1. Cut eggplants and tomatoes into 1.5cm slices and season with salt and pepper. 2. Layer the eggplants and tomatoes on a dish and add cheese on top of each tomatoes. 3. Place food on the rack. Choose the menu and press start to cook.	Microwave-safe dish

GLOBAL MENU INSTRUCTIONS - ITALIAN MENU

Code	Menu	Weight Limit	Initial Temperature	Instructions	Utensil
Ic-4	Stuffed Pepper	1.5kg	Room	**Ingredients** 4 colored sweet peppers 2 canned tuna 2 piece dry black bread, chopped 1 garlic clove, crushed 100g parmesan cheese Salt and pepper to taste 200g tomato puree 1. Cut tops off peppers, remove seeds. 2. Mix tuna, bread, garlic, parmesan cheese, salt and pepper. 3. Stuff peppers with tuna mixture and place stuffed peppers on a dish. 4. Add tomato puree on top and cover with plastic wrap. 5. Place food in the oven. Choose the menu and press start to cook.	Microwave-safe dish
Ic-5	Risotto	1.2kg	Room	**Ingredients** 200grisotto rice 1 ½ cups water or stock ½ cup milk 200g beef, chopped 2 eggs 1 onion, chopped 50g green peas 100g grated cheese Salt and pepper to taste 1. Add all ingredients in a deep and large bowl and mix well. Cover with plastic wrap and vent. 2. Place food in the oven. Choose the menu and press start to cook. Stir at least twice during cooking.	Microwave-safe bowl

GLOBAL MENU INSTRUCTIONS - MIDDLE EASTERN MENU

Code	Menu	Weight Limit	Initial Temperature	Instructions	Utensil
Ec-1	Curry Chicken	1.5kg	Room	**Ingredients** 400g chicken breasts, cut into chunks ¼ cup olive oil 2 onions, chopped 4 garlic cloves, crushed 1 ginger root, peeled 1 cinnamon stick 2 dried red chilies 1 teaspoon tumericpowder 400g tomato sauce ½ cup water or stock ½ cup plain yogurt 1 tablespoon lemon juice Salt and pepper to taste 1. Add all ingredients in a deep and large bowl and mix well. Cover with plastic wrap and vent. 2. Place food in the oven. Choose the menu and press start to cook. Stir at least twice during cooking.	Microwave-safe bowl

GLOBAL MENU INSTRUCTIONS - MIDDLE EASTERN MENU

Code	Menu	Weight Limit	Initial Temperature	Instructions	Utensil
Ec-2	**Dolma**	1.0kg	Room	**Ingredients** 1 pot of grapes leaves 200g cooked rice 500g ground beef 1 onion, chopped Salt and pepper to taste ½ cup water ½ cup sour cream 1. Add cooked rice, ground beef, onion, salt and pepper in a bowl and mix well. 2. Place grape leaf on a flat surface and place 1 ½ spoonfuls of the rice mixture in the center of the leaf. Wrap rice mixture with leaf. 3. Put all wrapped leaves in rows into a deep and large bowl and add water. Cover with plastic wrap. 4. Place food in the oven. Choose the menu and press start to cook. 5. After cooking, serve with sour cream or as desired.	Microwave-safe bowl
Ec-3	**Rice Pilaf**	1.2kg	Room	**Ingredients** 300g beef, cut into chunks 1 onion, chopped 1 carrot, chopped 3 garlic cloves, crushed 1 teaspoon tumeric Salt and pepper to taste 200g long grain rice, rinsed and drained 2 cups water or stock 1. Cook beef, onion, carrot and garlic in a lightly oiled frying pan until lightly browned. Add tumeric, salt and pepper, mix well. 2. Place the cooked beef mixture into a deep and large bowl and add rice and water. Cover with plastic wrap and vent. 3. Place food in the oven. Choose the menu and press start to cook. Stir at least twice during cooking.	Microwave-safe bowl
Ec-4	**Shawarma**	0.8kg	Room	**Ingredients** 4~6 lavash or thin bread 200g chicken breasts, cooked and chopped 1 tomato, chopped 1 cucumber, chopped 3 tablespoons fresh greens, chopped Sauce : 1 tablespoon mayonnaise 1 tablespoon sour cream 1 tablespoon ketchup 1 garlic clove, crushed 1. Add chicken breasts, tomato, cucumber and greens in a deep and large bowl and mix well. 2. Mixall ingredients of the sauce in anotherbowl. 3. Place lavashon a flat surface and put sauce and chicken mixture. Wrap into rolls. 4. Place rolls on a dish and cover with plastic wrap. 5. Place food in the oven. Choose the menu and press start to cook.	Microwave-safe dish

MELT

The oven uses low power to melt foods (butter, chocolate, marshmallows and cheese). See the following table.

Example : To Melt 227g Chocolate.

1. Press **STOP/CLEAR.**

2. Press **MELT** two times.
   '2' appears in the display.

3. Press number **2.**
   '227' appears in the display.

4. Press **START/Q-START.**

   When the cook time is over, you will hear four beeps and **END** will be displayed.

SOFTEN

The oven uses low power to soften foods (butter, ice cream, cream cheese, and frozen juice)
See the following table.

Example : To Soften 227g Cream Cheese.

1. Press **STOP/CLEAR.**

2. Press **SOFTEN** three times.
   '3' appears in the display.

3. Press number **2.**
   '227' appears in the display.

4. Press **START/Q-START.**

When the cook time is over, you will hear four beeps and **END** will be displayed.

MELT TABLE

Category	Direction	Amount
Butter	Unwrap and place in microwavable container. No need to cover butter. Stir at the end of cooking to complete melting.	1, 2 or 3 sticks
Chocolate	Chocolate chips or squares of baking chocolate may be used. Unwrap squares and place in microwavable container. Stir at the end of cycle to complete melting.	113 or 227g
Cheese	Use processed cheese food only. Cut into cubes. Place in a single layer in microwavable container. Stir at the end of cooking to complete melting.	227 or 454g
Marshmallows	Large or miniature marshmallows may be used. Place in microwavable container. Stir at the end of cycle to complete melting.	142 or 284g

SOFTEN TABLE

Category	Direction	Amount
Butter	Unwrap and place in microwavable container. No need to cover butter. Butter will be at room temperature and ready for use in recipe.	1, 2 or 3 sticks
Ice Cream	Place container in oven. Ice cream will be soft enough to make scooping easier.	Pint, Quart, Half gallon
Cream Cheese	Unwrap and place in microwavable container. Cream cheese will be at room temperature and ready for use in recipe.	85 or 227g
Frozen Juice	Remove top. Place in oven. Frozen juice will be soft enough to easily mix with water.	170, 340 or 454g

AUTO DEFROST

Three defrost sequences are preset in the oven.
The auto defrost feature provides you with the best defrosting method for frozen foods. The cooking guide will show you which defrost sequence is recommended for the food you are defrosting.
For added convenience, the Auto Defrost includes a built-in beep mechanism that reminds you to check, turn over, separate, or rearrange to get the best defrost results. Three different defrosting levels are provided.

1 MEAT
2 POULTRY
3 FISH

Example: To defrost 1.2 KG of meat

1. Touch **STOP/CLEAR.**

2. Touch **Auto Defrost** one time. ‘dEF1’ appears in the display.

3. Enter the weight by touching **[1]** and **[2].**

4. Touch **START/Q-START** pad. Defrosting starts.

NOTE:
When you touch the **START/Q-START** pad, the display changes to defrost time count down. The oven will beep once during the DEFROST cycle. At beep, open the door and turn, separate, or rearrange the food.
Remove any portions that have thawed.
Return frozen portions to the oven and touch **START/Q-START** to resume the defrost cycle.

*For best results, remove fish, shellfish, meat, and poultry from its original wrapping paper or plastic package. Otherwise, the wrap will hold steam and juice close to the foods, which can cause the outer surface of the foods to cook.

*For best results, shape your ground meat into the form of a doughnut before freezing. When defrosting, separate any thawed meat when the beep sounds and continue defrosting.

*Place foods in a shallow container or on a microwave roasting rack to catch drippings.

*Food should still be somewhat icy in the center when removed from the oven.

AUTO DEFROST MENU INSTRUCTIONS

Category	Food to be Defrosted
MEAT (dEF1) 0.1-4.0kg	**Beef** Ground beef, Round steak, Cubes for stew, Tenderloin steak, Pot roast, Rib roast, Rump roast, Chuck roast, Hamburger patty **Lamb** Chops (25.4 mm thick), Rolled roast **Pork** Chops (12.7 mm thick), Hot dogs, Spareribs, Country-style ribs. Rolled roast, Sausage **Veal** Cutlets (0.5 kg, 12.7 mm thick)
POULTRY (dEF2) 0.1-4.0kg	**Poultry** Whole (under 4.0 kg), Cut-up, Breast (boneless) **Cornish Hens** Whole **Turkey** Breast
FISH (dEF3) 0.1-4.0kg	**Fish** Fillets, Whole Steaks **Shellfish** Crab meat, Lobster tails, Shrimp, Scallops

EXPRESS DEFROST

This feature should be used only when you defrost 0.5 kg of frozen ground beef.

Example: To defrost 0.5 kg Ground beef.

1. Touch **STOP/CLEAR.**
2. Touch **Express Defrost** .

BREAD DEFROST

The bread defrost feature provides you with the best defrosting method for frozen bread.
*Available weight is 0.1~0.5 kg.

Example: To defrost 0.1 kg of bread.

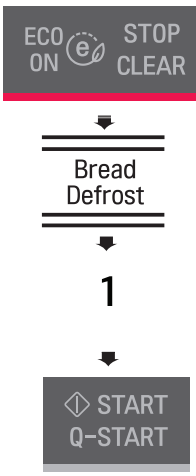

1. Touch **STOP/CLEAR.**
2. Touch **Bread Defrost** .
3. Enter the weight by touching **[1].**
4. Touch **START/Q-START** pad.

FOOD CHARACTERISTICS & MICROWAVE COOKING

Keeping an eye on things

The recipes in the book have been formulated with great care, but your success in preparing them depends on how much attention you pay to the food as it cooks. Always watch your food while it cooks. Your microwave function is equipped with a light that turns on automatically when the oven is in operation so that you can see inside and check the progress of your food. Directions given in recipes to elevate, stir, and the like should be thought of as the minimum steps recommended. If the food seems to be cooking unevenly, simply make the necessary adjustments you think appropriate to correct the problem.

Factors affecting microwave cooking times

Many factors affect cooking times. The temperature of ingredients used in a recipe makes a big difference in cooking times. For example, a cake made with ice-cold butter, milk, and eggs will take considerably longer to bake than one made with ingredients that are at room temperature. All of the recipes in this book give a range of cooking times. In general, you will find that the food remains under-cooked at the lower end of the time range, and you may sometimes want to cook your food beyond the maximum time given, according to personal preference. The governing philosophy of this book is that it is best for a recipe to be conservative in giving cooking times because overcooked food is ruined for good. Some of the recipes, particularly those for bread, cake, and custards, recommend that food be removed from the oven when they are slightly undercooked.
This is not a mistake. When allowed to stand, usually covered, these foods will continue to cook outside of the oven as the heat trapped within the outer portions of the food gradually travels inward. If the food is left in the oven until it is cooked all the way through, the outer portions will become overcooked or even burnt. You will become increasingly skillful in estimating both cooking and standing times for various foods.

Density of food

Light, porous food such as cakes and breads cook more quickly than heavy, dense foods such as roasts and casseroles. You must take care when microwaving porous food so that the outer edges do not become dry and brittle.

Height of food

The upper portion of tall foods, particularly roasts, will cook more quickly than the lower portion.

Therefore, it is wise to turn tall food several during cooking.

Moisture content of food

Since the heat generated from microwaves causes moisture to evaporate, relatively dry food such as roasts and some vegetables should either be sprinkled with water prior to cooking or covered to retain moisture.

Bone and fat content of food

Bones conduct heat and fat cooks more quickly than meat. Care must be taken when cooking bony or fatty cuts of meat in order to prevent unevenly or overcooked meat.

Quantity of food

The number of microwaves in your oven remains constant regardless of how much food is being cooked. Therefore, the more food you place in the oven, the longer the cooking time. Remember to decrease cooking times by at least one third when halving a recipe.

Shape of food

Microwaves penetrate only about 2 cm into food, the interior portion of thick foods are cooked as the heat generated on the outside travels inward. Only the outer edge of food is cooked by microwave energy; the rest is cooked by heat conduction. The worst possible shape for a food that is to be microwaved is a thick square.
The corners will burn long before the centre is even warm. Round thin foods and ring shaped foods cook most successfully in the microwave.

Covering

A cover traps heat and steam which causes food to cook more quickly. Use a lid or microwave cling film with a corner folded back to prevent splitting.

FOOD CHARACTERISTICS & MICROWAVE COOKING

Browning

Meats and poultry that are cooked fifteen minutes or longer will brown lightly in their own fat. Foods that are cooked for a shorter period of time may be brushed with a browning sauce such as worcestershire sauce, soy sauce or barbecue sauce to achieve an appetizing colour. Since relatively small amounts of browning sauces are added to food, the original flavour of the recipe is not altered.

Covering with greaseproof paper

It is a looser cover than a lid or cling film, the food may dry out slightly. But because it makes a looser cover than a lid or clingfilm, it allows the food to dry out slightly.

Arranging and spacing

Individual foods such as baked potatoes, small cakes and hors d'oeuvres will heat more evenly if placed in the oven an equal distance apart, preferably in a circular pattern. Never stack foods on top of one another.

Stirring

Stirring is one of the most important of all microwaving techniques. In conventional cooking, food is stirred for the purpose of blending. Microwaved food, however, is stirred in order to spread and redistribute heat. Always stir from the outside towards the centre as the outside of the food heats first.

Turning over

Large, tall foods such as roasts and whole chickens should be turned so that the top and bottom will cook evenly. It is also a good idea to turn cut up chicken and chops.

Placing thicker portions facing outwards

Since microwaves are attracted to the outside portion of food, it makes sense to place thicker portions of meat, poultry and fish to the outer edge of the baking dish. This way, thicker portions will receive the most microwave energy and the food will cook evenly.

Shielding with Aluminum Foil

Strips of aluminium foil (which block microwaves) can be placed over the corners or edges of square and rectangular foods to prevent those portions from overcooking. Never use too much foil and make sure the foil is well away from the walls or roof of the oven and that it is secured to the dish or it may cause'arcing' in the oven.

Elevating

Thick or dense foods can be elevated so that microwaves can be absorbed by the underside and centre of the foods.

Piercing

Foods enclosed in a shell, skin or membrane are likely to burst in the oven unless they are pierced prior to cooking. Such foods include yolks and whites of eggs, clams and oysters and whole vegetables and fruits.

Testing if cooked

Food cooks so quickly in a oven, it is necessary to test it frequently. Some foods are left in the microwave until completely cooked, but most foods, including meats and poultry, are removed from the oven while still slightly undercooked and allowed to finish cooking during standing time. The internal temperature of foods will rise between 5° F (3° C) and 15° F (8° C) during standing time.

Standing time

Foods are often allowed to stand for 3 to 10 minutes after being removed from the oven. Usually the foods are covered during standing time to retain heat unless they are supposed to be dry in texture (some cakes and biscuits, for example). Standing allows foods to finish cooking and also helps flavour blend and develop.

To Clean Your Oven

1 Keep the inside of the oven clean

Food spatters or spilled liquids stick to oven walls and between the seal and door surfaces. It is best to wipe up spillovers with a damp cloth right away. Crumbs and spillovers will absorb microwave energy and lengthen cooking times. Use a damp cloth to wipe out crumbs that fall between the door and the frame. It is important to keep this area clean to assure a tight seal. Remove greasy spatters with a soapy cloth then rinse and dry.
Do not use harsh detergent or abrasive cleaners. The metal tray can be washed by hand or in the dishwasher.

2 Keep the outside of the oven clean

Clean the outside of your oven with soap and water then with clean water and dry with a soft cloth or paper towel. To prevent damage to the operating parts inside the oven, the water should not be allowed to seep into the ventilation openings. To clean control panel, open the door to prevent the oven from accidentally starting, and wipe a damp cloth followed immediately by a dry cloth. Press Stop/Clear after cleaning.

3 If steam accumulates inside or around the outside of the oven door, wipe the panels with a soft cloth. This may occur when the oven is operated under high humidity conditions for a long period of time and in no way indicates a malfunction of the unit.

4 The door and door seals should be kept clean. Use only warm, soapy water, rinse then dry thoroughly.
DO NOT USE ABRASIVE MATERIALS, SUCH AS CLEANING POWDERS OR STEEL AND PLASTIC PADS.
Metal parts will be easier to maintain if wiped frequently with a damp cloth.

5 Do not use steam cleaners.

6 Unplug your oven from the electrical socket when you clean control panel with wet cloth or spray water on control glass to clean. If it is not unplugged, this product can be operated by touching the Quick Start button.

QUESTIONS & ANSWERS

FAQ	Answer
What's wrong when the oven light will not glow?	There may be several reasons why the oven light will not glow. Either the light bulb has blown or the electric circuit has failed.
Does microwave energy pass through the viewing screen in the door?	No. The holes, or ports, are made to allow light to pass; they do not let microwave energy through.
Why does the BEEP tone sound when a button on the control panel is touched?	The BEEP tone sounds to assure that the setting is being properly entered.
Will the microwave function be damaged if it operates empty?	Yes. Never run it empty.
Why do eggs sometimes pop?	When baking, frying, or poaching eggs, the yolk may pop due to steam build up inside the yolk membrane. To prevent this, simply pierce the yolk before cooking. Never microwave eggs in the shell.
Why is standing time recommended after microwave cooking is over?	After microwave cooking is finished, food keeps on cooking during standing time. This standing time finishes cooking evenly throughout the food. The amount of standing time depends on the density of the food.
Why doesn't my oven always cook as fast as the cooking guide says?	Check your cooking guide again to make sure you've followed directions correctly, and to see what might cause variations in cooking time. Cooking guide times and heat settings are suggestions, chosen to help prevent overcooking, the most common problem in getting used to this oven. Variations in the size, shape, weight and dimensions of the food require longer cooking time. Use your own judgment along with the cooking guide suggestions to test food conditions, just as you would do with a conventional cooker.

TECHNICAL SPECIFICATIONS

MS404＊＊＊		
Power Input		230 V ~ 240 V/50 Hz
Microwave Output Power.		1100 Watt (IEC60705 rating standard)
Microwave Frequency		2450 MHz
Oven Cavity Dimension	MS404＊＊＊	398 mm(W) X 265 mm(H) X 402 mm(D)
Outside Dimension		556 mm(W) X 320 mm(H) X 440 mm(D)
Net Weight		16.6 Kg
Shipping Weight		19.3 Kg
Power Consumption	Microwave	1600 watt

LG
Life's Good

LGEAP

FOR CUSTOMER SERVICE PLEASE CONTACT
LG SERVICE ON 1300 LG CARE (1300 54 2273) AUSTRALIA,
OR 0800 LG CARE (0800 54 2273) NEW ZEALAND.

LG Customer Information Centre

All Product related queries or questions
Please contact

Toll free number
AUSTRALIA **1300 54 2273**
NEW ZEALAND **0800 54 2273**

Customer Service Website:
http://au.lgservice.com

Please refer to the owner's manual for connection and operation related issues, prior to contacting customer information centre.

LG Electronics Australia
2 Wonderland Drive
Eastern Creek NSW 2766
(ABN: 98 064 531 264)

Printed in China