LG

MFL05775141250 6REV00

32LK660H*





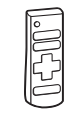





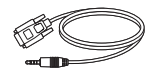

www.lg.com/id-manual PDF



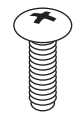

x 2
(M4 x L16)

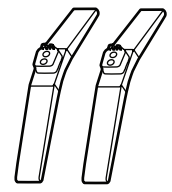

1

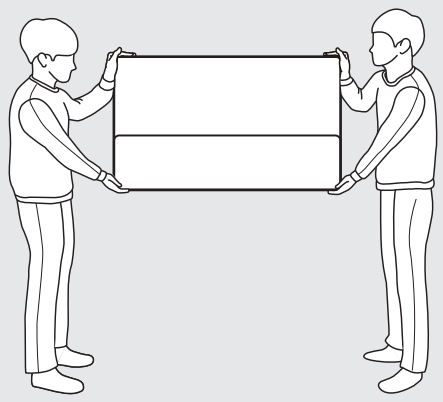

2

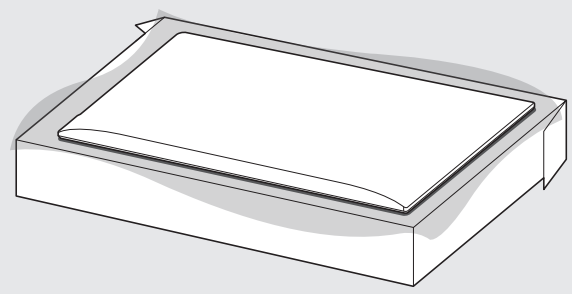

3

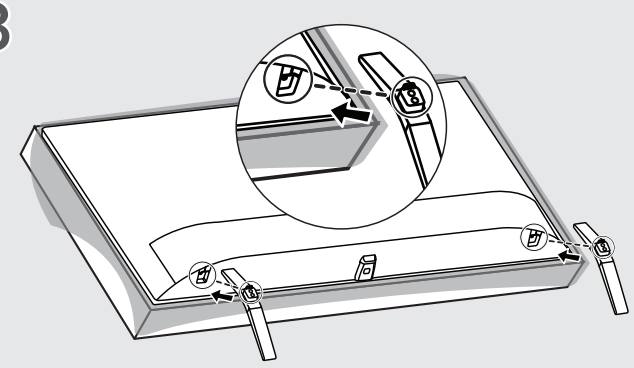

4

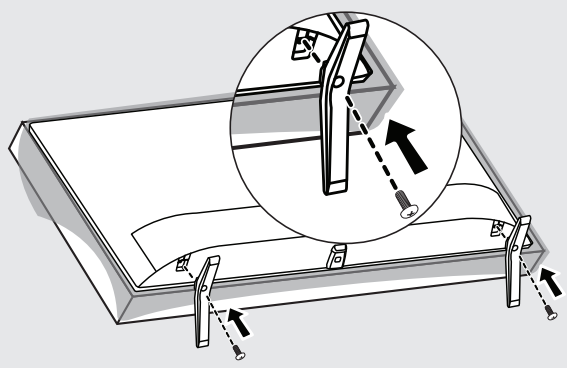

5

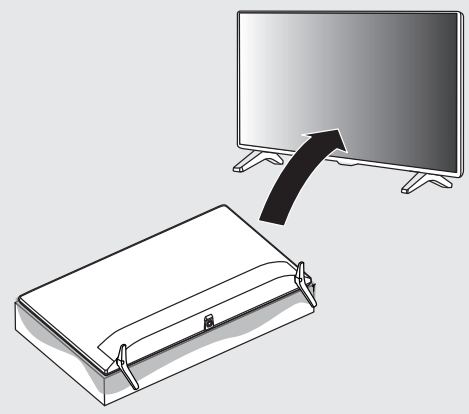

6

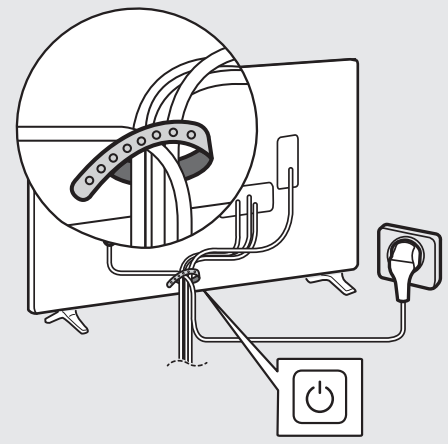

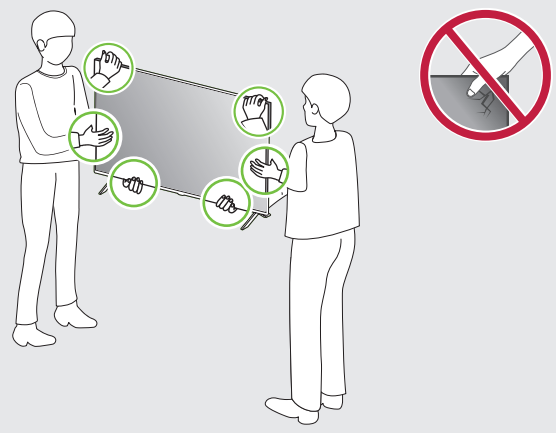

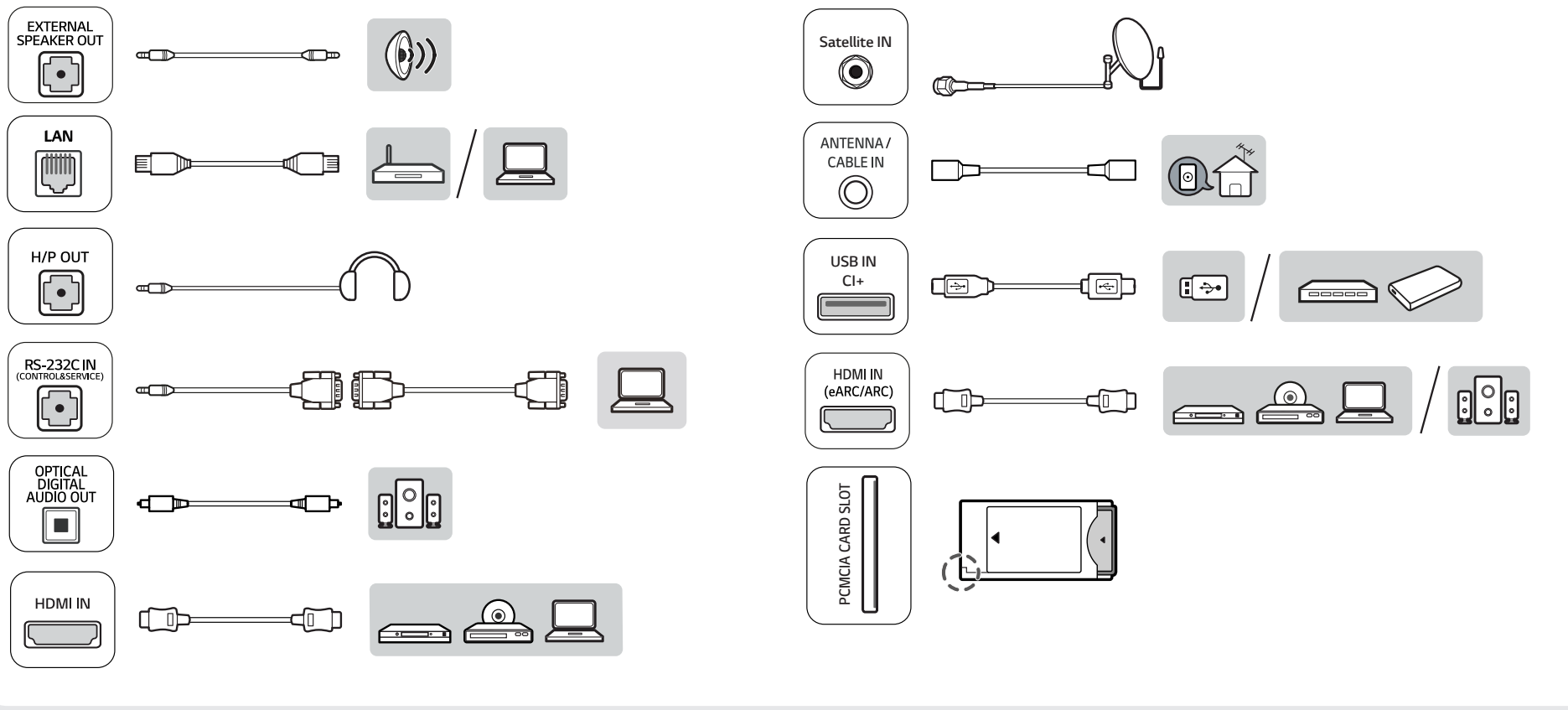

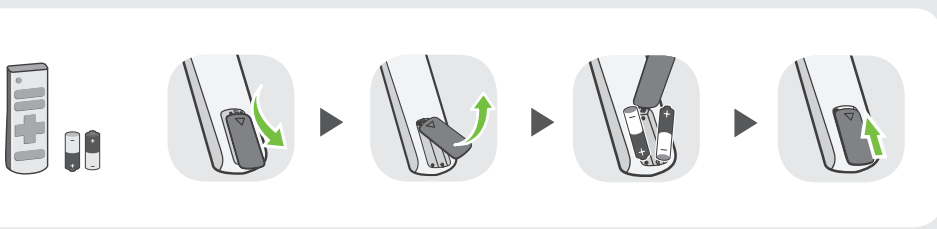

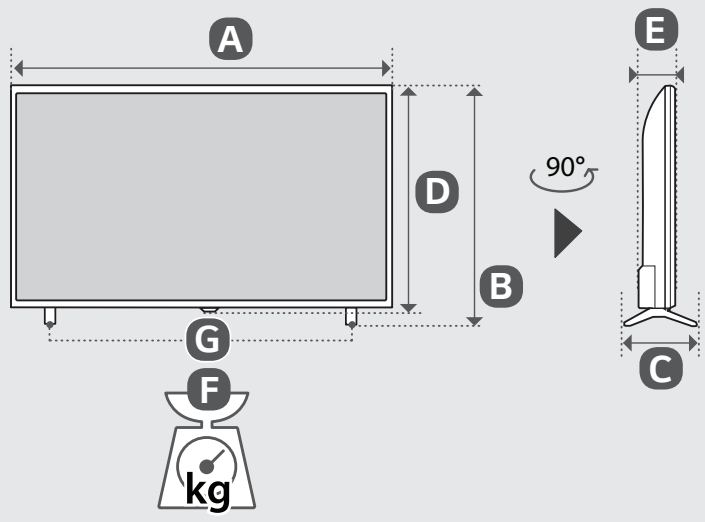

	A	B	C	D	E	F	F - G
	(mm)					(kg)	
32LK660H0LD	736	464	180	437	82.9	4.70	4.65
Power requirement				AC 100-240 V~ 50/60 Hz			