OWNER'S MANUAL

MEDICAL MONITOR

Please read this manual carefully before operating your set and retain it for future reference.

32HL714S

www.lg.com

Copyright © 2020 LG Electronics Inc. All Rights Reserved.

CONTENTS

ON CLEANING 3

LICENSE 4

OPEN SOURCE SOFTWARE NOTICE INFORMATION 4

ASSEMBLY AND PREPARING 5

USER SETTINGS 15

TROUBLESHOOTING 29

PRODUCT SPECIFICATIONS 31

EXTERNAL CONTROLLER SETUP.....39

Please note that this information is for proper use and safety of the equipment. The following symbols may indicate a hazardous situation in which, if not heeded, may result in serious injury or even death to the user or others, or damage to the equipment.

⚠ WARNING

- Indicates warning and safety instructions. If not adhered to, it could result in death or serious injury to the user or others.

⚠ CAUTION

- Indicates a hazardous situation which, if not heeded, may result in minor or moderate injury to the user or others, or damage to the equipment.

ON CLEANING

Recommended Cleaning Chemicals

- Isopropanol 70 %
- Ethanol 70 %
- 0.9 % NaCl solution
- Biospot 500 ppm

How to Use Cleaner

- Prior to cleaning, turn off the monitor and remove the power cable.
- Moisten a soft cloth in a recommended cleaner, then lightly rub the screen with no more than 1 N of force.
- The cleaner could cause serious damage if it leaks inside the monitor while cleaning.
- The display could be damaged, so only clean the parts of the monitor other than the screen's LCD panel.
- Do not use benzene, thinner, acids or alkaline cleaners or other such solvents.
- Cleaning guidelines for displays must only be carried out by medical professionals (Doctors or Nurses), cleaners must not be handled by patients.

LICENSE

Each model has different licenses. Visit *www.lg.com* for more information on the license.

The terms HDMI, HDMI High-Definition Multimedia Interface, HDMI trade dress and the HDMI Logos are trademarks or registered trademarks of HDMI Licensing Administrator, Inc.

"DICOM® is the registered trademark of the National Electrical Manufacturers Association for its Standards publications relating to digital communications of medical information."

OPEN SOURCE SOFTWARE NOTICE INFORMATION

To obtain the source code under GPL, LGPL, MPL, and other open source licenses, that is contained in this product, please visit *http://opensource.lge.com.* In addition to the source code, all referred license terms, warranty disclaimers and copyright notices are available for download. LG Electronics will also provide open source code to you on CD-ROM for a charge covering the cost of performing such distribution (such as the cost of media, shipping, and handling) upon email request to *opensource@lge.com.* This offer is valid for a period of three years after our last shipment of this product. This offer is valid to anyone in receipt of this information.

ASSEMBLY AND PREPARING

Product Composition

Please check whether all the components are included in the box before using the product. If there are any missing components, contact the retailer where you purchased the product.
Note that the product and related components may look different from those shown here.



CD (Owner's Manual / Software) / Regulatory Manual / Cards

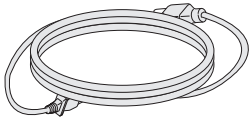

Power Cord

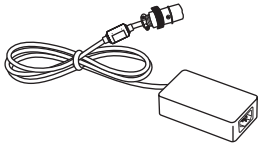

AC/DC Adaptor

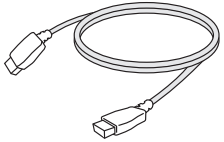

HDMI Cable

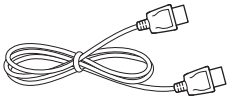

DisplayPort Cable

⚠ CAUTION

- Always use genuine LG components to ensure safety and product performance.
- The product warranty will not cover damage or injury caused by the use of unauthorized components.
- It is recommended to use the supplied components.
- If you use generic cables not certified by LG, the screen may not display or there may be image noises.
- Only use components listed below that meet the listed standard. Unauthorized components may cause damage to and malfunction of the product.

Component	Standard
HDMI Cable	UL, Impedance 100 ohm
DisplayPort Cable	UL, Impedance 100 ohm
Power Cord	US – Approved Medical grade regulation Others – Approved country safety regulation

- Except for the components listed above, only use AC/DC adaptors and components supplied by the manufacturer.

NOTE

- The components may look different from those illustrated here.
- Without prior notice, all product information and specifications contained in this manual are subject to change to improve the performance of the product.
- To purchase optional accessories, visit an electronics store or an online shopping site, or contact the retailer from which you purchased the product.
- The power cord provided may differ depending upon the region.

Supported Software

Check the drivers and software supported by your product and refer to the manuals on the CD enclosed in the product package.

Drivers and Software	Installation Priority
LG Calibration Studio	Recommended

- Required and Recommended: You can download and install the latest version from the enclosed CD or from the LGE website (*www.lg.com*).

Product and LED Control buttons

Front

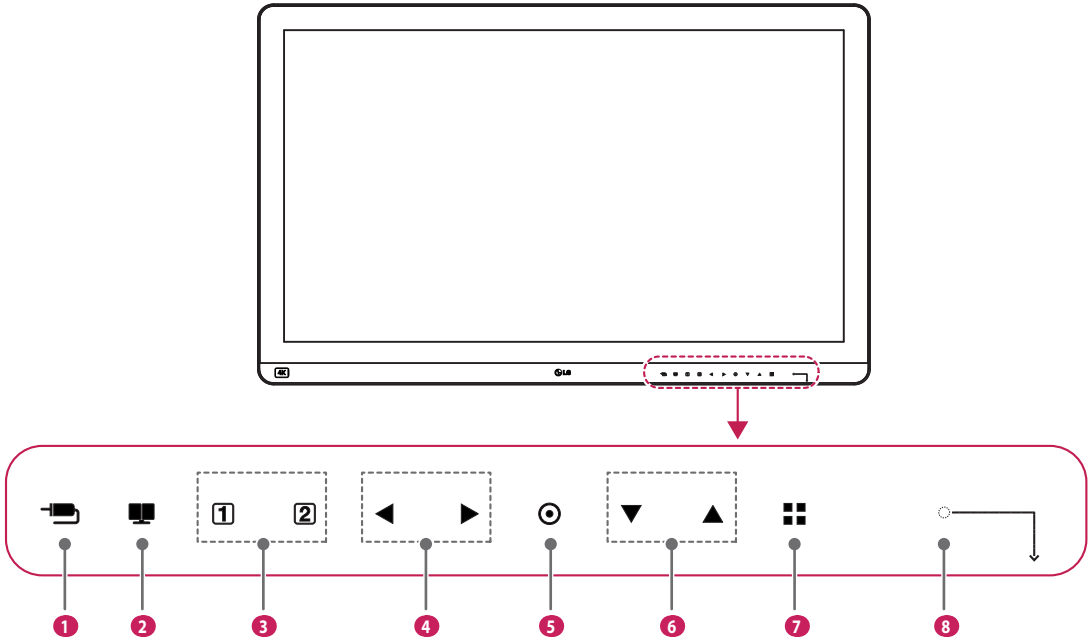

Bottom

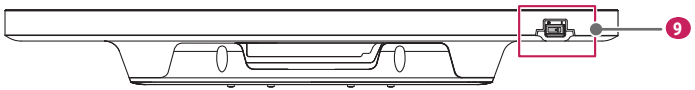

LED Control button Functions

1	**Input** • Selects the input mode.
2	**PIP/PBP** • Adjusts display mode for 2 or more screens.
3	**Hotkey 1 / 2** • Opens the [Hot key Settings] menu.
4	**Brightness ◀ / ▶** • Adjusts the screen brightness.
5	**OK** • Selects and confirms menus or options
6	**Contrast ▼ / ▲** • Adjusts the screen contrast.
7	**Menu** • Displays LED Control buttons on the front panel and opens the menu mode.
8	**Power indicator** • The green indicator illuminates if the power is on. The arrow indicates the position of the power switch.
9	**Power switch** • Turns the power on/off.

NOTE

- The Power button is located at the bottom right on the front of the monitor.
- If the Control Key LED is turned off, press the Control Key button to turn the Control button LED on. When the Control Key LED is turned on, you can control the Control Key functions.

Connectors

Back

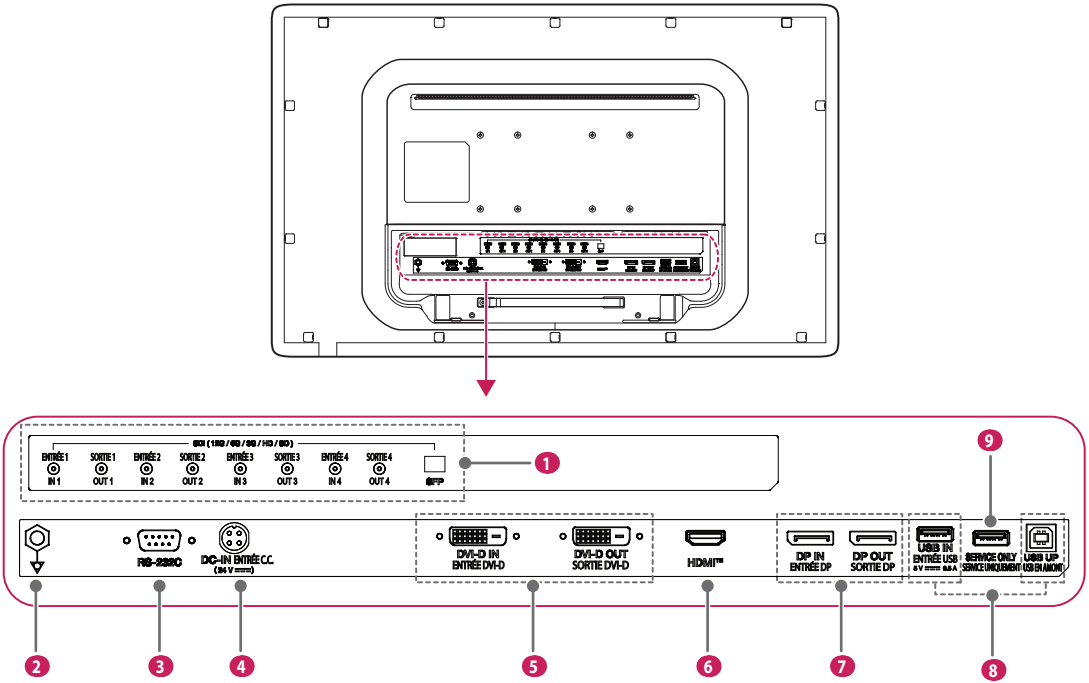

1 SDI IN/SDI OUT, SFP

- Receives or transmits digital video signals.
- Supported SDI(Serial Digital Interface signals) format is SMPTE 259M compliant (SD) / SMPTE 292M compliant (HD) / SMPTE 425M compliant (3G) / SMPTE ST 2081-10 (6G) / SMPTE ST 2082-10 (12G).
- 12G-SDI input transmission distance: 50 M (164 ft) max. (When using BELDEN1694A cable) / 70 M (229.6 ft) max. (When using CANARE UHD 5.5C cable)
- This model supports 12G-SDI video using SFP module.
- Recommended SFP module types.
  - Pluggable – SFP Type
  - Standard – Video format SDI
  - Host Pin configuration – Non-MSA
  - Optical Fiber Number of Input – 1
  - Optical Fiber Number of Output – 1
  - Connector – LC Type
  - Wavelength Receiver – 1270 nm ~ 1610 nm
  - Wavelength Transmitter – 1310 nm
  - Serial Data Rate(MAX) – 11.880 Mbps
  - Vendor – Embrionix

2 Potential Equalization Conductor

- Connect an equipotential plug.

3 RS-232C

- Connect the RS-232C terminal with an external device to control the monitor.

4 DC-IN

- Connect an AC/DC adapter.

5 DVI-D IN/DVI-D OUT

- Receives or transmits digital video signals.
- Connect a up to 5-meter (16.4 ft) cable to transmit a duplicated screen to a monitor.

6 HDMI IN

- Input digital video signal.
- Using a DVI to HDMI / DisplayPort to HDMI cable may cause compatibility issues.
- Use a certified cable that displays the HDMI logo. The screen may not appear or a connection error could occur if a non-certified cable is used.
- Recommended HDMI cable types
  - High speed HDMI®/™ cable
  - High speed HDMI®/™ Ethernet cable

7 DP IN/DP OUT

- Receives or transmits digital video signals.
- There may be no video output depending on the DisplayPort version of your PC.
- A cable with DisplayPort 1.2 specifications is recommended when using a Mini DisplayPort to DisplayPort cable.

8	**USB IN/USB UP** • Used for HW Calibrator (Optional Accessory) connection. • Connect peripheral device to the USB input port. • A keyboard, mouse, or USB storage device can be connected. • To use USB 2.0, connect the A-B type USB 2.0 cable to the PC. **⚠ CAUTION** Cautions When Using a USB Storage Device • A USB storage device which has a built-in automatic recognition program or uses its own driver might not be recognizable. • Some USB storage devices may not be supported or may not work properly. • It is recommended to use a USB hub or hard disk drive with power supplied. (If the power supplied is not enough, the USB device may not be detected properly.)
9	**SERVICE ONLY** - This USB port is used only for service.

NOTE

- All signal out terminals (SDI, DVI, etc.) output a signal when the power switch of the monitor is on. When the power switch is off, no signal is outputted.
- This monitor supports the *Plug and Play feature.

* Plug and Play: A feature that allows you to add a device to your computer without the need for physical device configuration or user intervention.

Installing the Monitor

Cable connection and organize

Before connecting the connectors, remove the back door as shown below.

1 Once the screws are removed, lift the back door in the direction of the arrow below to remove it. The back door is held in place with a magnet.

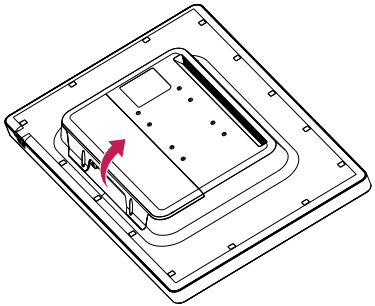

2 After installing the cables, tidy them up using the cable holders.

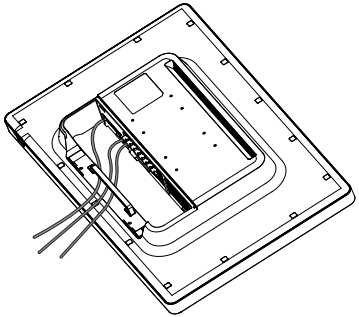

3 Once the back door is attached, assemble it using the screws.

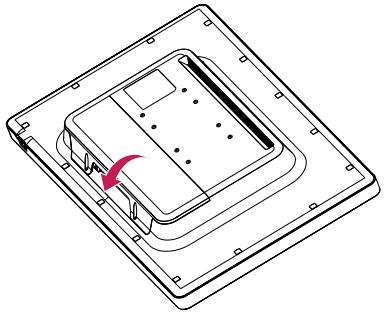

⚠ CAUTION

- When the back door is attached to the monitor, the monitor meets water resistance standards. Do not use the monitor with the back door detached, as the water resistance capability is not guaranteed without the door.
- Only fix the back door with screws when the potential equalization conductor is not connected. When the potential equalization conductor is connected, don't fix the back door with screws (you can cover the back door with a magnet only).

Installing on the Wall

Install the monitor at least 100 mm (3.9 inches) away from the wall on each side of the monitor to ensure sufficient ventilation. Detailed installation instructions can be obtained from your local dealer. Please refer to the manual to install and set up a tilting wall mounting bracket.

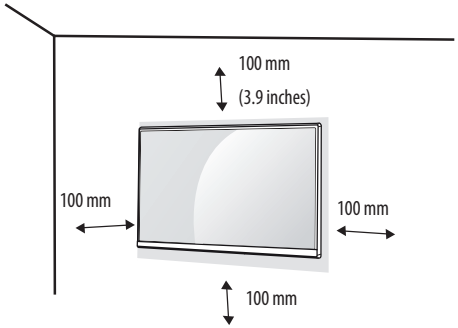

To install the monitor to a wall, attach a wall mount plate (optional) to the back of the monitor.

Make sure that the wall mount plate (optional) is securely fixed to the monitor and to the wall.

Installing the Wall Mount Plate

This monitor meets the specifications for the wall mount plate or other compatible devices.

Wall Mount	**mm**	100 x 100
	inches	3.9 x 3.9
Standard screw		M4 x L10
Required screws		4
Wall mount plate (optional)		LSW140 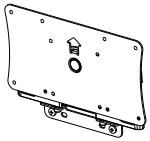

NOTE

- A non-VESA standard screw may damage the product and cause the monitor to fall. LG Electronics is not liable for any accidents relating to the use of non-standard screws.
- The wall mount kit includes the installation guide and all necessary parts.
- The wall mounting bracket is optional. You can obtain optional accessories from your local dealer.
- The length of the screw may differ for each wall mounting bracket. If you use screws longer than the standard length, it may damage the inside of the product.
- For more information, please refer to the user manual for the wall mounting bracket.
- Be careful not to apply too much force while mounting the wall mount plate as it may cause damage to the screen.
- Remove the stand before installing the monitor on a wall mount by performing the stand attachment in reverse.

⚠ CAUTION

- Disconnect the power cord before moving or installing the monitor. There is risk of electric shock.
- Installing the monitor on the ceiling or on a slanted wall may result in the monitor falling off, which could lead to injury. Use an authorized LG wall mount and contact the local dealer or qualified personnel.
- To prevent injury, this apparatus must be securely attached to the wall in accordance with the installation instructions.
- Applying excessive force when tightening screws may damage the monitor. Such damage is not covered by the product warranty.
- Use the wall mounting bracket and screws that confirm to VESA standards. Damage caused by the use or misuse of inappropriate components is not covered by the product warranty.
- When measured from the back of the monitor, the length of each installed screw must be 8 mm (0.3 inches) or less.

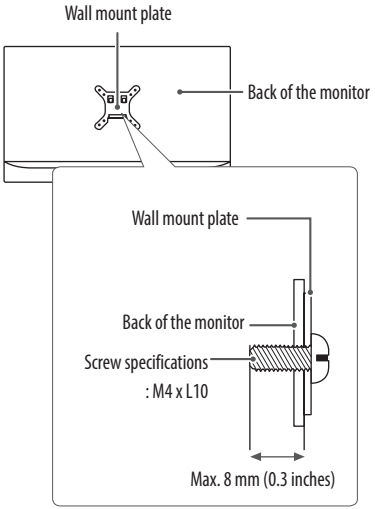

Precautions for Connecting the Power Cord

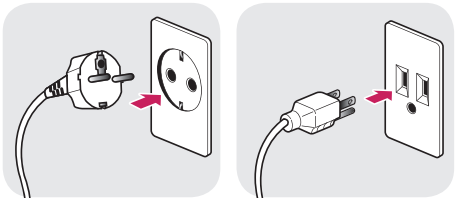

100-240 V ~

- Make sure to use the power cord that is provided in the product package. Connect the cord to a grounded power outlet.
- If you need another power cord, please contact your local dealer or the nearest retail store.

USER SETTINGS

Activating the Quick Menu

1 Press (▪▪) to activate the LED Control Button. When the LED Control button is activated, press (▪▪) to show the OSD Quick Menu.
2 Among the LED Control Button, press (◀, ▶) to move to the left or right or (▼, ▲) to move to the bottom or top or (◎) to set options.
3 In order to exit from the OSD Menu, press the LED Control Button (▪▪) or select [Exit].

The applicable setting options are as shown below.

Quick Menu Settings	Explanation
[Exit]	Closes the Quick Menu.
[Input]	Selects the applicable input mode.
[Picture Mode]	Selects the [Picture Mode]. **NOTE** • If the [Picture Mode] is not the [Custom] mode, [Gamma] and [Color Temp] will be deactivated.
[Gamma]	Selects the screen's [Gamma].
[Color Temp]	Selects the screen's [Color Temp].
[All Settings]	Enters the All Settings menu.

CAUTION

• The Monitor OSD (On Screen Display) may differ from the description in the User Manual.

[Quick Settings]

1 Press (⋮⋮) to activate the LED Control Button. When the LED Control Button is activated, press (⋮⋮) and select [All Settings] to show the complete OSD Menu.
2 Among the LED Control Button, press (◀, ▶) to move to the left or right or (▼, ▲) to move to the bottom or top to go to the [Quick Settings].
3 Configure the options following the instructions that appear in the bottom right corner.
4 To configure an upper menu or another item, press the LED Control Button (◀) or press (◎) to move to the settings.
5 In order to exit from the OSD Menu, press the LED Control Button (⋮⋮) or press (◀).

The applicable setting options are as shown below.

[All Settings] > [Quick Settings]	Explanation	
[Brightness]	Adjusts screen brightness. **NOTE** • Press the ▼ button to toggle between [Turn on 'Brightness Stabilization']/[Turn off 'Brightness Stabilization']. • When [Brightness Stabilization] is [On], the [Brightness] adjustment function is deactivated. • When [Brightness Stabilization] is [On], [SMART ENERGY SAVING] and [DFC] functions are deactivated. • When [Picture Mode] is set as [DICOM], or [Gamma] is set as [DICOM Gamma Curve] Setting, the [Brightness] adjustment function is deactivated.	
[Contrast]	Adjusts the color contrast of the screen.	
[Color Temp]	Set your own color temperature. ([Custom], [6500K], [7500K], [9300K], [Manual])	
[Hot key Settings]	Designate a hotkey for screen image settings. After setting the hotkey, use the hotkey in the LED Control Button to enable the set menu. ([PIP Size], [Gamma], [Mono], [Color Temp], [Black Stabilizer], [Screen Zoom], [Off])	
	[Hotkey 1]	Select a function to use with [Hotkey 1].
	[Hotkey 2]	Select a function to use with [Hotkey 2].

<table>
<tr><th>[All Settings] > [Quick Settings]</th><th colspan="2">Explanation</th></tr>
<tr><td>[User Preset]</td><td colspan="2">User Preset allows the user to save or load up to 10 picture quality settings for multiple connected devices in each preset.
NOTE
• You can use User Preset to import or save items in [Picture Adjust] and [Color Adjust] of the [Picture] menu.</td></tr>
<tr><td></td><td>[User Name]</td><td>Allows the user to change and register a user name (Preset 1 ~ Preset 3, User 1 ~ User 7) as the user wants.
The user can enter a user name to be registered by using the screen keyboard.
Preset 1 ~ Preset 3 are factory-set user names as samples and the user can change the names.</td></tr>
<tr><td></td><td>[Load User Settings]</td><td>Allows the user to change the picture quality settings by loading the User Preset settings.</td></tr>
<tr><td></td><td>[Save User Settings]</td><td>Saves the current picture quality settings in the corresponding User Preset.
Preset 1 ~ Preset 3 are factory-set values as samples and the user can change the values.
• Preset 1: Use this preset for bluish color.
• Preset 2: Use this preset for greenish color and brighter low-gradation.
• Preset 3: Use this preset to soften the red tone.
• User 1 ~ User 7: Initial values are the same as the factory settings.</td></tr>
<tr><td></td><td>[Default User Settings]</td><td>Loads the initial basic picture settings.</td></tr>
<tr><td></td><td>[User Preset Reset]</td><td>Initializes User Preset settings.
• Initializes the existing user name and user settings to be restored to factory settings (Preset 1 ~ Preset 3, User 1 ~ User 7).</td></tr>
</table>

[Input]

1 Press (⊞) to activate the LED Control Button. When the LED Control Button is activated, press (⊞) and select [All Settings] to show the complete OSD Menu.
2 Among the LED Control Button, press (◀, ▶) to move to the left or right or (▼, ▲) to move to the bottom or top to go to the [Input].
3 Configure the options following the instructions that appear in the bottom right corner.
4 To configure an upper menu or another item, press the LED Control Button (◀) or press (◎) to move to the settings.
5 In order to exit from the OSD Menu, press the LED Control Button (⊞) or press (◀).

The applicable setting options are as shown below.

[All Settings] > [Input]	Explanation					
[Input List]	Selects the input mode.					
	PBP / PIP Connection		Sub			
			SDI	DVI	HDMI	DisplayPort
	Main	SDI	-	0	0	0
		DVI	0	-	0	0
		HDMI	0	0	-	0
		DisplayPort	0	0	0	-

[All Settings] > [Input]	Explanation
[SDI Mode]	Selects among the SDI signal processing modes. ([Single1], [Single2], [Single3], [Single4], [12G 2-SI(QUAD Link)], [12G Square(QUAD Link)], [SFP]) **NOTE** • Single 12G-SDI Signal Format: [Single1], [Single2], [Single3], [Single4], [SFP] • Quad 3G-SDI Signal Format: [12G 2-SI(QUAD Link)], [12G Square(QUAD Link)] - Square Division: The full image is divided into four quadrants using four 3G-SDI signal format. - 2 SI(Sample Interleave): The full image is divided into sampling data that consisting of two pixels are transferred using four 3G-SDI signal format. - Please connect the four cables in the order of the signals. Incorrect connection does not display the screen properly. • When using QUAD Link, it should be connected as below. 1 2 3 4

[All Settings] > [Input]	Explanation	
[Aspect Ratio]	Adjusts the aspect ratio of the screen. ([Full Wide], [Original], [Just Scan]) **NOTE** • The display may look the same for [Full Wide], [Original] and [Just Scan] options at the 3840 x 2160 resolution.	
[Screen Flip]	Adjusts the screen image rotation. ([Rotation], [Mirror], [Off]) **NOTE** • The function is deactivated at the 3PBP / 4PBP Mode.	
[PBP / PIP]	Adjusts display mode for 2 or more screens.	
[PIP Size]	Adjusts the size of PIP. ([Small], [Medium], [Large]) **NOTE** • The screen is zoomed on [Small] Mode.	
[Main/Sub Screen Change]	Converts between the Main and the Sub in the [PBP / PIP] mode.	
[Failover Input Switch]	[Main input] is changed to [Failover Input] when there is no signal at the [Main Input].	
	[Failover Input Switch]	The [Failover Input Switch] input will be operated or turned off.
	[Main Input]	Select [Main Input] source.
	[Failover Input]	Select [Failover Input] source.
	[SDI Failover]	The [SDI Failover] will be operated or turned off. • The [SDI Failover] function allows automatic switch to the SDI Failover input by searching for available signal in order from single 1 to single 4.

NOTE

• If not using the [PBP / PIP] feature, [PIP Size], [Main/Sub Screen Change] are deactivated.

[Picture]

1 Press (▪▪) to activate the LED Control Button. When the LED Control Button is activated, press (▪▪) and select [All Settings] to show the complete OSD Menu.
2 Among the LED Control Button, press (◀, ▶) to move to the left or right or (▼, ▲) to move to the bottom or top to go to the [Picture].
3 Configure the options following the instructions that appear in the bottom right corner.
4 To configure an upper menu or another item, press the LED Control Button (◀) or press (◎) to move to the settings.
5 In order to exit from the OSD Menu, press the LED Control Button (▪▪) or press (◀).

The applicable setting options are as shown below.

NOTE

- The [Picture Mode] that can be set depends on the Input signal.

[Picture Mode] on SDR (Non HDR) signal

[All Settings] > [Picture]	Explanation	
[Picture Mode]	[Custom]	Allows the user to adjust each element. The color mode of the main menu can be adjusted.
	[Vivid]	Heightens contrast, brightness and sharpness to display vivid images.
	[HDR Effect]	Optimizes the screen for high dynamic range.
	[Mono]	Mono (black and white) color mode.
	[REC709]	Optimizes the screen for REC709.
	[REC2020]	Optimizes the screen for REC2020.
	[DICOM]	A mode that optimizes the screen settings so you can view images for medical use.
	[Calibration 1]	Configures to the last calibrated (corrected) screen.
	[Calibration 2]	Configures to a previously calibrated (corrected) screen.
	NOTE • [Calibration 2]: If you use Calibration after installing the **LG Calibration Studio** program, the applicable menu will be activated.	

[Picture Mode] on HDR signal (HDMI Only)

[All Settings] > [Picture]	Explanation	
[Picture Mode]	[Custom]	Allows the user to adjust each element.
	[Vivid]	Optimized the screen for HDR vivid colors.
	[Standard]	Optimized the screen for HDR standard.
	NOTE • HDR content may not display correctly depending on Windows 10 OS settings, please check HDR On/Off settings in Windows. • When the HDR function is turned on, the characters or picture quality may be poor according to Graphic card performance. • While the HDR function is on, screen flickering or cracking may occur when changing the monitor input or power on/off according to Graphic card performance.	

[All Settings] > [Picture]	Explanation		
[Picture Adjust]	[Brightness]	Adjusts screen brightness. **NOTE** • Press the ▼ button to toggle between [Turn on 'Brightness Stabilization']/[Turn off 'Brightness Stabilization']. • When [Brightness Stabilization] is [On], the [Brightness] adjustment function is deactivated. • When [Brightness Stabilization] is [On], [SMART ENERGY SAVING] and [DFC] functions are deactivated. • When [Picture Mode] is set as [DICOM], or [Gamma] is set as [DICOM Gamma Curve] Setting, the [Brightness] adjustment function is deactivated.	
	[Contrast]	Adjusts the color contrast of the screen.	
	[Sharpness]	Adjusts the sharpness of the screen.	
	[Brightness Stabilization]	Maintains the brightness configured of the screen.	
		[On]	Automatically adjusts brightness.
		[Off]	Deactivates the applicable function and the user can adjust the brightness.
	[SUPER RESOLUTION+]	[High]	Select this option for crystal clear images.
		[Middle]	The optimized picture quality is displayed when a user wants images between low and high modes for comfortable viewing.
		[Low]	The optimized picture quality is displayed when a user wants smooth and natural images.
		[Off]	Select this option for the normal user experience. Deactivates the [SUPER RESOLUTION+] function.
	[Black Level]	Sets up the offset level. (HDMI only) • Offset: as a reference for a video signal, this is the darkest color the monitor can display.	
		[High]	Maintains the current screen contrast range.
		[Low]	Reduces the black levels and increases the white levels of the current screen contrast range.

[All Settings] > [Picture]	Explanation		
[Picture Adjust]	[DFC]	[On]	Automatically adjusts brightness depending on the screen.
		[Off]	Deactivates the [DFC] function.
	[Response Time]	Sets a response time for displayed pictures based on the movement of the picture on the screen. In a normal environment, it is recommended that you set [Fast]. For images with a lot of motion, it is recommended that you set [Faster]. But, when [Faster] is set, it may cause an afterimage.	
		[Faster]	Sets the response time to Faster.
		[Fast]	Sets the response time to Fast.
		[Normal]	Sets the response time to Normal.
		[Off]	Does not use the response time improvement feature.
	[Black Stabilizer]	Adjusts the black level to clearly see objects on a dark screen. Increasing the [Black Stabilizer] value brightens the low grey levels on the screen. (You can easily distinguish objects on a dark game screen.) Reducing the [Black Stabilizer] value darkens the low grey levels and increases the dynamic contrast on the screen.	
	[Uniformity]	Automatically adjusts the brightness uniformity of the screen. **NOTE** • If [Uniformity] is activated, the screen may become darker.	
		[On]	Activates the [Uniformity] function.
		[Off]	Deactivates the [Uniformity] function.

[All Settings] > [Picture]	Explanation		
[Color Adjust]	[Gamma]	Set your own gamma value. ([Gamma 1.8], [Gamma 2.0], [Gamma 2.2], [Gamma 2.4], [Gamma 2.6], [DICOM Gamma Curve]) Higher gamma settings mean a darker image is displayed or vice versa.	
	[Color Temp]	Set your own color temperature. ([Custom], [6500K], [7500K], [9300K], [Manual])	
		[Custom]	Users can customize the red, green and blue colors.
		[6500K]	Indicates the screen color with a 6500K red color temperature.
		[7500K]	Sets the screen color between red and blue with a 7500K color temperature.
		[9300K]	Indicates the screen color with 9300K blue color temperature.
		[Manual]	Adjusts the color temperature in 500K increments. (However, supports 9300K instead of 9500K)
	[Red]	You can customize the picture color using red, green and blue colors.	
	[Green]		
	[Blue]		
	[Six Color]	Meets the user requirements for colors by adjusting the hue and saturation of the six colors (red, green, blue, cyan, magenta and yellow) and then saving the settings.	
		Hue	Adjusts the tint of the screen colors.
		Saturation	The lower the screen's color sharpness value, the less sharper and brighter the colors become. The higher the value, the sharper and darker the colors become.
[Picture Reset]	Returns color to the default settings.		

[General]

1 Press (⋮⋮) to activate the LED Control Button. When the LED Control Button is activated, press (⋮⋮) and select [All Settings] to show the complete OSD Menu.
2 Among the LED Control Button, press (◀, ▶) to move to the left or right or (▼, ▲) to move to the bottom or top to go to the [General].
3 Configure the options following the instructions that appear in the bottom right corner.
4 To configure an upper menu or another item, press the LED Control Button (◀) or press (◎) to move to the settings.
5 In order to exit from the OSD Menu, press the LED Control Button (⋮⋮) or press (◀).

The applicable setting options are as shown below.

[All Settings] > [General]	Explanation	
[Language]	Sets the menu screen to the desired language.	
[SMART ENERGY SAVING]	Conserve energy by using luminance compensation algorithm.	
	[High]	Saves energy using the high-efficiency [SMART ENERGY SAVING] feature.
	[Low]	Saves energy using the low-efficiency [SMART ENERGY SAVING] feature.
	[Off]	Disables the [SMART ENERGY SAVING] function.
[LED Control Button]	Adjusts the ON time of the Control Button. ([Always On], [20Sec Time Out], [10Sec Time Out], [5Sec Time Out])	
[DVI Power Supply]	Supplies power to a device used by connecting to a DVI input terminal in the form of dongle without power. (Max. 0.5 A)	
	[On]	Activates the [DVI Power Supply] function.
	[Off]	Deactivates the [DVI Power Supply] function.
[Hot key Settings]	Designate a hotkey for screen image settings. After setting the hotkey, use the hotkey in the LED Control Button to enable the set menu. ([PIP Size], [Mono], [Color Temp], [Gamma], [Black Stabilizer], [Screen Zoom], [Off])	
	[Hotkey 1]	Select a function to use with [Hotkey 1].
	[Hotkey 2]	Select a function to use with [Hotkey 2].

[All Settings] > [General]	Explanation	
[User Preset]	User Preset allows the user to save or load up to 10 picture quality settings for multiple connected devices in each preset. **NOTE** • You can use User Preset to import or save items in [Picture Adjust] and [Color Adjust] of the [Picture] menu.	
	[User Name]	Allows the user to change and register a user name (Preset 1 ~ Preset 3, User 1 ~ User 7) as the user wants. The user can enter a user name to be registered by using the screen keyboard. Preset 1 ~ Preset 3 are factory-set user names as samples and the user can change the names.
	[Load User Settings]	Allows the user to change the picture quality settings by loading the User Preset settings.
	[Save User Settings]	Saves the current picture quality settings in the corresponding User Preset. Preset 1 ~ Preset 3 are factory-set values as samples and the user can change the values. • Preset 1: Use this preset for bluish color. • Preset 2: Use this preset for greenish color and brighter low-gradation. • Preset 3: Use this preset to soften the red tone. • User 1 ~ User 7: Initial values are the same as the factory settings.
	[Default User Settings]	Loads the initial basic picture settings.
	[User Preset Reset]	Initializes User Preset settings. • Initializes the existing user name and user settings to be restored to factory settings (Preset 1 ~ Preset 3, User 1 ~ User 7).
[Auto Screen Off]	Automatically turns off the screen when there is no monitor signal for a set time period.	
	[On]	Activates [Auto Screen Off] function.
	[Off]	Deactivates [Auto Screen Off] function.
[HW Calibration]	[RS-232C] and the [HW Calibration] cannot be used at the same time.	
	[On]	The HW Calibration function will operate.
	[Off]	The HW Calibration function will be turned off.
[RS-232C]	[RS-232C] and the [HW Calibration] cannot be used at the same time.	
	[RS-232C]	The [RS-232C] function will be operated or turned off.
	[Set ID]	Adjusts [Set ID]. (The scope of adjustment: 1-10)

<table>
<tr><th>[All Settings] > [General]</th><th colspan="2">Explanation</th></tr>
<tr><td>[DisplayPort 1.2]</td><td colspan="2">Enables or disables [DisplayPort 1.2].
NOTE
• Be sure to configure this option according to the DisplayPort version supported by your graphics card. If the graphics card is not compatible set to [Disable].
• The graphics card's 10 bit display cannot be used when [DisplayPort 1.2] is disabled.</td></tr>
<tr><td>[HDMI ULTRA HD Deep Color]</td><td colspan="2">Provides sharper images when connected to a device supporting ULTRA HD Deep Color.
NOTE
• If the connected device does not support Deep Color, the screen or sound may not work properly. In this case, set this function to off.
• To use [HDMI ULTRA HD Deep Color], turn this function on.</td></tr>
<tr><td rowspan="4">[OSD Lock]</td><td colspan="2">A function for restricting menu configuration and adjustment.</td></tr>
<tr><td>[On]</td><td>Turns on [OSD Lock].</td></tr>
<tr><td>[Off]</td><td>Turns off [OSD Lock].</td></tr>
<tr><td colspan="2">NOTE
• Deactivates all functions except the [Quick Settings] menu and [Input] menu's [Input List], [SDI Mode], [Aspect Ratio], [PBP / PIP], [Screen Flip] functions, [Failover Input Switch], and the [General] menu's [OSD Lock] and [Information] functions.</td></tr>
<tr><td>[Information]</td><td colspan="2">The following display information will be shown; [Total Power On Time], [Resolution].</td></tr>
<tr><td rowspan="3">[Reset to Initial Settings]</td><td colspan="2">[Do you want to reset your settings?]</td></tr>
<tr><td>[Yes]</td><td>Restores the screen settings to the default settings when your monitor was first purchased.</td></tr>
<tr><td>[No]</td><td>Cancels the selection.</td></tr>
</table>

TROUBLESHOOTING

Nothing is displayed on the screen.

Problem	Action
Is the monitor's power cord plugged in?	• Check if the power cord is correctly plugged into the power outlet.
Is the power indicator on?	• Check the power cable connection and turn on the power switch.
Is the power indicator displaying as green?	• Check if the input setting is correct. (> [All Settings] > [Input])
Is the [Out of Range] message being displayed?	• This occurs when signals transferred from the PC (graphics card) are out of the horizontal or vertical frequency range of the monitor. Please see the <PRODUCT SPECIFICATIONS> section of this manual to set the appropriate frequency.
Is the [No Signal] message displayed?	• This is displayed when the signal cable between the PC and the monitor is missing or disconnected. Check the cable and reconnect it.

The screen retains an image.

Problem	Action
Does image sticking occur even when the monitor is turned off?	• Displaying a still image for a prolonged time may cause damage to the screen, resulting in the retention of the image. • To extend the lifetime of the monitor, use a screensaver.

The screen is unstable and shakes. / There are shadowy traces left on the screen.

Problem	Action
Did you select the appropriate resolution?	• If the selected resolution is HDMI 1080i 60/50 Hz (interlaced), the screen may be flickering. Change the resolution to 1080p or the recommended resolution.

The display color is abnormal.

Problem	Action
Does the display appear discolored (16 colors)?	• Set the number of colors to 24 bit (true colors) or higher: In Windows Control Panel > Display > Settings > Color Quality (May differ depending on your operating system.)
Does the display color appear unstable or monochrome?	• Check if the signal cable is connected properly. Reconnect the cable or reinsert the PC's graphics card.
Are there spots on the screen?	• When using the monitor, pixilated spots (red, green, blue, white or black) may appear on the screen. This is normal for an LCD screen. It is not an error, nor is it related to the monitor's performance.

PRODUCT SPECIFICATIONS

In order to improve the product, specifications may change without notice.

The ~ symbol means alternating current, and the symbol ⎓ means direct current.

LCD Screen	Type	TFT (Thin Film Transistor) LCD (Liquid Crystal Display) Screen
	Pixel Pitch	0.18159 mm x 0.18159 mm
Resolution	Max Resolution	DVI-D: 1920 x 1080 @ 60 Hz HDMI / DisplayPort: 3840 x 2160 @ 60 Hz SDI: 4096 x 2160 @ 60 Hz
	Recommended Resolution	DVI-D: 1920 x 1080 @ 60 Hz SDI / HDMI / DisplayPort: 3840 x 2160 @ 60 Hz
Video Signal	Horizontal Frequency	DVI-D: 30 kHz to 83 kHz HDMI / DisplayPort: 30 kHz to 135 kHz
	Vertical Frequency	56 Hz to 61 Hz
Input Connector	Potential Equalization Conductor, DC-IN (24 V ⎓), RS-232C, SDI IN 1/2/3/4, SFP, DVI-D IN, HDMI IN, DP IN, USB IN (5 V ⎓ 0.5 A), SERVICE ONLY, USB UP	
Output Connector	SDI OUT 1/2/3/4, DVI-D OUT, DP OUT	
Power Sources	Power Rating	24 V ⎓ 7.5 A
	Power Consumption	Max. 180 W* Off Mode: ≤ 0.3 W
AC-DC Adaptor	Manufacturer: Asian Power Devices Inc. (APD) Model: DA-180B24	
	Input: 100-240 V~ 50-60 Hz, 3.5 A Output: 24 V ⎓ 7.5 A Classification by protection type against Electric Shock: Class I equipment	

Environmental Conditions	Operating Conditions	Temperature	0 ℃ to 40 ℃ (32 ℉ to 104 ℉)
		Humidity	0 % to 80 %
		Pressure	700 hPa to 1060 hPa
	Storage / Transport Conditions	Temperature	-20 ℃ to 60 ℃ (-4 ℉ to 140 ℉)
		Humidity	0 % to 85 %
		Pressure	500 hPa to 1060 hPa

Monitor Size		
Dimensions (Width x Height x Depth)	764.6 x 480.8 x 94.4 (mm)	30.1 x 18.9 x 3.7 (inches)
Weight (Without Packaging)	13.5 (kg)	29.7 (lbs)

Medical Specifications	Classification by protection type against Electric Shock	Class I equipment
	Classification according to the degree of protection against ingress of water or particulate matter	Front: IP35 Except for Front: IP32
	Mode of operation	Continuous Operation
	Environment of Use	This equipment is not suitable for use in the presence of flammable anesthetic or oxygen.

* The Operating Mode of Power Consumption is measured with LGE test standard. (Full White pattern, Maximum resolution)
* The Power Consumption level can be different by operating condition and monitor setting.

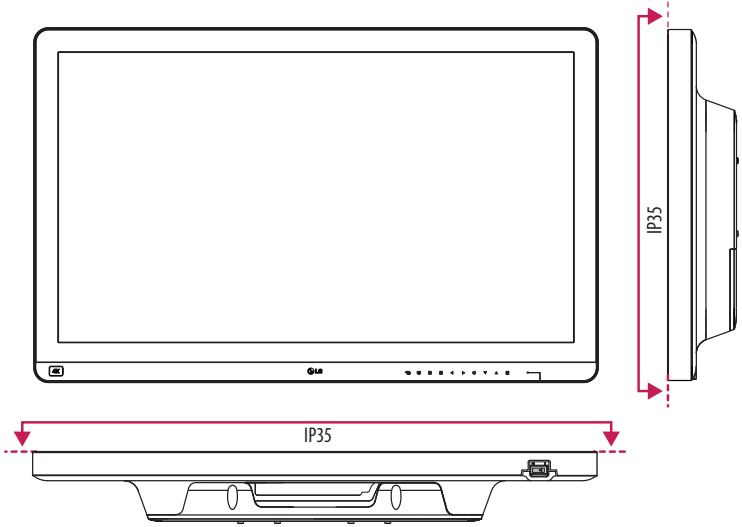
IP35
IP35

Support Mode (Preset Mode - PC)

DisplayPort

Resolution	Horizontal Frequency (kHz)	Vertical Frequency (Hz)	Polarity (H/V)	Remarks
640 x 480	31.469	59.94	-/-	
800 x 600	37.879	60.317	+/+	
1024 x 768	48.363	60	-/-	
1152 x 864	54.347	60.05	+/+	
1280 x 720	45.00	60.00	+/+	
1280 x 1024	63.981	60.02	+/+	
1600 x 900	60.00	60.00	+/+	
1920 x 1080	67.5	60	+/-	
2560 x 1440	88.79	59.95	+/-	
3840 x 2160	66.66	30	+/-	
3840 x 2160	133.32	60	+/-	Recommended

HDMI

Resolution	Horizontal Frequency (kHz)	Vertical Frequency (Hz)	Polarity (H/V)	Remarks
640 x 480	31.469	59.94	-/-	
800 x 600	37.879	60.317	+/+	
1024 x 768	48.363	60	-/-	
1152 x 864	54.347	60.05	+/+	
1280 x 720	45.00	60.00	+/+	
1280 x 1024	63.981	60.02	+/+	
1600 x 900	60.00	60.00	+/+	
1920 x 1080	67.5	60	+/-	
2560 x 1440	88.79	59.95	+/-	
3840 x 2160	67.5	30	+/-	
3840 x 2160	135	60	+/-	for [HDMI ULTRA HD Deep Color]: [On] Recommended

DVI-D

Resolution	Horizontal Frequency (kHz)	Vertical Frequency (Hz)	Polarity (H/V)	Remarks
640 x 480	31.469	59.94	-/-	
800 x 600	37.879	60.317	+/+	
1024 x 768	48.363	60	-/-	
1152 x 864	54.347	60.05	+/+	
1280 x 720	45.00	60.00	+/+	
1280 x 1024	63.981	60.02	+/+	
1600 x 900	60.00	60.00	+/+	
1920 x 1080	67.5	60	+/-	Recommended

Support Mode (Video)

DVI-D, HDMI, DisplayPort

Vertical dimensions	Vertical Frequency (Hz)	DVI-D	HDMI 1.4	HDMI 2.0	DisplayPort
480i	59.94/60	-	-	-	-
480p	59.94/60	0	0	0	0
576p	50	0	0	0	-
576i	50	-	-	-	-
720p	59.94/60	0	0	0	0
720p	50	0	0	0	-
1080i	59.94/60	0	0	0	-
1080p	59.94/60	0	0	0	0
1080i	50	0	0	0	-
1080p	50	0	0	0	-
1080p	23.97/24	-	-	0	-
1080p	29.97/30	-	0	0	-
2160p	23.98/24	-	-	0	-
2160p	25	-	-	0	-
2160p	29.97/30	-	-	0	-
2160p	50	-	-	0	-
2160p	59.94/60	-	-	0	-

SDI

SMPTE	Interface	Signal type	Image Format	Signal Format	Sampling Structure	Pixel Depth	Field/Frame Rate	SDI	SFP	Remark
259M	SD-SDI	-	720 x 486[1)]	4 : 2 : 2	YCbCr	10 bit	59.94i	0	0	
			720 x 576	4 : 2 : 2	YCbCr	10 bit	50i	0	0	
292M	HD-SDI	-	2048 x 1080	4 : 2 : 2	YCbCr	10 bit	30p, 29.97p, 25p, 24p, 23.98p	0	0	
							60i, 59.94i, 50i, 48i, 47.95i	0	0	
			1920 x 1080	4 : 2 : 2	YCbCr	10 bit	30p, 29.97p, 25p, 24p, 23.98p	0	0	
							60i, 59.94i, 50i, 48i, 47.95i	0	0	
			1280 x 720	4 : 2 : 2	YCbCr	10 bit	60p, 59.94p, 50p, 30p, 29.97p, 25p	0	0	
ST 425-1	3G-SDI	Level A	1280 x 720	4 : 4 : 4	RGB / YCbCr	10 bit	60p, 59.94p, 50p, 30p, 29.97p, 25p	0	0	
		Level A / Level B-DL	2048 x 1080	4 : 4 : 4	RGB / YCbCr	12 bit / 10 bit	30p, 29.97p, 25p, 24p, 23.98p	0	0	
							60i, 59.94i, 50i, 48i, 47.95i	0	0	
				4 : 2 : 2	YCbCr	10 bit	60p, 59.94p, 50p, 48p, 47.95p	0	0	
						12 bit	30p, 29.97p, 25p, 24p, 23.98p	0	0	
							60i, 59.94i, 50i	0	0	
			1920 x 1080	4 : 4 : 4	RGB / YCbCr	12 bit / 10 bit	30p, 29.97p, 25p, 24p, 23.98p	0	0	
							60i, 59.94i, 50i, 48i, 47.95i	0	0	
				4 : 2 : 2	YCbCr	10 bit	60p, 59.94p, 50p, 48p, 47.95p	0	0	
						12 bit	30p, 29.97p, 25p, 24p, 23.98p	0	0	
							60i, 59.94i, 50i	0	0	

SMPTE	Interface	Signal type	Image Format	Signal Format	Sampling Structure	Pixel Depth	Field/Frame Rate	SDI	SFP	Remark
ST 425-5	Quad-Link 3G-SDI[2)]	Level A / Level B-DL	4096 x 2160	4 : 4 : 4	RGB & YCbCr	12 bit / 10 bit	30p, 29.97p, 25p, 24p, 23.98p	0	-	2-sample interleave division square division
				4 : 2 : 2	YCbCr	10 bit	60p, 59.94p, 50p	0	-	
						12 bit	30p, 29.97p, 25p, 24p, 23.98p	0	-	
			3840 x 2160	4 : 4 : 4	RGB & YCbCr	12 bit / 10 bit	30p, 29.97p, 25p, 24p, 23.98p	0	-	
				4 : 2 : 2	YCbCr	10 bit	60p, 59.94p, 50p	0	-	
						12 bit	30p, 29.97p, 25p, 24p, 23.98p	0	-	
ST 2081-10 (Mode 1)	6G-SDI	-	4096 x 2160	4 : 2 : 2	YCbCr	10 bit	30p, 29.97p, 25p, 24p, 23.98p	0	0	
			3840 x 2160	4 : 2 : 2	YCbCr	10 bit	30p, 29.97p, 25p, 24p, 23.98p	0	0	
ST 2082-10 (Mode 1)	12G-SDI	-	4096 x 2160	4 : 4 : 4	RGB & YCbCr	12 bit / 10 bit	30p, 29.97p, 25p, 24p, 23.98p	0	0	
				4 : 2 : 2	YCbCr	10 bit	60p, 59.94p, 50p, 48p, 47.95p	0	0	
						12 bit	30p, 29.97p, 25p, 24p, 23.98p	0	0	
			3840 x 2160	4 : 4 : 4	RGB & YCbCr	12 bit / 10 bit	30p, 29.97p, 25p, 24p, 23.98p	0	0	
				4 : 2 : 2	YCbCr	10 bit	60p, 59.94p, 50p, 48p, 47.95p	0	0	Recommend 60p
						12 bit	30p, 29.97p, 25p, 24p, 23.98p	0	0	

1) The signal 720 x 486/59.94i is described as "480i" with the signal format of OSD menu in this manual.

2) Square division & 2-sample interleave division

Power indicator

Mode	LED Color
On Mode	Green

NOTE

- Vertical Frequency: In order to display an image, the screen must be refreshed dozens of times per second, like a fluorescent lamp. The number of times the screen is refreshed per second is called vertical frequency, or refresh rate, and is represented by Hz.
- Horizontal Frequency: The time it takes to display one horizontal line is called the horizontal cycle. If 1 is divided by the horizontal interval, the result is the number of horizontal lines displayed per second. This is called horizontal frequency and is represented by kHz.
- Check if the graphics card's resolution or frequency is within the range allowed by the monitor and in Windows set it to the recommended (optimal) resolution in Control Panel > Display > Settings. (May differ depending on your operating system (OS).)
- Not setting the video card to the recommended (optimal) resolution may result in blurred text, a dimmed screen, a truncated display area or misalignment of the display.
- The setting methods may be different depending on the computer or operating system, and some resolutions may not be available depending on the performance of the graphics card. If this is the case, contact the manufacturer of the computer or graphics card for assistance.
- Normal graphics cards do not support 3840 x 2160 resolution. If the resolution cannot be displayed, contact the manufacturer of your graphics card.

EXTERNAL CONTROLLER SETUP

The actual product may differ from the picture shown.

Connect the RS-232C (serial connector) of the PC to the RS-232C IN connector at the back of the monitor.

Purchase a cable to connect the RS-232C connectors, as the cable is not provided as an accessory.

Use an RS-232C cable to remotely control the monitor (see Figure 1).

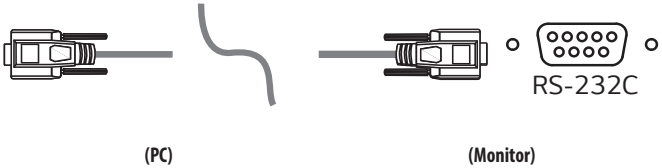

Figure 1: RS-232C Connection Diagram

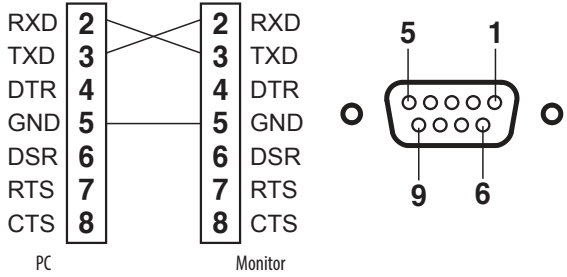

* There are no connections to Pin 1 and Pin 9.

Set ID Function

This function allows you to assign a unique ID to the monitor to control it remotely from your PC.
Please refer to the "Transmission/Reception Protocol".

1 Press the (⋮⋮) button and select [All Settings] > [General] > [RS-232C].
2 Set [RS-232C] to [On].
3 Use the ◀, ▶, ▼, ▲ buttons to select [Set ID]. Then press the (◎) button.
4 Select a [Set ID] to assign. Then press the (◎) button. The [Set ID] can be a value from 1 to 10.
5 In order to exit from the OSD Menu, press the LED Control Button (⋮⋮) or press (◀).

Communication Parameters

- Baud rate: 9600 bps (UART)
- Data length: 8 bits
- Parity bit: None
- Stop bit: 1 bit
- Communication code: ASCII code
- Crossed (reverse) cable used.

Command Reference List

Command	Command1	Command2	Data (Hexadecimal)
01. Power	k	a	00 ~ 01
02. Screen Mute	k	d	00 ~ 01
03. [Input List] (Main)	x	b	00 ~ FF
[Input List] (Sub)	x	c	00 ~ FF
[Input List] (Sub 2)	x	d	00 ~ FF
[Input List] (Sub 3)	x	e	00 ~ FF
04. [Aspect Ratio] (Main)	x	f	00 ~ 02
[Aspect Ratio] (Sub)	x	g	00 ~ 01
[Aspect Ratio] (Sub 2)	x	h	00 ~ 01
[Aspect Ratio] (Sub 3)	x	i	00 ~ 01
05. [PBP / PIP]	k	n	00 ~ 0C
06. [PIP Size]	k	p	00 ~ 02
07. [Main/Sub Screen Change]	m	a	01
08. [Picture Mode]	d	x	00 ~ 14
09. [Brightness]	k	h	00 ~ 64
10. [Contrast]	k	g	00 ~ 64
11. [Sharpness]	k	k	00 ~ 64
12. [Brightness Stabilization]	m	b	00 ~ 01
13. [SUPER RESOLUTION+]	m	c	00 ~ 03
14. [Black Level]	m	d	00 ~ 01
15. [HDMI ULTRA HD Deep Color]	m	e	00 ~ 01

Command	Command1	Command2	Data (Hexadecimal)
16. [DFC]	m	f	00 ~ 01
17. [Response Time]	m	g	00 ~ 03
18. [Black Stabilizer]	m	h	00 ~ 64
19. [Uniformity]	m	i	00 ~ 01
20. [Gamma]	m	j	04 ~ 09
21. [Color Temp]	k	u	00 ~ 04
22. [Red]	j	w	00 ~ 64
23. [Green]	j	y	00 ~ 64
24. [Blue]	j	z	00 ~ 64
25. [Language]	f	i	00 ~ 10
26. [SMART ENERGY SAVING]	m	k	00 ~ 02
27. [LED Control Button]	m	l	00 ~ 03
28. [DVI Power Supply]	m	m	00 ~ 01
29. [Auto Screen Off]	m	n	00 ~ 01
30. [DisplayPort 1.2]	m	o	00 ~ 01
31. [OSD Lock]	k	m	00 ~ 01
32. Reset	f	k	00 ~ 02
33. [Screen Flip] (Main)	t	h	00 ~ 02
[Screen Flip] (SUB)	t	i	00 ~ 02
34. [Failover Input Switch]	k	z	00 ~ 01
35. [Main Input]	k	v	00 ~ 03
36. [Failover Input]	k	w	00 ~ 03
37. [SDI Mode]	x	x	00 ~ 06
38. [SDI Failover]	k	x	00 ~ 01

Transmission/Reception Protocol

Transmission

(Command1)(Command2)( )(Set ID)( )(Data)(Cr)

(Command 1): j, k, m, x, t, f, d

(Command 2): This command is used to control the monitor.

(Set ID): Used to identify the monitor being controlled. (Set ID) can be assigned to each monitor under [General] in the Settings Menu.

A value from 1 to 10 can be assigned. By selecting '0' for the (Set ID) value in the protocol format, you can control all connected monitors.

* The value is displayed as base 10 on the OSD menu and used as base 16 (0x00 - 0x63) in the transmission/reception protocol for remote control.

(Data): Transmits a setting value (Data) required for the command described previously. (base 16)

When the Data 'FF' is sent, the setting value corresponding to the specific command is read (Data read mode).

(Cr): Carriage return, which is '0x0D' in ASCII code.

( ): Space, which is '0x20' in ASCII code.

OK Acknowledgment

(Command2)( )(Set ID)( )(OK)(Data)(x)

When the Data has been successfully received, the monitor sends an ACK response signal in the above format. The Data showing the current state is received in the Data read mode. The Data from the PC is simply returned in the Data write mode.

Error Acknowledgment

(Command2)( )(Set ID)( )(NG)(Data)(x)

When the set receives an abnormal piece of Data for an unsupported function or there is a communication error, it returns ACK in the format above.

Data 00: Illegal code

Actual Data Structure (Base 16 → Base 10)

- See the table below when inserting a base-16 value in (Data).

* Commands may work differently depending on the model and signal.

01. Power (Command: k a)

▶ Controls the On/Off of the power supply to the monitor.

Transmission (k)(a)( )(Set ID)( )(Data)(Cr)

Data

00: Power Off

01: Power On

Ack (a)( )(Set ID)( )(OK/NG)(Data)(x)

02. Screen Mute (Command: k d)

▶ Controls the On/Off of the screen of the monitor.

Transmission (k)(d)( )(Set ID)( )(Data)(Cr)

Data

00: Off

01: On

Ack (d)( )(Set ID)( )(OK/NG)(Data)(x)

03. [Input List] (Main) (Command: x b)

▶ Controls the input mode of the Main.

Transmission (x)(b)( )(Set ID)( )(Data)(Cr)

Data

D0: SDI

90: HDMI

80: DVI

C0: DisplayPort

Ack (b)( )(Set ID)( )(OK/NG)(Data)(x)

[Input List] (Sub) (Command: x c)

▶ Controls the input mode of the Sub.

Transmission (x)(c)( )(Set ID)( )(Data)(Cr)

Data

D0: SDI
90: HDMI
80: DVI
C0: DisplayPort

Ack (c)( )(Set ID)( )(OK/NG)(Data)(x)

[Input List] (Sub 2) (Command: x d)

▶ Controls the input mode of the Sub 2.

Transmission (x)(d)( )(Set ID)( )(Data)(Cr)

Data

D0: SDI
90: HDMI
80: DVI
C0: DisplayPort

Ack (d)( )(Set ID)( )(OK/NG)(Data)(x)

[Input List] (Sub 3) (Command: x e)

▶ Controls the input mode of the Sub 3.

Transmission (x)(e)( )(Set ID)( )(Data)(Cr)

Data

D0: SDI
90: HDMI
80: DVI
C0: DisplayPort

Ack (e)( )(Set ID)( )(OK/NG)(Data)(x)

04. [Aspect Ratio] (Main) (Command: x f)

▶ Adjusts the Aspect Ratio of the Main.

Transmission (x)(f)( )(Set ID)( )(Data)(Cr)

Data

00: [Full Wide]
01: [Original]
02: [Just Scan]

Ack (f)( )(Set ID)( )(OK/NG)(Data)(x)

[Aspect Ratio] (Sub) (Command: x g)

▶ Adjusts the Aspect Ratio of the Sub.

Transmission (x)(g)( )(Set ID)( )(Data)(Cr)

Data

00: [Full Wide]
01: [Original]

Ack (g)( )(Set ID)( )(OK/NG)(Data)(x)

[Aspect Ratio] (Sub 2) (Command: x h)

▶ Adjusts the Aspect Ratio of the Sub 2.

Transmission (x)(h)( )(Set ID)( )(Data)(Cr)

Data

00: [Full Wide]
01: [Original]

Ack (h)( )(Set ID)( )(OK/NG)(Data)(x)

[Aspect Ratio] (Sub 3) (Command: x i)

▶ Adjusts the Aspect Ratio of the Sub 3.

Transmission (x)(i)( )(Set ID)( )(Data)(Cr)

Data

00: [Full Wide] 01: [Original]

Ack (i)( )(Set ID)( )(OK/NG)(Data)(x)

05. [PBP / PIP] (Command: k n)

▶ Controls the PBP / PIP mode.

Transmission (k)(n)( )(Set ID)( )(Data)(Cr)

Data

00: Off 01: 2PBP

09: 3PBP 0C: 4PBP

05: PIP_LT 06: PIP_RT

07: PIP_LB 08: PIP_RB

Ack (n)( )(Set ID)( )(OK/NG)(Data)(x)

06. [PIP Size] (Command: k p)

▶ Adjusts the size of PIP.

Transmission (k)(p)( )(Set ID)( )(Data)(Cr)

Data

00: [Small] 01: [Medium]

02: [Large]

Ack (p)( )(Set ID)( )(OK/NG)(Data)(x)

07. [Main/Sub Screen Change] (Command: m a)

▶ Controls the Swap in the PBP mode.

Transmission (m)(a)( )(Set ID)( )(Data)(Cr)

Data

01: [Main/Sub Screen Change]

Ack (a)( )(Set ID)( )(OK/NG)(Data)(x)

08. [Picture Mode] (Command: d x)

▶ Controls the Picture Mode.

Transmission (d)(x)( )(Set ID)( )(Data)(Cr)

Data

00: [Custom] 01: [Vivid]

07: [REC2020] 0D: [REC709]

0F: [HDR Effect] 11: [Mono]

12: [DICOM] 13: [Calibration 1]

14: [Calibration 2]

Ack (x)( )(Set ID)( )(OK/NG)(Data)(x)

09. [Brightness] (Command: k h)

▶ Adjusts screen brightness.

Transmission (k)(h)( )(Set ID)( )(Data)(Cr)

Data

Min: 00 - Max: 64

Ack (h)( )(Set ID)( )(OK/NG)(Data)(x)

10. [Contrast] (Command: k g)

▶ Adjusts the color contrast of the screen.

Transmission (k)(g)( )(Set ID)( )(Data)(Cr)

Data

Min: 00 - Max: 64

Ack (g)( )(Set ID)( )(OK/NG)(Data)(x)

11. [Sharpness] (Command: k k)

▶ Adjusts the sharpness of the screen.

Transmission (k)(k)( )(Set ID)( )(Data)(Cr)

Data

Min: 00 - Max: 64

Ack (k)( )(Set ID)( )(OK/NG)(Data)(x)

12. [Brightness Stabilization] (Command: m b)

▶ Controls the Brightness Stabilization function.

Transmission (m)(b)( )(Set ID)( )(Data)(Cr)

Data

00: [On] 01: [Off]

Ack (b)( )(Set ID)( )(OK/NG)(Data)(x)

13. [SUPER RESOLUTION+] (Command: m c)

▶ Controls the SUPER RESOLUTION+ function.

Transmission (m)(c)( )(Set ID)( )(Data)(Cr)

Data

00: [High] 01: [Middle]

02: [Low] 03: [Off]

Ack (c)( )(Set ID)( )(OK/NG)(Data)(x)

14. [Black Level] (Command: m d)

▶ Controls the Offset level. (HDMI only)

Transmission (m)(d)( )(Set ID)( )(Data)(Cr)

Data

00: [High] 01: [Low]

Ack (d)( )(Set ID)( )(OK/NG)(Data)(x)

15. [HDMI ULTRA HD Deep Color] (Command: m e)

▶ Controls the HDMI ULTRA HD Deep Color. (HDMI only)

Transmission (m)(e)( )(Set ID)( )(Data)(Cr)

Data

00: [On] 01: [Off]

Ack (e)( )(Set ID)( )(OK/NG)(Data)(x)

16. [DFC] (Command: m f)

▶ Controls the DFC function.

Transmission (m)(f)( )(Set ID)( )(Data)(Cr)

Data

00: [On] 01: [Off]

Ack (f)( )(Set ID)( )(OK/NG)(Data)(x)

17. [Response Time] (Command: m g)

▶ Controls the Response Time.

Transmission (m)(g)( )(Set ID)( )(Data)(Cr)

Data

00: [Faster] 01: [Fast]

02: [Normal] 03: [Off]

Ack (g)( )(Set ID)( )(OK/NG)(Data)(x)

18. [Black Stabilizer] (Command: m h)

▶ Controls the Black Sharpness Optimization function.

Transmission (m)(h)( )(Set ID)( )(Data)(Cr)

Data

Min: 00 - Max: 64

Ack (h)( )(Set ID)( )(OK/NG)(Data)(x)

19. [Uniformity] (Command: m i)

▶ Controls the Uniformity function.

Transmission (m)(i)( )(Set ID)( )(Data)(Cr)

Data

00: [On]

01: [Off]

Ack (i)( )(Set ID)( )(OK/NG)(Data)(x)

20. [Gamma] (Command: m j)

▶ Adjusts the Gamma settings.

Transmission (m)(j)( )(Set ID)( )(Data)(Cr)

Data

04: [Gamma 1.8]

05: [Gamma 2.0]

06: [Gamma 2.2]

07: [Gamma 2.4]

08: [Gamma 2.6]

09: [DICOM Gamma Curve]

Ack (j)( )(Set ID)( )(OK/NG)(Data)(x)

21. [Color Temp] (Command: k u)

▶ Adjusts the color Temp.

Transmission (k)(u)( )(Set ID)( )(Data)(Cr)

Data

00: [Manual]

01: [Custom]

02: [6500K]

03: [7500K]

04: [9300K]

Ack (u)( )(Set ID)( )(OK/NG)(Data)(x)

22. [Red] (Command: j w)

▶ Adjusts the red.

Transmission (j)(w)( )(Set ID)( )(Data)(Cr)

Data

Min: 00 - Max: 64

Ack (w)( )(Set ID)( )(OK/NG)(Data)(x)

23. [Green] (Command: j y)

▶ Adjusts the green.

Transmission (j)(y)( )(Set ID)( )(Data)(Cr)

Data

Min: 00 - Max: 64

Ack (y)( )(Set ID)( )(OK/NG)(Data)(x)

24. [Blue] (Command: j z)

▶ Adjusts the blue.

Transmission (j)(z)( )(Set ID)( )(Data)(Cr)

Data

Min: 00 - Max: 64

Ack (z)( )(Set ID)( )(OK/NG)(Data)(x)

25. [Language] (Command: f i)

▶ Adjusts the language of the Menu screen.

Transmission (f)(i)( )(Set ID)( )(Data)(Cr)

00 - 10: English - Korean (17 languages)

Ack (i)( )(Set ID)( )(OK/NG)(Data)(x)

26. [SMART ENERGY SAVING] (Command: m k)

▶ Adjusts the SMART ENERGY SAVING.

Transmission (m)(k)( )(Set ID)( )(Data)(Cr)

Data

00: [High] 01: [Low]

02: [Off]

Ack (k)( )(Set ID)( )(OK/NG)(Data)(x)

27. [LED Control Button] (Command: m l)

▶ Adjusts the LED ON time of the Control Button.

Transmission (m)(l)( )(Set ID)( )(Data)(Cr)

Data

00: [Always On] 01: [20Sec Time Out]

02: [10Sec Time Out] 03: [5Sec Time Out]

Ack (l)( )(Set ID)( )(OK/NG)(Data)(x)

28. [DVI Power Supply] (Command: m m)

▶ Controls the DVI Power Supply function.

Transmission (m)(m)( )(Set ID)( )(Data)(Cr)

Data

00: [On] 01: [Off]

Ack (m)( )(Set ID)( )(OK/NG)(Data)(x)

29. [Auto Screen Off] (Command: m n)

▶ Adjusts the time to automatically turn the screen off when there is no monitor signal for a set period of time.

Transmission (m)(n)( )(Set ID)( )(Data)(Cr)

Data

00: [On] 01: [Off]

Ack (n)( )(Set ID)( )(OK/NG)(Data)(x)

30. [DisplayPort 1.2] (Command: m o)

▶ Enables or disables DisplayPort 1.2.

Transmission (m)(o)( )(Set ID)( )(Data)(Cr)

Data

00: [Off] 01: [On]

Ack (o)( )(Set ID)( )(OK/NG)(Data)(x)

31. [OSD Lock] (Command: k m)

▶ Controls the OSD Lock function.

Transmission (k)(m)( )(Set ID)( )(Data)(Cr)

Data

00: [Off] 01: [On]

Ack (m)( )(Set ID)( )(OK/NG)(Data)(x)

32. Reset (Command: f k)

▶ Controls the Reset operation.

Transmission (f)(k)( )(Set ID)( )(Data)(Cr)

Data

00: [Picture Reset] 01: Factory Reset

02: [User Preset Reset]

Ack (k)( )(Set ID)( )(OK/NG)(Data)(x)

33. [Screen Flip] (Main) (Command: t h)

▶ Adjusts the screen image rotation of Main screen.

Transmission (t)(h)( )(Set ID)( )(Data)(Cr)

Data

00: [Off] 01: [Mirror]

02: [Rotation]

Ack (h)( )(Set ID)( )(OK/NG)(Data)(x)

[Screen Flip] (Sub) (Command: t i)

▶ Adjusts the screen image rotation of Sub screen.

Transmission (t)(i)( )(Set ID)( )(Data)(Cr)

Data

00: [Off] 01: [Mirror]

02: [Rotation]

Ack (i)( )(Set ID)( )(OK/NG)(Data)(x)

34. [Failover Input Switch] (Command: k z)

▶ Controls the Failover Input Switch function.

Transmission (k)(z)( )(Set ID)( )(Data)(Cr)

Data

00: [Off] 01: [On]

Ack (z)( )(Set ID)( )(OK/NG)(Data)(x)

35. [Main Input] (Command: k v)

▶ Controls the input of the Failover Main.

Transmission (k)(v)( )(Set ID)( )(Data)(Cr)

Data

00: SDI 01: DVI

02: HDMI 03: DisplayPort

Ack (v)( )(Set ID)( )(OK/NG)(Data)(x)

36. [Failover Input] (Command: k w)

▶ Controls the input of the Failover.

Transmission (k)(w)( )(Set ID)( )(Data)(Cr)

Data

00: SDI 01: DVI

02: HDMI 03: DisplayPort

Ack (w)( )(Set ID)( )(OK/NG)(Data)(x)

37. [SDI Mode] (Command: x x)

▶ Selects among the SDI signal processing modes.

Transmission (x)(x)( )(Set ID)( )(Data)(Cr)

Data

00: [Single1] 01: [Single2]

02: [Single3] 03: [Single4]

04: [12G 2-SI(QUAD Link)] 05: [12G Square(QUAD Link)]

06: [SFP]

Ack (x)( )(Set ID)( )(OK/NG)(Data)(x)

38. [SDI Failover] (Command: k x)

▶ Controls the SDI Failover function.

Transmission (k)(x)( )(Set ID)( )(Data)(Cr)

Data

00: [Off] 01: [On]

Ack (x)( )(Set ID)( )(OK/NG)(Data)(x)



WARNING: This equipment is compliant with Class A of CISPR 32. In a residential environment this equipment may cause radio interference.

The model and serial number of the product are located on the back and on one side of the product. Record them below in case you ever need service.

MODEL

SERIAL NO.

Supplier's Declaration of Conformity

Trade Name	LG
Responsible Party	LG Electronics USA, Inc.
Address	111 Sylvan Avenue, North Building, Englewood Cliffs, NJ 07632
E-mail	lg.environmental@lge.com