Scan the QR code to see the manual.

OWNER'S MANUAL

FRIDGE & FREEZER

Before beginning installation, read these instructions carefully. This will simplify installation and ensure that the product is installed correctly and safely. Leave these instructions near the product after installation for future reference.

ENGLISH

MFL72149404
Rev.00_011525

www.lg.com

Copyright © 2025 LG Electronics. All Rights Reserved

TABLE OF CONTENTS

This manual may contain images or content that may be different from the model you purchased.

This manual is subject to revision by the manufacturer.

SAFETY INSTRUCTIONS

READ ALL INSTRUCTIONS BEFORE USE 3
WARNING 3
CAUTION 9

INSTALLATION

Before Installation 11
Levelling the Appliance 11
Turning on the Power 12
Moving the Appliance for Relocation 12

OPERATION

Before Use 14
Product Features 17
Control Panel 20
InstaView 21
Automatic Icemaker 21
Fridge Drawer 25
Door Basket 26
Shelf 26
Freezer Drawer 26

SMART FUNCTIONS

LG ThinQ Application 27
Smart Diagnosis 28

MAINTENANCE

Cleaning 30
Air Filter 30

TROUBLESHOOTING

Before Calling for Service 32

SAFETY INSTRUCTIONS

READ ALL INSTRUCTIONS BEFORE USE

The following safety guidelines are intended to prevent unforeseen risks or damage from unsafe or incorrect operation of the appliance. The guidelines are separated into 'WARNING' and 'CAUTION' as described below.

Safety Messages

⚠	This symbol is displayed to indicate matters and operations that can cause risk. Read the part with this symbol carefully and follow the instructions in order to avoid risk.
⚠	**WARNING** This indicates that the failure to follow the instructions can cause serious injury or death.
⚠	**CAUTION** This indicates that the failure to follow the instructions can cause the minor injury or damage to the product.

WARNING

⚠ WARNING

- To reduce the risk of explosion, fire, death, electric shock, injury or scalding to persons when using this product, follow basic precautions, including the following:

Technical Safety

- This appliance is not intended for use by persons (including children) with reduced physical, sensory or mental capabilities, or lack of experience and knowledge, unless they have been given supervision or instruction concerning use of the appliance by a person

responsible for their safety. Children should be supervised to ensure that they do not play with the appliance.

- This appliance is intended to be used in household and similar applications such as:
  - staff kitchen areas in shops, offices and other working environments;
  - farm houses and by clients in hotels, motels and other residential type environments;
  - bed and breakfast type environments;
  - catering and similar non-retail applications.
- This appliance is not for use in portable or mobile installations, such as marine or RV uses, where it will be in motion while operating.

This symbol alerts you to flammable materials that can ignite and cause a fire if you do not take care.

- This appliance contains a small amount of isobutane refrigerant (R600a), but it is also combustible. When transporting and installing the appliance, care should be taken to ensure that no parts of the refrigerating circuit are damaged.
- The refrigerant and insulation blowing gas used in the appliance require special disposal procedures. Consult with service agent or a similarly qualified person before disposing of them.
- Do not damage the refrigerant circuit.
- Refrigerant leaking out of the pipes could ignite or cause an explosion.
- If the power cord is damaged or the hole of the outlet socket is loose, it must be replaced. Do not use the power cord and contact an authorized service centre in order to avoid a hazard.
- Do not locate multiple portable socket-outlets or portable power supplies at the rear of the appliance.
- Securely plug the power plug in the outlet socket after completely removing any moisture and dust.

- Never unplug the appliance from the power supply by pulling on the power cable. Always grip the power plug firmly and pull straight out from the outlet socket.
- Keep ventilation openings, in the appliance enclosure or in the built-in structure, clear of obstruction.
- Do not store explosive substances such as aerosol cans with a flammable propellant in this appliance.
- Do not tilt the appliance to pull or push it when transporting.
- When positioning the appliance, ensure the supply cord is not trapped or damaged.
- Do not use mechanical devices or other means to accelerate the defrosting process.
- Do not use a hair drier to dry the inside of the appliance or place a candle inside to remove the odours.
- Do not use electrical appliances inside the food storage compartments of the appliance, unless they are of the type recommended by the manufacturer.
- Make sure not to get a body part such as a hand or foot stuck while moving the appliance.
- Disconnect the power cord before cleaning the appliance interior or exterior.
- Do not spray water or inflammable substances (toothpaste, alcohol, thinner, benzene, flammable liquid, abrasive, etc.) over the interior or exterior of the appliance to clean it.
- Do not clean the appliance with brushes, cloths or sponges with rough surfaces or which are made of metallic material.
- Only qualified service personnel from LG Electronics service centre should disassemble or repair the appliance.

Risk of Fire and Flammable Materials

- If a leak is detected, avoid any naked flames or potential sources of ignition and air the room in which the appliance is standing for several minutes. In order to avoid the creation of a flammable gas air mixture if a leak in the refrigerating circuit occurs, the size of the

room in which the appliance is used should correspond to the amount of refrigerant used. The room must be 1 m^2 in size for every 8 g of R600a refrigerant inside the appliance.

- Refrigerant leaking out of the pipes could ignite or cause an explosion.
- The amount of refrigerant in your particular appliance is shown on the identification plate inside the appliance.

Installation

- This appliance should only be transported by two or more people holding the appliance securely.
- Install the appliance on a firm and level floor.
- Do not install the appliance in a damp and dusty place. Do not install or store the appliance in any outdoor area, or any area that is subject to weathering conditions such as direct sunlight, wind, rain, or temperatures below freezing.
- Do not place the appliance in direct sunlight or expose it to the heat from heating appliances such as stoves or heaters.
- Be careful not to expose the rear of the appliance when installing.
- Install the appliance in a place where it is easy to unplug the power plug of the appliance.
- Be careful not to let the appliance door fall during assembly or disassembly.
- Be careful not to pinch, crush, or damage the power cable during assembly or disassembly of the appliance door.
- Be careful not to point the power plug up or let the appliance lean against the power plug.
- Do not modify or extend the power cable.
- Ensure that the outlet socket is properly grounded, and that the earth pin on the power cord is not damaged or removed from the power plug. For more details on grounding, inquire at an LG Electronics customer information centre.

- This appliance is equipped with a power cord having an equipment-grounding conductor and a grounding power plug. The power plug must be plugged into an appropriate outlet socket that is installed and grounded in accordance with all local codes and ordinances.
- Never start up an appliance showing any signs of damage. If in doubt, consult your dealer.
- Dispose of all packaging materials (such as plastic bags and styrofoam) away from children. The packaging materials can cause suffocation.
- Do not plug the appliance into a multi socket adapter which does not have a power cable (mounted).
- The appliance should be connected to a dedicated power line which is separately fused.
- Do not use a multi-socket outlet which is not properly grounded (portable). It must comply with the technical specifications of the appliance and may only be used for the appliance.

Operation

- Do not use the appliance for any purpose (storage of medical or experimental materials or shipping) other than any domestic household food storage use.
- If water penetrates electrical parts of the appliance, disconnect power plug and contact an LG Electronics customer information centre.
- Unplug the power plug during a severe thunderstorm or lightening or when not in use for a long period of time.
- Do not touch the power plug or the appliance controls with wet hands.
- Do not bend the power cable excessively or place a heavy object on it.
- Immediately unplug the power plug and contact an LG Electronics customer information centre if you detect a strange sound, odour, or smoke coming from the appliance.
- Do not place hands or metallic objects inside the area emitting the cold air, cover or heat releasing grille on the back.

- Do not apply excessive force or impact to the back cover of the appliance.
- Be careful of nearby children when you open or close the appliance door. The door may bump the child and cause injury.
- Avoid the danger of children getting trapped inside the appliance. A child trapped inside the appliance can cause suffocation.
- Do not put animals, such as pets into the appliance.
- Do not place heavy or fragile objects, containers filled with liquid, combustible substances, flammable objects (such as candles, lamps, etc.), or heating devices (such as stoves, heaters, etc.) on the appliance.
- Do not place any electronic appliance (such as heater and mobile phone) inside the appliance.
- If there is a gas leakage (isobutane, propane, natural gas, etc.), do not touch the appliance or power plug and ventilate the area immediately. This appliance uses a refrigerant gas (isobutane, R600a). Although it uses a small amount of the gas, it is still combustible gas. Gas leakage during appliance transport, installation or operation can cause fire, explosion or injury if sparks are caused.
- Do not use or store flammable or combustible substances (ether, benzene, alcohol, chemical, LPG, combustible spray, insecticide, air freshener, cosmetics, etc.) near the appliance.
- This appliance incorporates an earth connection for functional purposes.
- Connect to potable water supply only.
  - If connected to a water supply, connect to a potable water supply only.
- Fill with potable water only.
  - If using an icemaker or dispenser water tank, make sure to fill it with potable water only.

Disposal

- When discarding the appliance, remove the door gasket while leaving the shelves and baskets in place and keep children away from the appliance.

CAUTION

⚠ CAUTION

- To reduce the risk of minor injury to persons, malfunction, or damage to the product or property when using this product, follow basic precautions, including the following:

Installation

- After unpacking, check the appliance for any damage that may have occurred during transit.
- Wait for at least 3 to 4 hours in order to ensure the refrigerant circuit is fully efficient.
- Move the appliance carefully on sensitive floors to avoid damage to the floor.

Operation

- Do not touch frozen food or the metal parts in the freezer compartment with wet or damp hands. It may cause frostbite.
- Do not place glass containers, bottles or cans (especially those containing carbonated drinks) in the freezer compartment, shelves or ice bucket that will be exposed to temperatures below freezing. Contents may expand when frozen, break the container and cause injury.
- The tempered glass on the front side of the appliance door or the shelves can be damaged by an impact. If it is broken, do not touch it with hands.
- Do not hang from the appliance doors, storage room, shelf or climb up into it.

- Do not store an excessive amount of water bottles or containers for side dishes on the door baskets.
- Do not open or close the appliance door with excessive force.
- If the hinge of the appliance door is damaged or operates improperly, stop using the appliance and contact an authorized service centre.
- Prevent animals from nibbling on the power cable or water hose.
- Never eat frozen foods immediately after they have been taken out in the freezer compartment. There is a risk of freezing or the formation of frost blisters. FIRST AID: Immediately hold it under cold running water. Do not pull it away.
- Make sure not to get a hand or foot stuck upon opening or closing the appliance door or door in door.

Maintenance

- This appliance is equipped with maintenance-free LED interior light. Do not remove cover or LED lamp in any attempt to repair or change it. Contact an LG Electronics customer information centre.
- Do not clean glass shelves or covers with warm water when they are cold. They may shatter if exposed to sudden temperature changes.
- Do not insert the shelves upside down. The shelves may fall.
- If ice forms in the freezer compartment, please contact LG Electronics customer service. Do not use sharp-edged objects to remove any frost or ice build-up. Do not use sprays, electric heating devices such as fan heaters, hair dryers, steam cleaners or other heat sources for defrosting. Plastic parts could deform.
- Dispose of the ice inside the ice bucket in the freezer compartment during an extended power outage.

INSTALLATION

Before Installation

Dimensions and Clearances

Too small of a distance from adjacent items may result in the degradation of freezing capability and increased electricity costs. Allow over 50 mm of clearance from each adjacent wall when installing the appliance.

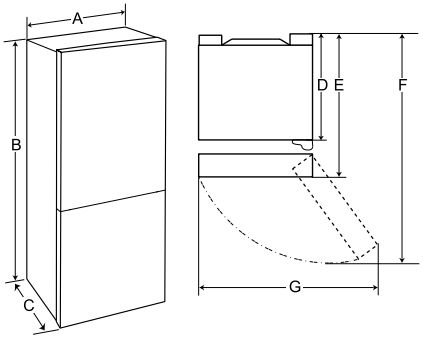

	Size (mm)
A	600
B	1720
C	720
D	632
E	720
F	1262
G	1030

Ambient Temperature

- The appliance is designed to operate within a limited range of ambient temperatures, depending on the climate zone.
- The internal temperatures could be affected by the location of the appliance, the ambient temperature, the frequency of door opening and so on.
- The climate class can be found on the rating label.

Climate Class	Ambient Temperature Range °C
SN (Extended Temperate)	+10 - +32
N (Temperate)	+16 - +32
ST (Subtropical)	+16 - +38 / +18 - +38**
T (Tropical)	+10 - +43* / +16 - +43 / +18 - +43**

* Australia, India, Kenya

** Argentina

NOTE

- The appliances rated from SN to T are intended to be used at an ambient temperature between 10 °C and 43 °C.

Levelling the Appliance

Adjusting the Levelling Leg

If the appliance seems unsteady, or the doors do not close easily, adjust the appliance's tilt using the instructions below.

1 Turn the levelling leg clockwise to raise that side of the appliance or counterclockwise to lower it.

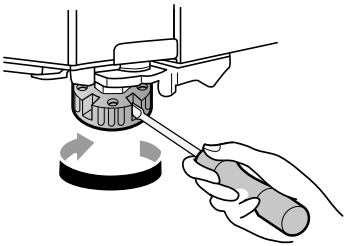

ENGLISH

2 Open the doors and check to make sure that they close easily.

NOTE

- Leveling the doors may not be possible when the floor is not leveled, or is of weak or poor construction.
- The refrigerator is heavy and should be installed on a rigid and solid surface.
- Some timber flooring may cause levelling difficulties if it flexes excessively.

Turning on the Power

Earthing Instructions

This feature is only available on some models.

It is recommended to install an earth wire to prevent electric shock.

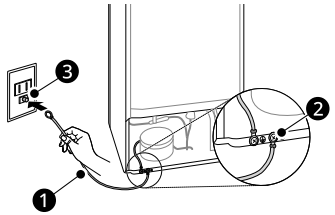

- Connect the earth wire ❶ to the screw ❷ on the back of the appliance and the wall outlet ❸.

⚠ WARNING

- Do not connect the earth wire to gas pipe, water pipe, water tap, telephone earth wire, and lightning rod.

NOTE

- When you install the appliance in a humid or wet location, you must install the earth wire. You are obligated by law to install a circuit breaker in addition to the earth wire. Make sure your appliance is properly installed and earthed by a qualified technician.
- Consult with your retailer or a qualified technician before installing an earth wire. You may be charged for the installation.

Connecting the Appliance

To turn on the appliance, connect the power plug into the outlet socket. Do not double up with other appliances on the same outlet.

NOTE

- After connecting the power supply cord (or plug) to the outlet, wait enough time before you put food into the appliance. If you add food before the appliance has cooled completely, your food may spoil.
- To turn off the appliance, disconnect the power plug from the outlet socket.

Moving the Appliance for Relocation

Moving the Appliance

1 Remove all food from inside the appliance.

2 Fix the power plug.

- Models with a power plug hook:

  Pull the power plug out, insert and fix it into the power plug hook at the rear or on top of the appliance.
- Models without a power plug hook:

  Pull the power plug out and fix the power supply cable with a tape to the side of the appliance where the power socket is located at the installation site.

3 Tape parts such as shelves and the door handle to prevent from falling off while moving the appliance.

4 Move the appliance with more than two people carefully. When transporting the appliance over a long distance, keep the appliance upright.

⚠ CAUTION

- Move the appliance carefully on sensitive floors to avoid damage to the floor.
  - Use cardboard, floor mat or carpet to prevent scratches on the floor when installing or moving the appliance.
  - Do not move the appliance in zigzags.

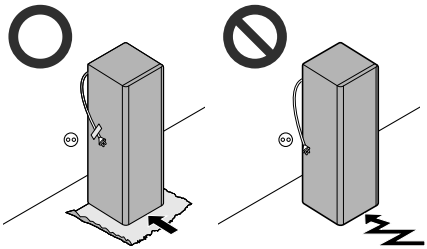

5 After installing the appliance, connect the power plug into a mains outlet socket and switch it on.

OPERATION

Before Use

Notes for Operation

- Before placing food in the appliance, clean the inside and outside of the appliance with warm water and a mild washing-up liquid to remove manufacturing residues.
- Users should keep in mind that frost can form if the door is not closed completely or if the humidity is high during the summer.
- Ensure there is sufficient space between food stored on the shelf or door basket to allow the door to close completely.
- Opening the door for long periods can cause a significant increase of the temperature in the compartments of the appliance.
- If the refrigerating appliance is left empty for long periods, switch off, defrost, clean, dry, and leave the door open to prevent mould developing within the appliance.
- Note that a temperature rise after defrosting has a permissible range in the appliance specifications. If you wish to minimise the impact on the food storage due to a temperature rise, seal or wrap the stored food in several layers.

Door Open Alarm

This feature is only available on some models.

The alarm sounds if the door is left open or not completely closed.

NOTE

- Contact the LG Electronics customer information centre if the alarm sound continues even after closing all doors.

Failure Detection

The appliance can automatically detect problems during the operation.

NOTE

- If a problem is detected, the appliance may not operate and an error code is displayed even when any button is pressed.
- If an error code is indicated on the display, do not turn off the power. Immediately contact the LG Electronics customer information centre and report the error code. If you turn off the power, the repair technician from the our information centre may have difficulty finding the problem.

Suggestion for Energy Saving

- For the most efficient use of energy, keep all inner parts (e.g. door bins, drawers and shelves) on their original location. Altering their positions may result in less efficient energy consumption or performance.
- Ensure there is sufficient space between stored foods. This allows cold air to be circulated evenly and lowers electricity bills.
- Store hot food only after it has cooled in order to prevent dew or frost.
- When storing food in the freezer compartment, set the freezer temperature lower than the temperature indicated on the food.
- Do not set the temperature of the appliance lower than needed.
- Do not put food near the temperature sensor of the fridge compartment. Keep a distance of at least 3 cm from the sensor.

Storing Foods Effectively

- Food may freeze or spoil if stored at the wrong temperature. Set the refrigerator to the correct temperature for the food being stored.
- Store frozen food or refrigerated food inside sealed containers.
- Check the expiration date and label (storage instructions) before storing food in the appliance.

- Do not store food for a long period of time if it spoils easily at a low temperature.
- Do not place unfrozen food in direct contact with food that is already frozen. Do not store excessive amounts of fresh food.
- Freeze food in portion-sized quantities for faster freezing, easier thawing and processing.
- Place the refrigerated food or frozen food in each fridge or freezer compartment immediately after purchasing.
- Store raw meat and fish in suitable containers in the refrigerator, so that it is not in contact with or drip onto other food.
- Refrigerated foods and other food items can be stored on top of the vegetable drawer.
- Avoid refreezing any food which has been completely thawed. Freezing any food which has been completely thawed again will lower its taste and nutrition.
  - Only take out the amount of food that you need. Consume thawed food quickly. It can only be refrozen after being cooked.
- Cool hot food before storing. If too much hot food is placed inside, the internal temperature of the appliance can increase and negatively affect other foods stored in the appliance.
- Do not overfill the appliance. Cold air can not circulate properly if the appliance is overfilled.
- If you set an excessively low temperature for food, it may become frozen. Do not set a temperature lower than the required temperature for the food to be stored correctly.
- If there are chill compartments in the appliance, do not store vegetables and fruits with higher moisture content in the chill compartments as they may freeze due to the lower temperature.
- Always follow the food manufacturer's instructions on the permissible storage duration of frozen food. Do not exceed the recommended storage time of food.
  - Mark the storage date, permissible storage duration, and the food name on the packaging to prevent it from exceeding the storage time limit.
- In the event of a blackout, call the electricity company and ask how long it is going to last.
  - You should avoid door openings while the power is off.
  - When the power supply gets back to normal, check the condition of the food.
  - If the power outage lasts longer, especially during the summer months, please follow these guidelines:

    - Do not place additional food into the appliance during the power outage.

    - If the power outage is announced and is expected to last for more than 10 hours, prepare some ice and put it in a container on the top shelf of the fridge.

    - Due to the temperature increase in the appliance during a power outage or other malfunction, the shelf life of the food will be reduced and its quality will decrease. If necessary, process thawed food and freeze it again in the cooked state.

Maximum Freezing Capacity

- For maximum freezing capacity, set the freezer temperature to the coldest temperature setting.
- **Express Freeze** function will allow the freezer to reach its maximum freezing capacity. This generally takes up to 24 hours and automatically switches off.
- **Express Freeze** must be switched on for 7 hours before fresh products are placed in the freezer compartment.
- To freeze food items quickly, store the food on the right side of the top drawer. Food items will freeze most quickly in the drawer.
- To get better air circulation, insert all inner parts like baskets, drawers, and shelves.

Freezing the Maximum Amount of Food

If large quantities of food are to be stored, the ice bucket should be taken out of the appliance and the food should be stacked directly on the freezer compartment.

NOTE

- You will only get the best air circulation and effectiveness in the freezer compartment when all the drawers are in place.

Product Features

The appearance or components of the appliance may differ from model to model.

Exterior

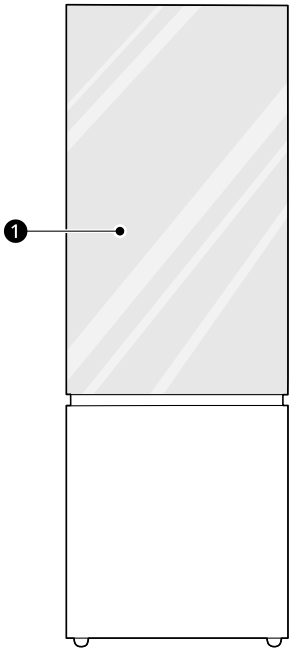

❶ **InstaView**

Knock twice on the glass to turn the LED light inside the **InstaView** on or off.

Interior

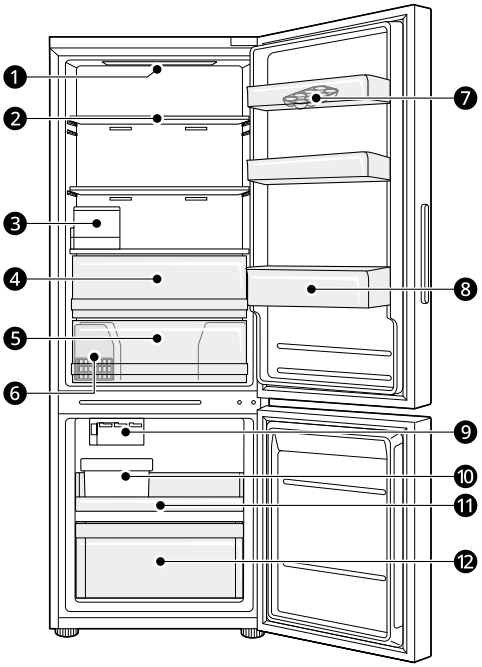

❶ **LED Lamp**

The LED lamps inside the appliance light up when you open the door.

❷ **Fridge Shelf**

Stores refrigerated foods and fresh foods.

- Stores the foods with higher moisture content at the front of the shelf.
- The shelf height can be adjusted by inserting the shelf in another groove of different height.
- The actual number of shelves will differ from model to model.

❸ **Icemaker Water Tank**

Stores water to supply the automatic icemaker. It requires manual filling.

❹ **Fresh Zone**

Keeps fruits and vegetables fresh.

❺ **Fresh Converter**

Stores meat, fish and vegetables.

❻ **Air Filter**

Reduces odours inside the fridge compartment.

❼ **Movable Egg Tray**

Stores eggs.

- You can move this egg tray to a desired position except for the top shelf of the fridge or the vegetable drawer.

❽ **Fridge Door Basket**

Stores small packages of refrigerated foods, drinks and sauce containers.

❾ **Automatic Icemaker**

Produces ice automatically.

❿ **Ice Bucket**

Stores ice from the icemaker.

⓫ **Pull Out Tray**

⓬ **Freezer Drawer**

Stores frozen food for longer storage.

Control Panel

The actual control panel may differ from model to model.

Control Panel and Functions

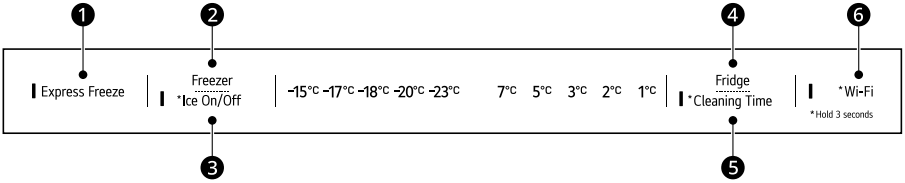

❶ **Express Freeze**

This function can quickly freeze a large amount of ice or frozen foods.

- This function automatically terminates after a specific period has passed.
- When this mode is on, noise may occur and energy consumption may increase.

❷ **Freezer**

Press this button repeatedly to select a desired temperature between -15 °C and -23 °C.

- The default freezer temperature is -18 °C.

❸ **Ice On/Off**

Press the **Ice On/Off** button for 3 seconds to turn the icemaker on/off.

❹ **Fridge**

Press this button repeatedly to select a desired temperature between 1 °C and 7 °C.

- The default fridge temperature is 3 °C.

❺ **Cleaning Time**

This function stops all cooling in the fridge and freezer compartments, but the internal LED works, so it is convenient for cleaning.

- Press the **Cleaning Time** button for 3 seconds to turn on the function.
- This function automatically stops after 15 minutes, and all functions of the refrigerator will be re-operated.

⚠ CAUTION

- This function stops all cooling in the fridge and freezer compartments for 15 minutes. Be careful about storing ice or easily perishable foods.

❻ **Wi-Fi**

This button allows the appliance to connect to a home Wi-Fi network. Refer to **SMART FUNCTIONS** for information on the initial setup of the **LG ThinQ** application.

NOTE

- For optimal food preservation, increasing or decreasing 1 °C or one level from the default temperature is recommended for each compartment.

- The control panel will turn off automatically for energy saving.
- If there is any finger or skin contacts to the control panel while cleaning it, the button function may operate.

InstaView

Using the InstaView

The **InstaView** lets you see if you're running low on frequently used items like beverages and snacks, without opening the fridge door.

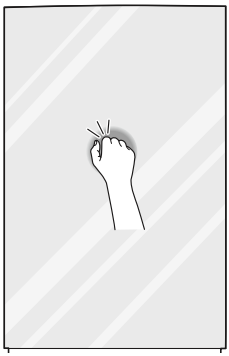

1 Knock twice on the glass to turn the LED light inside the **InstaView** on or off.

2 The LED light turns off automatically after ten seconds.

NOTE

- The **InstaView** function is disabled for 2 seconds after closing the fridge door.
- Knock near the center of the glass. Knocking near the edges of the glass may not activate the **InstaView** function.
- Knock hard enough so that the knocking sound is audible.
- The **InstaView** function may activate if a loud noise occurs near the refrigerator.
- Clean the glass door with a dry cloth. To remove stubborn stains, slightly moisten a clean cloth with lukewarm water or a glass cleaner. Do not spray glass cleaner directly at the glass door.

Automatic Icemaker

Before Using the Freezer Icemaker

⚠ CAUTION

- The first ice and water dispensed may include particles or odour from the water supply line or the water tank.
- If discolored ice is dispensed, check the water tank and the water supply for a possible source. If the problem continues, contact the LG Electronics customer information centre. Do not use the ice or water until the problem is corrected.
- Do not touch the automatic icemaker with your hand or a tool.
- Dispose of the ice inside the ice bucket if you go on vacation or if an extended power outage occurs.

NOTE

- The icemaker produces ice normally when approximately 48 hours have passed after the appliance is initially installed.
- If the ice bucket is completely filled with ice, ice production will stop.
- Sound of ice dropping into the ice bucket is normal.
- If ice cubes are stored in the ice bucket for a long period of time, they may clump together and may not be separated easily. In such a case, empty the ice bucket and allow fresh ice to be made.

NOTE

- You can remove the ice bucket to create more space inside the freezer compartment if you do not use it. Turn the icemaker off before removing the ice bucket.

Freezer Icemaker

The automatic icemaker can automatically make 6 cubes at a time, 30-50 cubes within a 24-hour period if conditions are favorable. This amount may vary according to the environment (ambient temperature around the appliance, frequency of the door being opened, amount of food stored in the appliance, etc.).

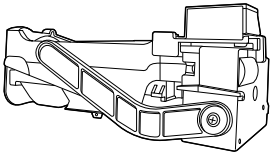

Turning the Automatic Icemaker On or Off

To turn the automatic icemaker On/Off, press and hold the **Ice On/Off** button on the control panel for 3 seconds.

⚠ CAUTION

- Do not keep the power turned on to the icemaker if the water line is not connected. Doing so can damage the icemaker.

Filling the Water Tank

The water tank holds the water which is to be dispensed.

1 Press the **Push** button. Hold the water tank with both hands and pull it up.

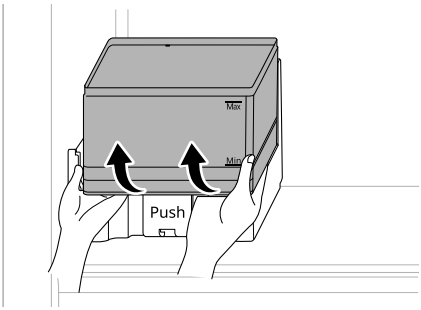

2 Remove the water tank cover.

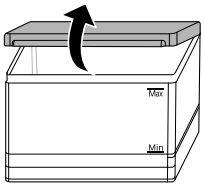

3 Fill the water tank with potable water and close the cap.

4 Mount the water tank in the reverse order of the removal process.

- Push the water tank with force until it clicks into place.

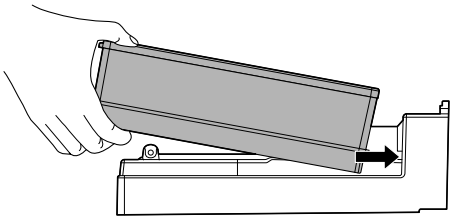

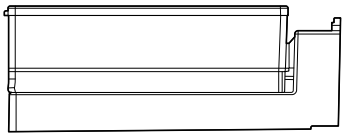

- Make sure the water tank is assembled properly.

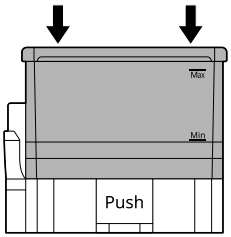

⚠ WARNING

- Fill with potable water only. Do not fill the water tank with beverages or hot water.
- Children should not be allowed near the water tank.

⚠ CAUTION

- Do not apply excessive force or impact when removing or assembling the water dispenser tank.
- Be careful not to bump into the shelf while filling the water tank. The shelf might get lifted and cause the food to fall.

NOTE

- The water tank should be washed before filling it with potable water.
- If water does not come out, fill the water tank with potable water.

Cleaning the Water Tank

Clean water tanks if they have not been used for 48 hours.

1 Press the **Push** button. Hold the water tank with both hands and pull it up.

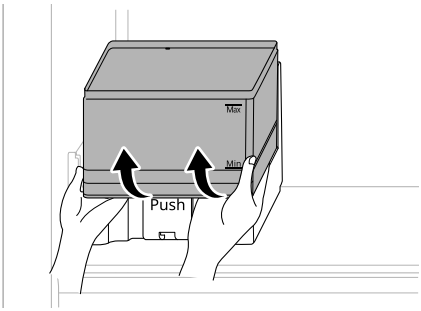

2 Remove the water tank cover.

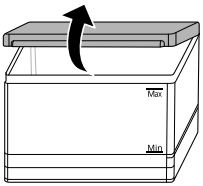

3 Empty the water tank.

4 Wipe any water inside the cap with clean cloth. Pull the hook on the cap. Remove the cap and rubber.

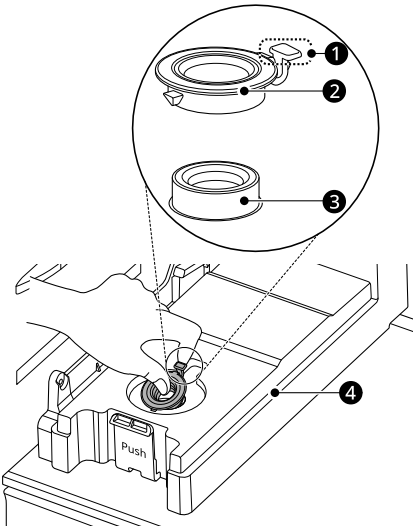

❶ Hook

❷ Cap

❸ Rubber

❹ Water tank tray

5 Clean the water tank, cap, and rubber in running water. Wipe the inside and outside of the water tank, cap, rubber and water tank tray with a clean cloth.

6 Mount the water tank in the reverse order of the removal process.

- Push the water tank with force until it clicks into place.

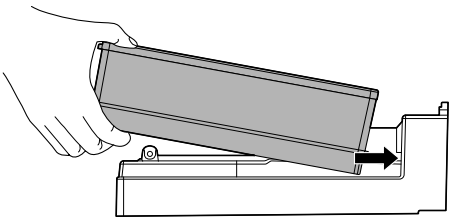

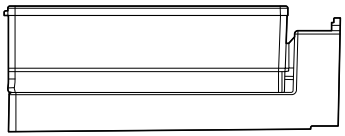

- Make sure the water tank is assembled properly.

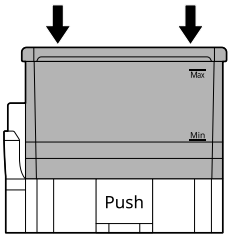

Normal Sounds You May Hear

The icemaker water valve will buzz as the icemaker fills with water. If the **Ice On/Off** button is set to **On**, it will buzz even if it has not yet been hooked up to water. To stop the buzzing, press the **Ice On/Off** button to **Off** position.

NOTE

- You will hear the sound of ice dropping into the ice bucket and water running in the pipes as the icemaker refills.

Preparing for Vacation

If the ambient temperature will drop below freezing, have a qualified technician drain the water supply system to prevent serious property damage due to flooding caused by ruptured water lines or connections.

Set the **Ice On/Off** button to Off and shut off the water supply to the appliance.

⚠ CAUTION

- The ice bucket should be emptied any time the **Ice On/Off** button is turned Off.

Fridge Drawer

Using the Fresh Converter

This feature is only available on some models.

The temperature in the **Fresh Converter** can be controlled by sliding the lever ❶, where located in front of compartment, in either direction.

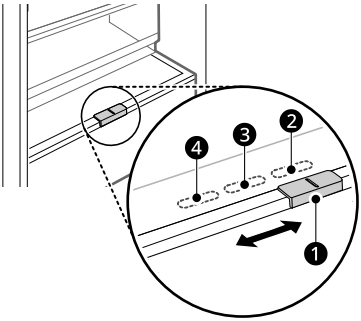

❷ For storing vegetables. (Recommended)

❸ For storing fish.

❹ For storing meat

NOTE

- Do not store vegetables and fruits with **Fish** or **Meat** mode as they may freeze due to the lower temperature.

Using the Fresh Zone

This feature is only available on some models.

Keep fruits and vegetables fresh. Adjust the controller ❶ to meet individual storage needs.

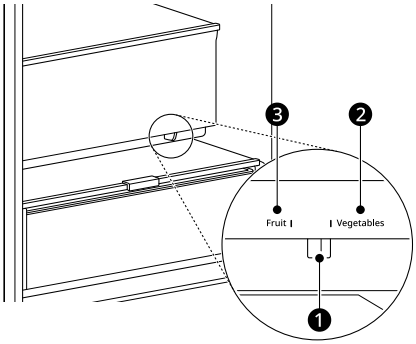

❷ For storing vegetables. (Recommended)

❸ For storing fruit.

Removing/Refitting the Fridge Drawer

1 Remove the contents of the drawer. Hold the handle of the drawer and pull it out completely until it stops.

2 Lift the drawer up and remove it by pulling it out.

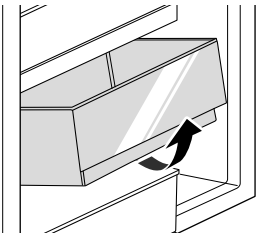

3 Refit the drawer in the reverse order of the removal process.

Door Basket

Removing/Refitting the Door Basket

1 Hold both edges of the basket and remove it by lifting it upward.

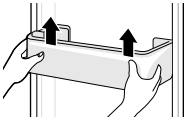

2 Refit the door basket in the reverse order of the removal process.

Shelf

Removing/Refitting the Shelf

1 Hold both sides of the shelf. Lift the shelf up and remove it by pulling it out.

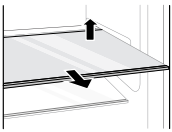

2 Refit the shelf by sliding it inward until the shelf snaps into the frame.

- Check the orientation when refitting the shelf.

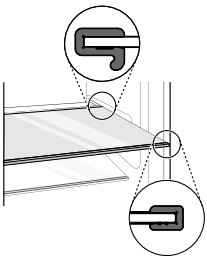

Freezer Drawer

Removing/Refitting the Freezer Drawer

1 Remove the contents of the drawer. Hold the handle of the drawer and pull it out completely until it stops.

2 Lift the drawer up and remove it by pulling it out.

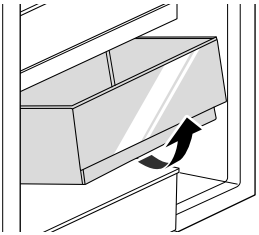

3 Refit the drawer in the reverse order of the removal process.

SMART FUNCTIONS

LG ThinQ Application

This feature is only available on models with Wi-Fi.

The **LG ThinQ** application allows you to communicate with the appliance using a smartphone.

LG ThinQ Application Features

Communicate with the appliance from a smartphone using the convenient smart features.

Smart Diagnosis

- If you experience a problem while using the appliance, this smart diagnosis feature will help you diagnose the problem.

Settings

- Allows you to set various options on the appliance and in the application.

NOTE

- In the following cases, you must update the network information for each appliance in the **LG ThinQ** application under **Device Cards** ⟶ **Settings** ⟶ **Change Network**.
  - wireless router is changed
  - wireless router password is changed
  - Internet service provider is changed
- The application is subject to change for appliance improvement purposes without notice to users.
- Functions may vary by model.

Installing LG ThinQ Application and Connecting an LG Appliance

Models with QR Code

Scan the QR code attached to the product using the camera or a QR code reader application on your smartphone.

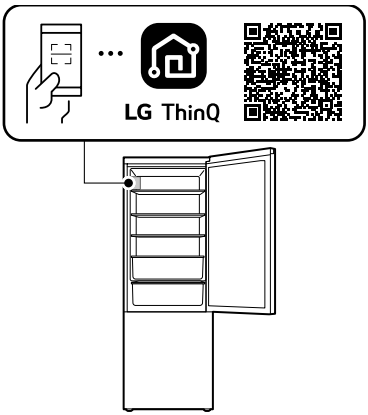

Models without QR Code

1. Search for and install the **LG ThinQ** application from the Google Play Store or Apple App Store on a smartphone.

2. Run the **LG ThinQ** application and sign in with your existing account or create an LG account to sign in.

3. Touch the add (+) button on the **LG ThinQ** application to connect your LG appliance. Follow the instructions in the application to complete the process.

NOTE

- To verify the Wi-Fi connection, check that the Wi-Fi indicator on the control panel is lit.

ENGLISH

NOTE

- The appliance supports 2.4 GHz Wi-Fi networks only. To check your network frequency, contact your Internet service provider or refer to your wireless router manual.
- **LG ThinQ** is not responsible for any network connection problems or any faults, malfunctions, or errors caused by network connection.
- The surrounding wireless environment can make the wireless network service run slowly.
- If the distance between the appliance and the wireless router is too far, the signal strength becomes weak. It may take a long time to connect or installation may fail.
- If the appliance is having trouble connecting to the Wi-Fi network, it may be too far from the router. Purchase a Wi-Fi repeater (range extender) to improve the Wi-Fi signal strength.
- The network connection may not work properly depending on the Internet service provider.
- The Wi-Fi connection may not connect or may be interrupted because of the home network environment.
- The appliance cannot be connected due to problems with the wireless signal transmission. Unplug the appliance and wait about a minute before trying again.
- If the firewall on your wireless router is enabled, disable the firewall or add an exception to it.
- The wireless network name (SSID) should be a combination of English letters and numbers. (Do not use special characters.)
- Smartphone user interface (UI) may vary depending on the mobile operating system (OS) and the manufacturer.
- If the security protocol of the router is set to **WEP**, you may fail to set up the network. Please change it to other security protocols (**WPA2** is recommended) and connect the product again.
- To disable the Wi-Fi function, press and hold the **Wi-Fi** button for 3 seconds. The Wi-Fi indicator will be turned off.
- To reconnect the appliance or add another user, press and hold the **Wi-Fi** button for 3 seconds to temporarily turn it off. Run the **LG ThinQ** application and follow the instructions in the application to connect the appliance.

Open Source Software Notice Information

To obtain the source code that is contained in this product, under GPL, LGPL, MPL, and other open source licenses that have the obligation to disclose source code, and to access all referred license terms, copyright notices and other relevant documents, please visit https://opensource.lge.com.

LG Electronics will also provide open source code to you on CD-ROM for a charge covering the cost of performing such distribution (such as the cost of media, shipping, and handling) upon email request to opensource@lge.com.

This offer is valid to anyone in receipt of this information for a period of three years after our last shipment of this product.

Smart Diagnosis

This feature is only available on some models.

Use this feature to help you diagnose and solve problems with your appliance.

NOTE

- For reasons not attributable to LGE's negligence, the service may not operate due to external factors such as, but not limited to, Wi-Fi unavailability, Wi-Fi disconnection, local app store policy, or app unavailability.
- The feature may be subject to change without prior notice and may have a different form depending on where you are located.

Using LG ThinQ to Diagnose Issues

If you experience a problem with your Wi-Fi equipped appliance, it can transmit troubleshooting data to a smartphone using the **LG ThinQ** application.

- Launch the **LG ThinQ** application and select the **Smart Diagnosis** feature in the menu. Follow the instructions provided in the **LG ThinQ** application.

Using Audible Diagnosis to Diagnose Issues

*1 This control panel is only available on some models.

Follow the instructions below to use the audible diagnosis method.

- Launch the **LG ThinQ** application and select the **Smart Diagnosis** feature in the menu. Follow the instructions for audible diagnosis provided in the **LG ThinQ** application.

1 Open the fridge door.

2 Hold the phone near the **ThinQ** logo on the control panel.

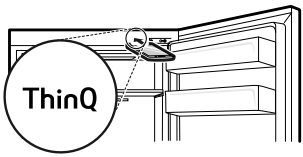

3 Press and hold the **Express Freeze** button for 3 seconds or longer while holding your phone to the speaker until the data transfer is complete.

4 After the data transfer is complete, the diagnosis will be displayed in the application.

NOTE

- For best results, do not move the phone while the tones are being transmitted.

MAINTENANCE

Cleaning

General Cleaning Tips

- Performing manual defrosting, maintenance or cleaning of the appliance while food is stored in the freezer can raise the temperature of the food and reduce its storage life.
- Regularly clean any surfaces that can come in contact with food.
- When cleaning the inside or outside of the appliance, do not wipe it with a rough brush, toothpaste, or flammable materials. Do not use cleaning agents containing flammable substances. This may cause discolouration or damage to the appliance.
  - Flammable substances: alcohol (ethanol, methanol, isopropyl alcohol, isobutyl alcohol, etc.), thinner, bleach, benzene, flammable liquid, abrasive, etc.
- After cleaning, check if the power cable is damaged.

Cleaning the Exterior

- When cleaning the outside air vents of the appliance by means of vacuuming, then the power cord should be unplugged from the outlet to avoid any static discharge that can damage the electronics or cause an electric shock. Regular cleaning of the rear and side ventilation covers is recommended to maintain reliable and economical operation of the unit.
- Keep the air vents on the exterior of the appliance clean. Blocked air vents can cause fire or appliance damage.
- For the appliance exterior, use a clean sponge or soft cloth and a mild detergent in warm water. Do not use abrasive or harsh cleaners. Dry thoroughly with a soft cloth. Do not use contaminated cloths when cleaning the stainless steel doors. Always use a dedicated cloth and wipe in the same direction as the grain. This helps reduce surface staining and tarnishing.

Cleaning the Interior

- Before removing a shelf or drawer from inside the appliance, remove all stored foods from the shelf or drawer to prevent injury or damage to the appliance. Otherwise, injury may occur due to the weight of stored foods.
- Detach the shelves and drawers and clean them with water and a mild detergent, and then dry them sufficiently, before replacing them.
- Regularly wipe the door gaskets and door seals with water and a mild detergent.
- Door basket spills and stains should be cleaned as they can compromise storage ability of the basket and could even be damaged.
- Never clean the shelves, door baskets, or containers in the dishwasher or in hot water. The parts may become deformed, and glass may shatter due to the heat.
- The automatic defrosting system in the appliance ensures that the compartment remains free of ice buildup under normal operating conditions. Users do not need to defrost it manually.

Air Filter

Reusing the Air Filter

This feature is only available on some models.

You can remove the odors absorbed by the Air Filter and reuse it.

If your model includes an LED on the air filter, there is no need to follow the process mentioned below. The LED feature enables the filter to be self-reusable.

1 Pull out the lower fridge drawer.

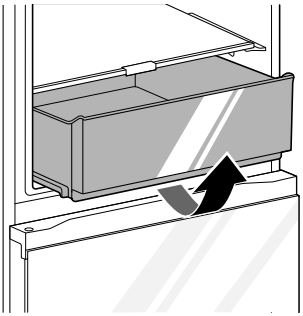

2 Take out the Air Filter.

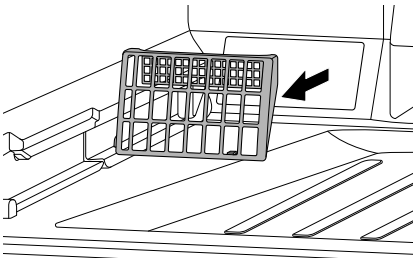

3 Dry it using a hair dryer or by exposing it to sunlight. The filter is reusable.

- To increase deodorizing performance, a natural palm wood material is attached to the filter. If residue falls off, it will not harm you and can be wiped off easily with a towel or cloth.

4 To assemble, first attach the left side, then press on the right side.

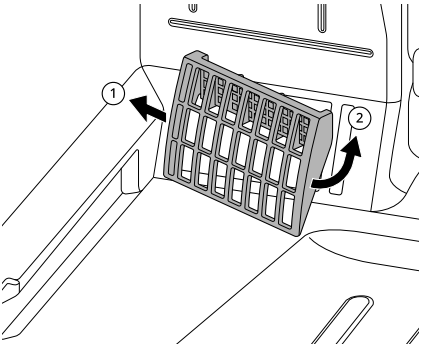

TROUBLESHOOTING

Before Calling for Service

Cooling

Symptoms	Possible Cause & Solution
There is no refrigeration or freezing.	**Is there a power interruption?** • Check the power of other appliances.
	Appliance is unplugged. • Plug the power plug in the outlet properly.
	A fuse in your home may be blown or the circuit breaker tripped. Or the appliance is connected to a GFCI (Ground Fault Circuit Interrupter) outlet, and the outlet's circuit breaker has tripped. • Check the main electrical box and replace the fuse or reset the circuit breaker. Do not increase fuse capacity. If the problem is a circuit overload, have it corrected by a qualified electrician. • Reset the circuit breaker on the GFCI. If the problem persists, contact an electrician.
There is poor refrigeration or freezing.	**Is the fridge or freezer temperature set to its warmest setting?** • Set the fridge or freezer temperature to a colder setting.
	Is the appliance in direct sunlight, or is it near a heat generating object such as cooking oven or heater? • Check the installation area and reinstall it away from heat generating objects.
	Did you store hot food without cooling it first? • Cool the hot food first before putting it in the fridge or freezer compartment.
	Did you put in too much food? • Maintain an appropriate space between food.
	Are the appliance doors completely closed? • Completely close the door and make sure that stored food is not obstructing in the door.
	Is there enough space around the appliance? • Adjust the installation position to make enough space around the appliance.
The appliance contains a bad smell.	**Is the fridge or freezer temperature set to 'Warm'?** • Set the fridge or freezer temperature to a colder setting.

Symptoms	Possible Cause & Solution
The appliance contains a bad smell.	**Did you put in food with a strong smell?** • Store foods with strong smells in sealed containers.
	Vegetables or fruit may have spoiled in the drawer. • Throw away rotten vegetables and clean the vegetable drawer. Do not store vegetables too long in the vegetable drawer.

Condensation & Frost

Symptoms	Possible Cause & Solution
There is condensation inside the appliance or on the bottom of the vegetable drawer cover.	**Did you store hot food without cooling it first?** • Cool the hot food first before putting it inside the fridge or freezer.
	Did you leave the appliance door open? • Although the condensation will disappear soon after you close the appliance door, you can wipe it with a dry cloth.
	Do you open the appliance doors too frequently? • Condensation can form due to the temperature difference from the outside. Wipe out the dampness with a dry cloth and do not open the doors too frequently.
	Did you put warm or moist food inside without sealing it in a container? • Store food in a covered or sealed container.
Frost has formed in the freezer compartment.	**Doors may not be closed properly.** • Check if the food item inside the appliance is blocking the door and make sure that the door is tightly closed.
	Did you store hot food without cooling it first? • Cool the hot food first before putting it in the fridge or freezer compartment.
	Is the air entry or exit of the freezer compartment blocked? • Make sure that air entry or exit is not blocked so that the air can circulate inside.
	Is the freezer compartment overfilled? • Maintain an appropriate space between items.
Frost or condensation has formed inside or outside the appliance.	**Did you open and close the appliance door frequently or is the appliance door improperly closed?** • Frosts or condensation can form if the outside air penetrates inside the appliance. Do not open the doors too frequently.

Symptoms	Possible Cause & Solution
Frost or condensation has formed inside or outside the appliance.	**Is the installation environment humid?** • Condensation can appear on the exterior of the appliance if the installation area is too humid or on a humid day such as a rainy day. Wipe off any moisture with a dry cloth.
The side or front of the appliance is warm.	**There are anti condensation pipes fitted to these areas of the appliance to reduce condensation forming from around the door area.** • The heat releasing pipe to prevent condensation is installed on the front and side of the appliance. You may feel it particularly hot right after the appliance is installed or during the summer. You can be assured that this is not a problem and is quite normal.
There is water inside or outside of the appliance.	**Is there water leakage around the appliance?** • Check if the water has leaked from a sink or another place.
	Is there water on the bottom of the appliance? • Check if the water is from the thawed frozen food or a broken or dropped container.

Parts & Features

Symptoms	Possible Cause & Solution
The appliance door is not closed tightly.	**Is the appliance leaning forward?** • Adjust the front feet to raise the front side slightly.
	Were the shelves properly assembled? • Refit the shelves if needed.
	Did you close the door with excessive force? • If you apply too much force or speed when closing the door, it may remain briefly open before closing. Make sure that you do not slam the door closed. Close without force.
It is difficult to open the appliance door.	**Did you open the door right after you closed it?** • If you try to open the appliance door within one minute after you closed it, you may have difficulties because of the pressure inside the appliance. Try to open the appliance door again in a few minutes so that the internal pressure stabilizes.
The inside lamp in the appliance does not turn on.	**Lamp failure** • Close the door and re-open. If the lamp does not turn on, please contact the LG Electronics customer information centre. Do not attempt removal of the lamp.

Noises

Symptoms	Possible Cause & Solution
The appliance is noisy and generates abnormal sounds.	**Is the appliance installed on a weak floor or improperly levelled?** • Install the appliance on a solid and flat area.
	Does the rear of the appliance touch the wall? • Adjust the installation position to allow enough clearance around the appliance.
	Are objects scattered behind the appliance? • Remove the scattered objects from behind the appliance.
	Is there an object on top of the appliance? • Remove the object on top of the appliance.
Clicking noises	**The defrost control will click when the automatic defrost cycle begins and ends. The thermostat control (or appliance control on some models) will also click when cycling on and off.** • Normal Operation
Rattling noises	**Appliance is not resting evenly on the floor.** • Floor is weak or uneven or levelling legs need to be adjusted.
	Appliance with a compressor was moved while operating. • Normal operation. If the compressor does not stop rattling after three minutes, turn the power to the appliance off and then on again.
Whooshing noises	**Evaporator fan motor is circulating air through the fridge and freezer compartments.** • Normal Operation
	Air is being forced over the condenser by the condenser fan. • Normal Operation
Gurgling noises	**Appliance flowing through the cooling system.** • Normal Operation
Popping noises	**Contraction and expansion of the inside walls due to changes in temperature.** • Normal Operation
Vibrating	**If the side or back of the appliance is touching a cabinet or wall, some of the normal vibrations may make an audible sound.** • To eliminate the noise, make sure that the sides and back do not make any contact with any wall or cabinet.

Wi-Fi

Symptoms	Possible Cause & Solution
Your home appliance and smartphone are not connected to the Wi-Fi network.	**The password for the Wi-Fi that you are trying to connect to is incorrect.** • Find the Wi-Fi network connected to your smartphone and remove it, then register your appliance on **LG ThinQ**.
	Mobile data for your smartphone is turned on. • Turn off the **Mobile data** of your smartphone and register the appliance using the Wi-Fi network.
	The wireless network name (SSID) is set incorrectly. • The wireless network name (SSID) should be a combination of English letters and numbers. (Do not use special characters.)
	The router frequency is not 2.4 GHz. • Only a 2.4 GHz router frequency is supported. Set the wireless router to 2.4 GHz and connect the appliance to the wireless router. To check the router frequency, check with your Internet service provider or the router manufacturer.
	The distance between the appliance and the router is too far. • If the distance between the appliance and the router is too far, the signal may be weak and the connection may not be configured correctly. Move the location of the router so that it is closer to the appliance.

Memo

Memo

Memo

LG