LG

MFL05775112260 4REV01

43UK762H*
50UK762H*
55UK762H*
65UK762H*
75UK762H*





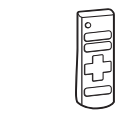

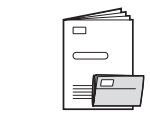

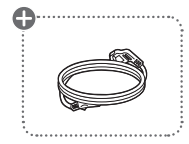

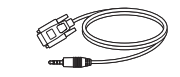

www.lg.com/id-manual PDF

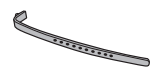

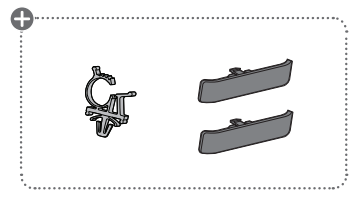

1

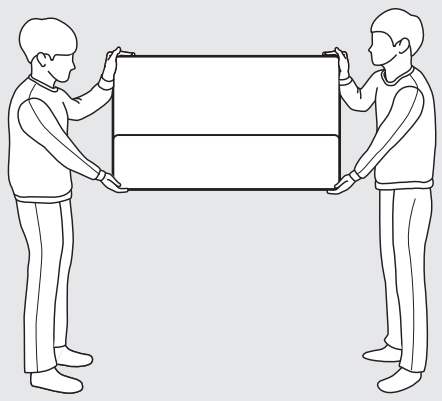

2

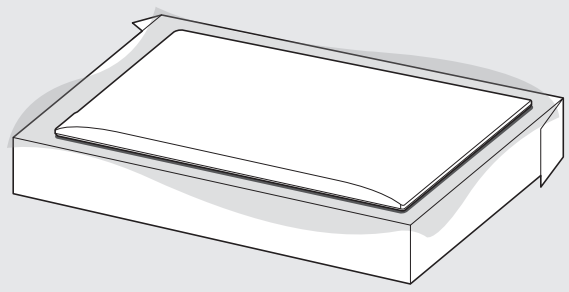

3

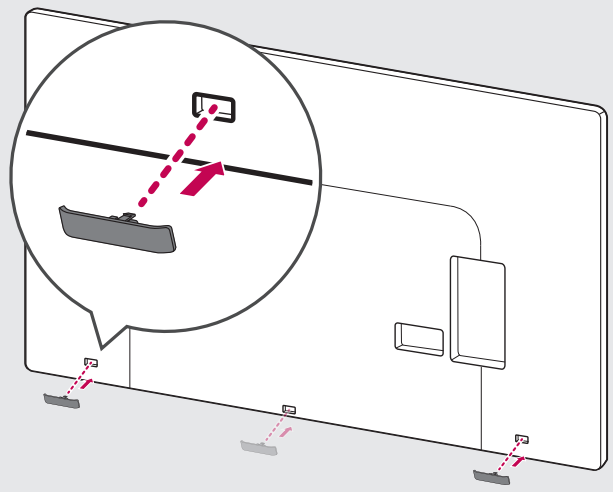

43/50/55/65"

4

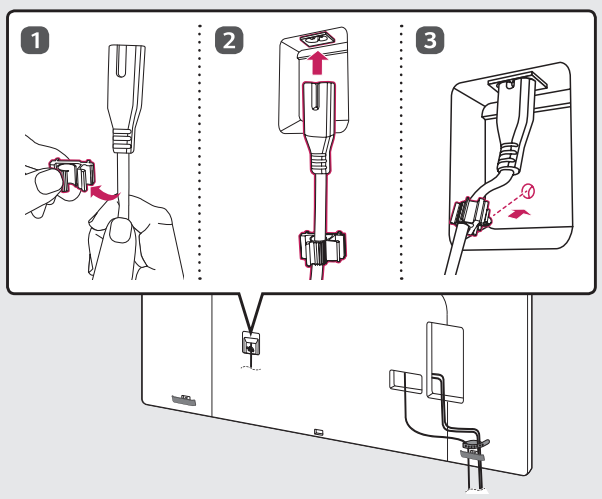

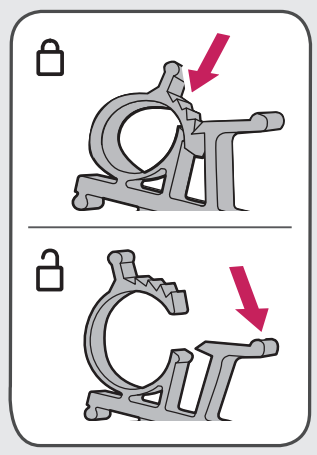

43/50/55/65"

5

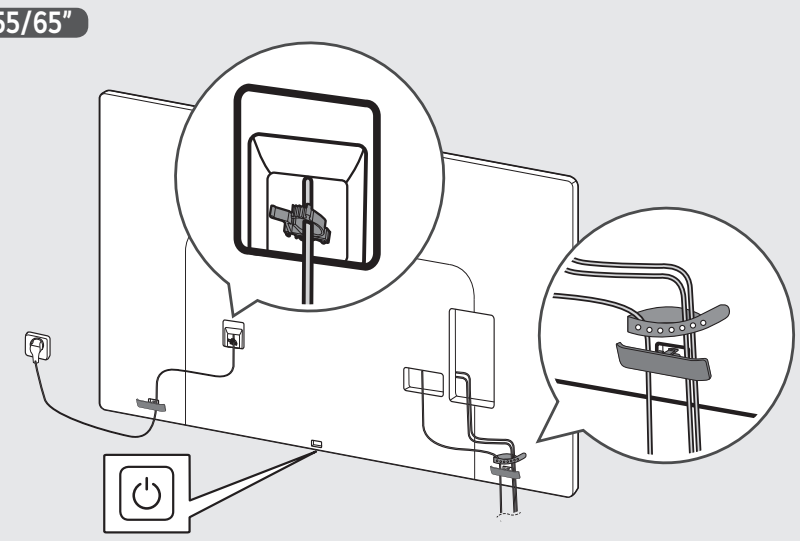

75"

4

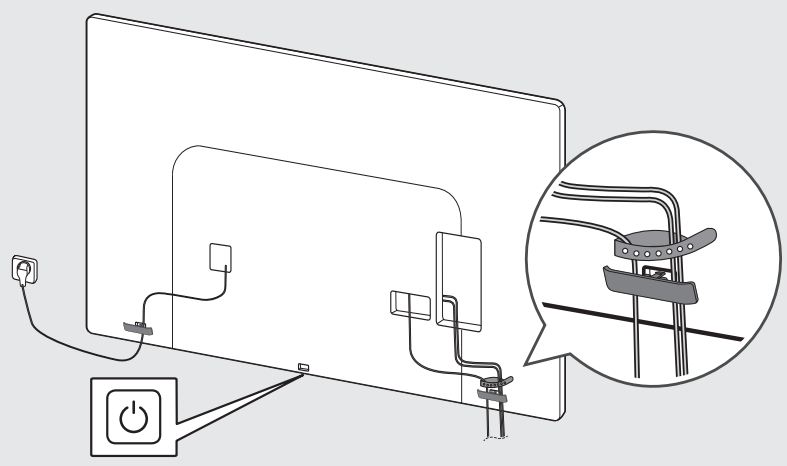

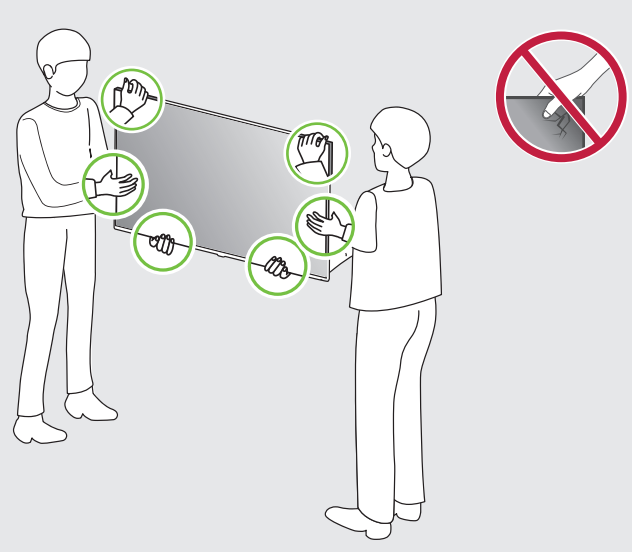

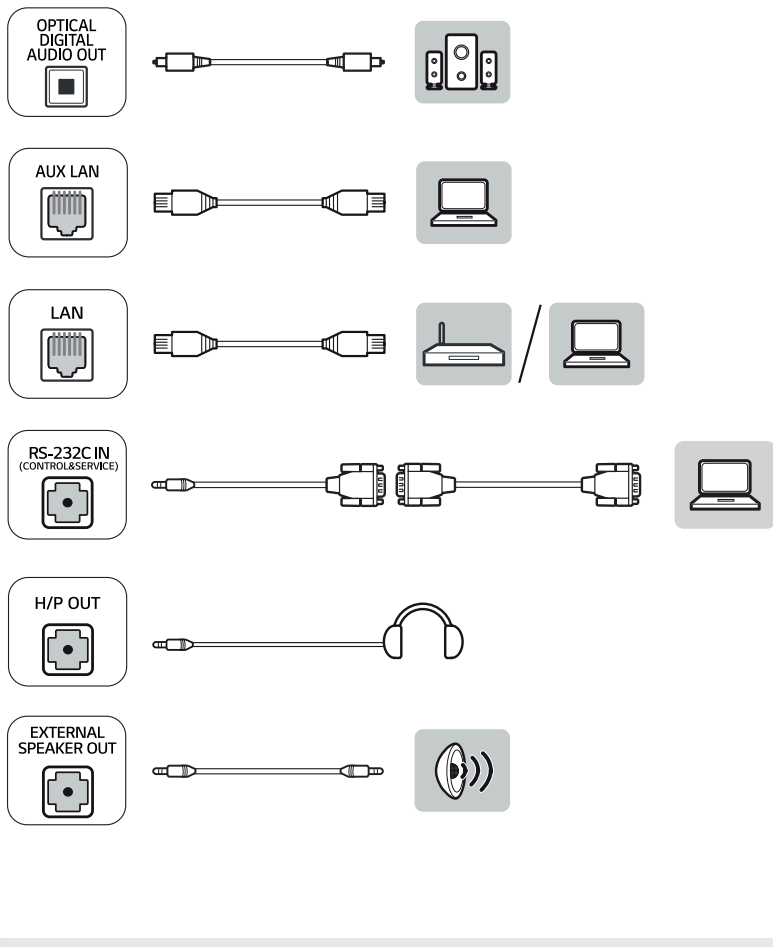

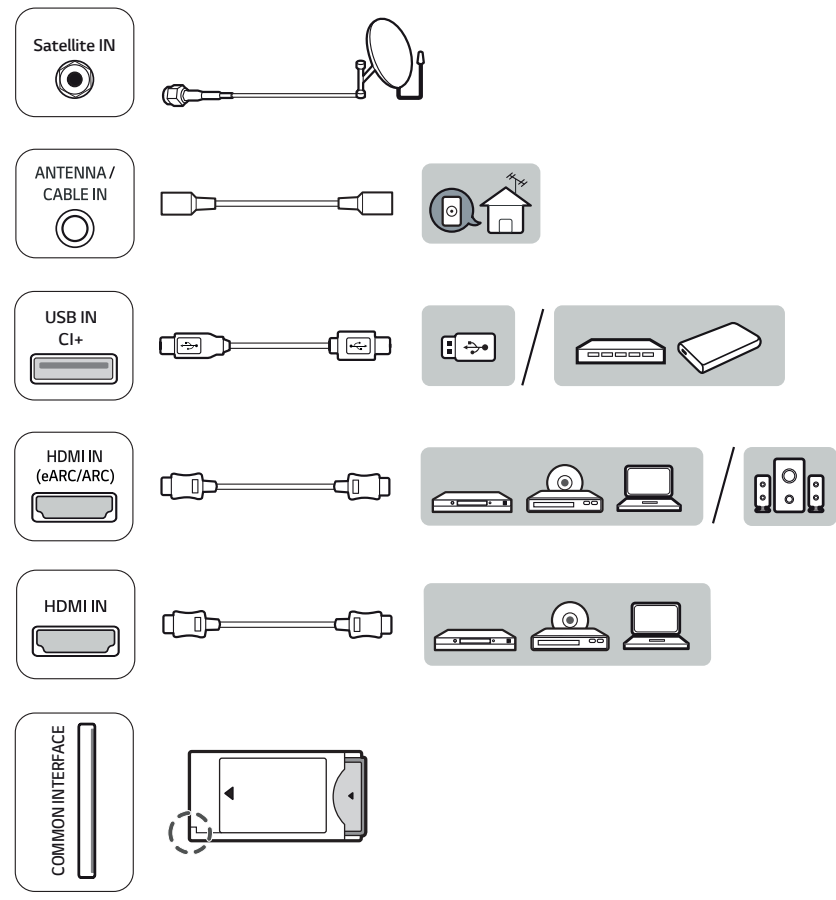

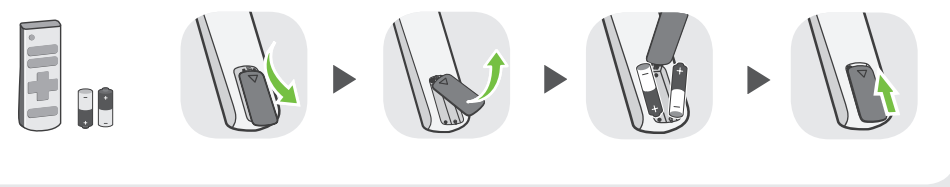

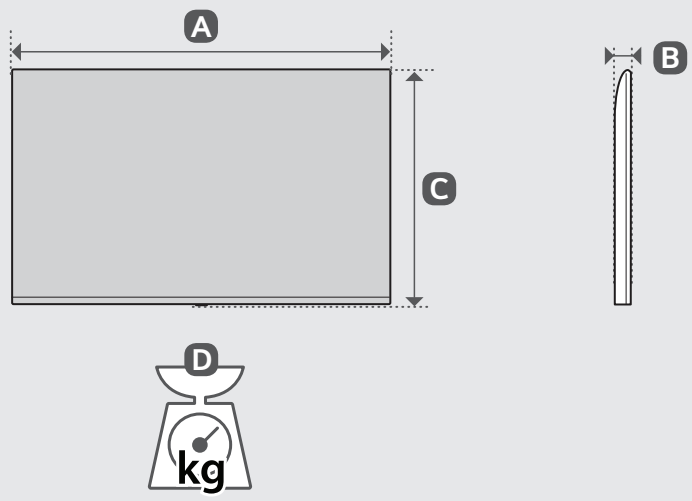

	A	B	C	D
	(mm)			(kg)
43UK762H*	967	57.1	564	8.8
50UK762H*	1121	57.1	651	12.1
55UK762H*	1235	57.5	715	14.0
65UK762H*	1454	57.7	838	21.5
75UK762H*	1678	59.9	964	31.4
Power requirement				AC 100-240 V~ 50/60 Hz