LG
Life's Good

MFL71833916
(2107-REV00)

www.lg.com

LM63*

Quick Start Guide

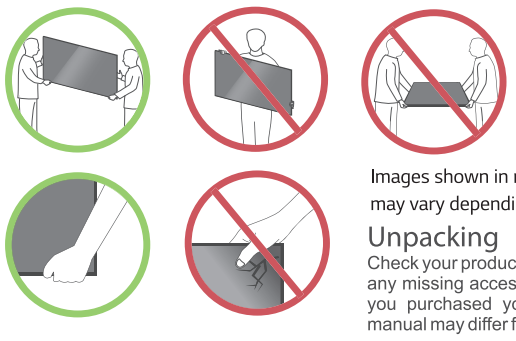

Images shown in manual
may vary depending on model

Unpacking

Check your product box for the following items. If there are any missing accessories, contact the local dealer where you purchased your product. The illustrations in this manual may differ from the actual product and item.

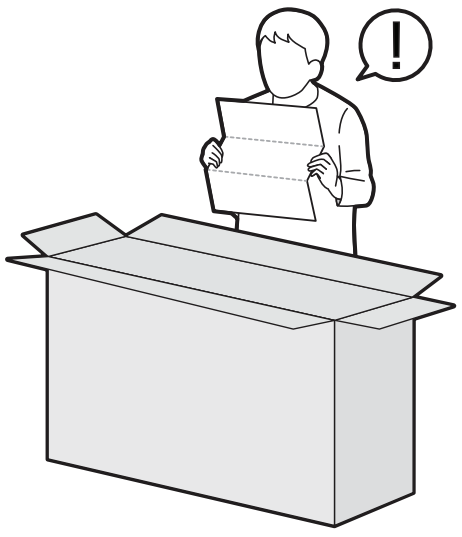

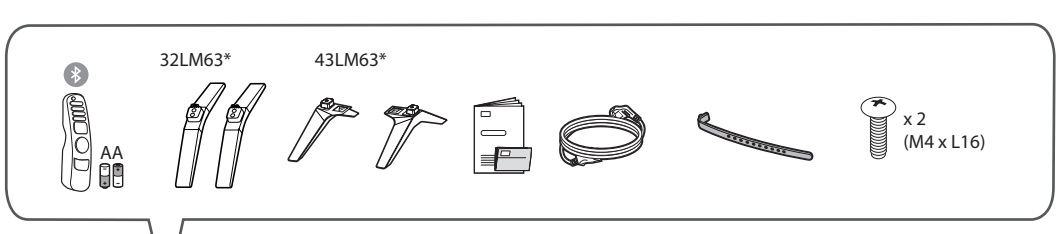

1

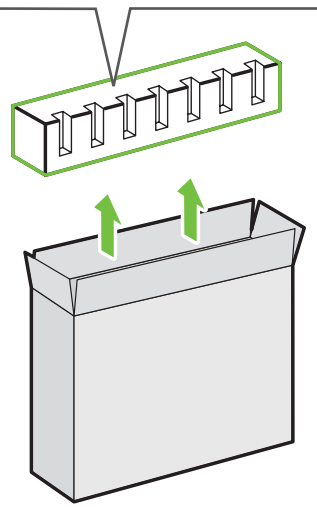

2

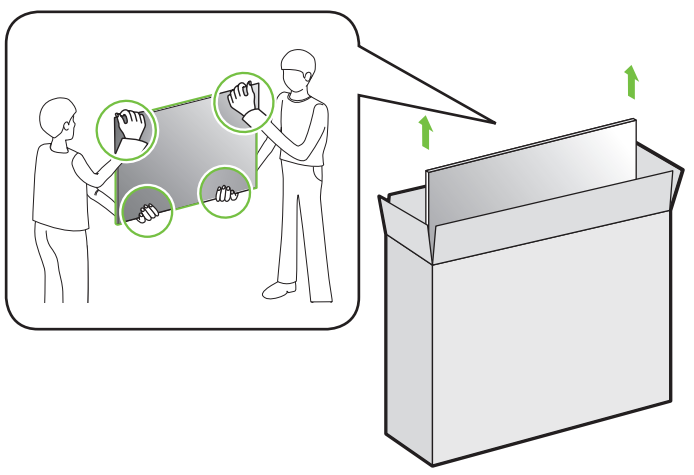

3

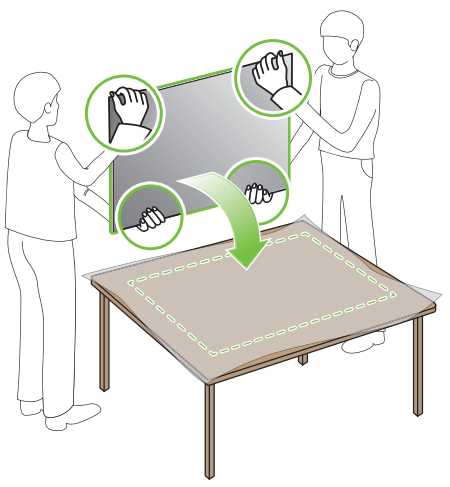

⚠ CAUTION
Image shown may differ from your TV
When attaching the stand to the TV set, place the screen facing down on a cushioned table or flat surface to protect the screen from scratches.

1

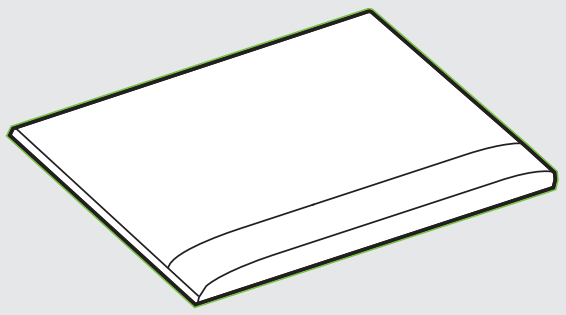

2-A 32LM63*

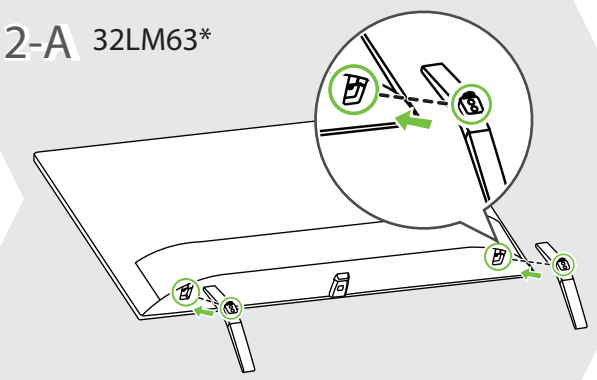

2-B 43LM63*

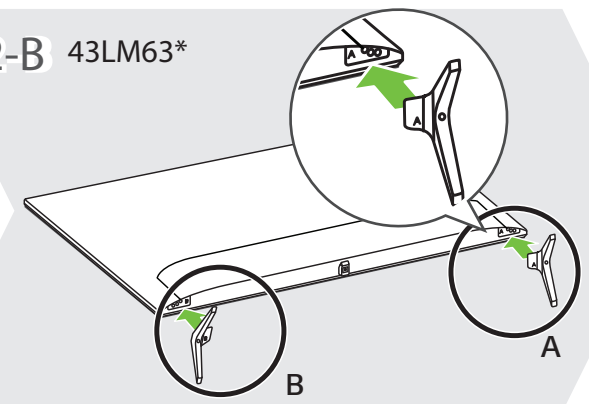

3-A 32LM63*

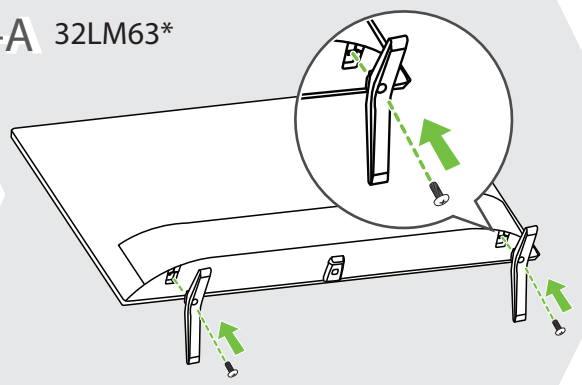

3-B 43LM63*

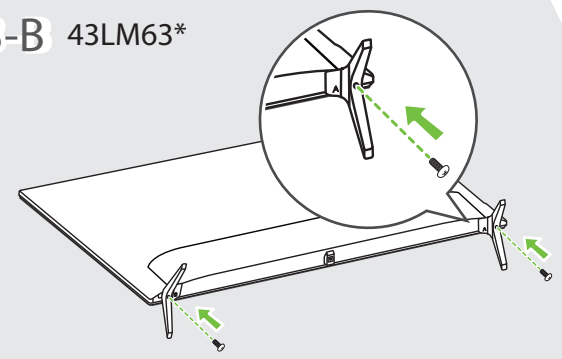

4

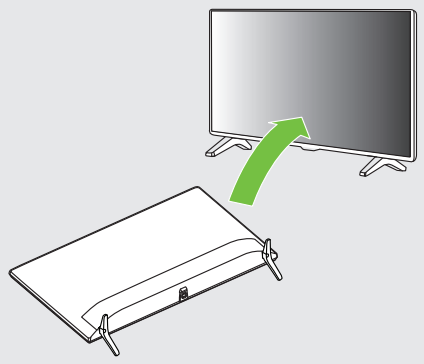

5



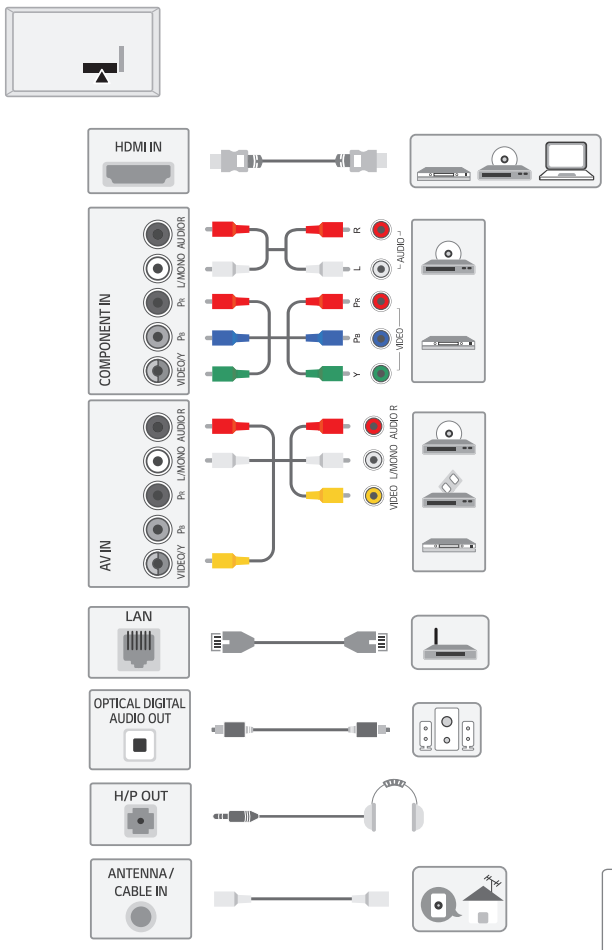

NOTE

- Do not look into the optical output ports, looking at the laser beam may damage your vision
- Audio with ACP (Audio Copy Protection) function may block digital audio output.

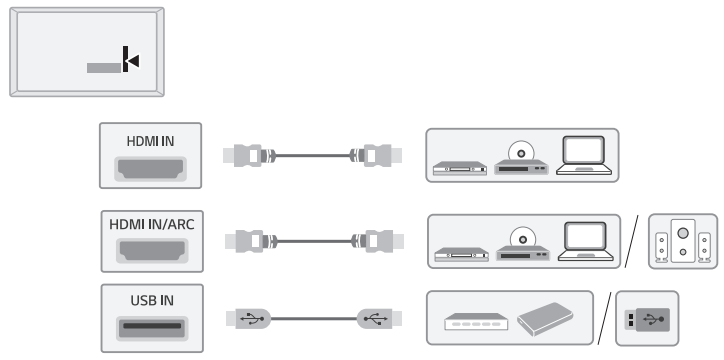

ARC (Audio Return Channel)

- An external audio device that supports SIMPLINK and ARC must be connected using HDMI IN/ARC port
- When connected with a high-speed HDMI cable, the external audio device that supports ARC outputs SPDIF audio without additional audio cable and supports the SIMPLINK function.

NOTE

- Some USB Hubs may not work, if a USB device connected using a USB Hub is not detected, connect it to the USB port on the TV directly
- Connect the external power source if your USB is needed.





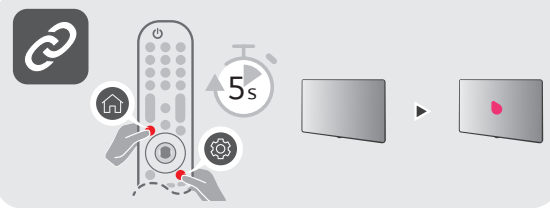

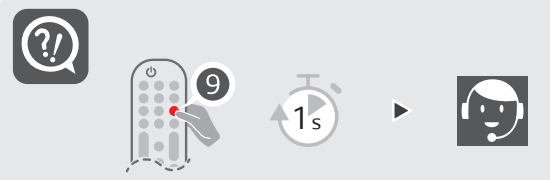

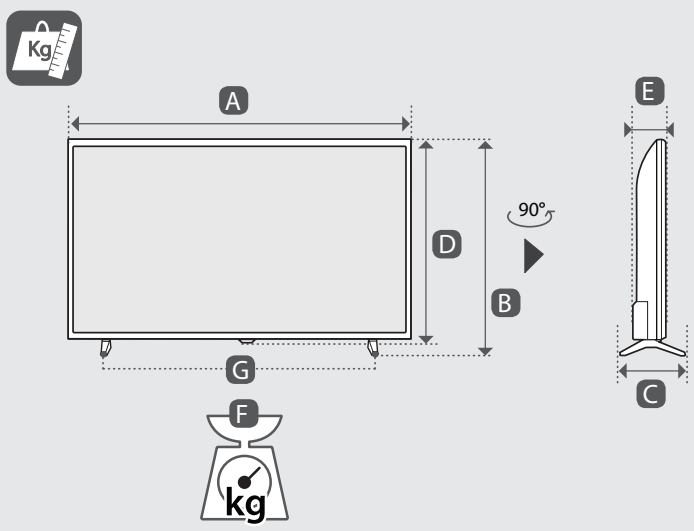

	A	B	C	D	E	F	F - G
	(mm)					(kg)	
32LM6360PTB 32LM636BPTB	736	464	180	437	82.9	5.10	5.05
43LM6360PTB	973	623	216	572	85.0	8.1	8.0
Power requirement				AC 100-240 V ~ 50 / 60 Hz			

- Read **Safety and Reference.**

⊕ : Depending on model

IN002043