Scan to see the online manual.

OWNER'S MANUAL

ELECTRIC RANGE

Read this owner's manual thoroughly before operating the appliance and keep it handy for reference at all times.

ENGLISH

LSEL6330* / LSEL6330*E

MFL57206028
Rev.04_030626

www.lg.com

Copyright © 2024-2026 LG Electronics. All Rights Reserved

TABLE OF CONTENTS

4 IMPORTANT SAFETY INSTRUCTIONS

4 READ ALL INSTRUCTIONS BEFORE USE
- 4 Safety Messages
- 4 Anti-tip Device

5 WARNING
- 5 Installation
- 5 Operation
- 6 Maintenance
- 6 Risk of Fire and Flammable Materials

7 CAUTION
- 7 Operation
- 7 Maintenance

8 PRODUCT OVERVIEW

8 Product Features
- 8 Exterior and Interior
- 8 Product Specifications
- 9 Accessories

10 INSTALLATION

10 Before Installing
- 10 Installation Overview
- 10 Tools Needed
- 11 Parts
- 11 Unpacking and Moving the Range

12 Choosing the Proper Location
- 12 Dimensions and Clearances
- 14 Electricity
- 14 Electrical Connection Requirements
- 14 Flooring
- 14 Ambient Temperature

14 Leveling
- 14 Leveling the Range

15 Optional Rear Filler
- 15 Installing the Rear Filler

15 Anti-tip Device
- 15 Installing the Anti-tip Device

16 Test Run
- 16 Test the Range Before Use

17 OPERATION

17 Control Panel
- 17 Knob Positions

18 Cooktop
- 18 Before Using the Cooktop
- 18 Cooking Areas
- 19 Using the Cooktop Elements
- 20 Using the Oven Knob
- 20 Using the Knob Lock
- 20 The Recommended Surface Cooking Setting
- 21 Using the Proper Cookware

22 Oven
- 22 Before Using the Oven
- 22 Oven Vent
- 22 Using Oven Racks
- 22 Bake
- 23 Recommended Baking and Roasting Guide
- 24 Broil
- 25 Recommended Broiling Guide
- 27 Warm

28 MAINTENANCE

28 Cleaning
- 28 Interior
- 28 Exterior
- 29 Cooktop Surface
- 32 EasyClean
- 34 Removing/Assembling Lift-Off Oven Doors

35 Periodic Maintenance
- 35 Changing the Oven Light

36 TROUBLESHOOTING

36 FAQs
- 36 Frequently Asked Questions

37 Before Calling for Service
- 37 Cooking
- 39 Parts & Features
- 40 Noises

41 LIMITED WARRANTY

41 CANADA

41 TERMS AND CONDITIONS

42 THIS LIMITED WARRANTY DOES NOT COVER:

44 PROCEDURE FOR RESOLVING DISPUTES:

IMPORTANT SAFETY INSTRUCTIONS

READ ALL INSTRUCTIONS BEFORE USE

Download this owner's manual at http://www.lg.com

Safety Messages

Your safety and the safety of others are very important.

We have provided many important safety messages in this manual and on your appliance. Always read and follow all safety messages.

This is the safety alert symbol.

This symbol alerts you to potential hazards that can kill or injure you and others. All safety messages will follow the safety alert symbol and either the word WARNING or CAUTION.

These words mean:

WARNING

You may be killed or seriously injured if you do not follow instructions.

CAUTION

You may be injured or cause damage to the product if you do not follow instructions.

All safety messages will tell you what the potential hazard is, tell you how to reduce the chance of injury, and tell you what may happen if the instructions are not followed.

Anti-tip Device

To reduce the risk of tipping, the appliance must be secured by a properly installed anti-tip device. To check if the device is installed properly, verify that the anti-tip device is engaged, or grasp the top rear edge of the range back guard and carefully attempt to tilt it forward. Refer to the installation section for instructions.

WARNING

- A child or adult can tip the range and be killed.

- Install the anti-tip device to the structure and/or the range. Verify the anti-tip device has been properly installed and engaged by following the guide on the anti-tip bracket template.
- Engage the range to the anti-tip device by following the guide on the anti-tip bracket template. Ensure the anti-tip device is re-engaged when the range is moved by following the guide on the anti-tip bracket template.
- Re-engage the anti-tip device if the range is moved. Do not operate the range without the anti-tip device in place and engaged.
- See installation instructions for details.
- Failure to do so can result in death or serious burns to children or adults.
- Do not rest large, heavy items such as whole turkeys on the open oven door. The range could tip forward and cause injury.

- Do not step or sit on the oven door. The range could be tipped and injury might result from spilled hot liquid, food, or the range itself.

- Never remove the oven legs. The range will not be secured to the anti-tip bracket if the legs are removed.

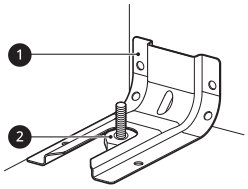

❶Anti-tip bracket

❷Leveling leg

WARNING

⚠ WARNING

- To reduce the risk of explosion, fire, death, electric shock, injury or scalding to persons when using this product, follow basic precautions, including the following:

Installation

- Do not line the oven walls, racks, bottom, or any other part of the oven with aluminum foil or any other material. Doing so will disrupt heat distribution, produce poor baking results and cause permanent damage to the oven interior. (Aluminum foil will melt to the interior surface of the oven.)
- To eliminate the risk of burns or fire by reaching over heated surface units, cabinet storage space located above the surface units should be avoided. If cabinet storage is to be provided, the risk can be reduced by installing a range hood that projects horizontally a minimum of 5 inches beyond the bottom of the cabinets.
- Do not use aluminum foil or any other material to line the oven bottom. Improper installation of these liners may result in a risk of electric shock or fire.
- Make sure your range is properly installed and grounded by a qualified installer, according to the installation instructions. Any adjustment and service should be performed only by qualified range installers or service technicians.

Operation

- Do not leave children alone or unsupervised near the appliance when it is in use or is still hot. Children should never be allowed to sit or stand on any part of the appliance as they could be injured or burned.
- Children should not be allowed to play with controls or other parts of the appliance.
- DO NOT TOUCH HEATING ELEMENTS OR INTERIOR SURFACES OF OVEN. Heating elements may be hot even though they are dark in color. Interior surfaces of an oven become hot enough to cause burns. During and after use, do not touch or let clothing or other flammable materials contact heating elements or interior surfaces of the oven until they have had sufficient time to cool. Other surfaces, such as oven vent openings and surfaces near these openings, oven doors, and windows of oven doors, also get hot and may cause burns if not cooled.
- Surface units may be hot even though they are dark in color. Areas near surface units may become hot enough to cause burns. During and after use, DO NOT TOUCH SURFACE UNITS OR AREAS NEAR UNITS or let clothing or other flammable materials contact surface units or areas near units until they have had sufficient time to cool. This includes the cooktop and the area above the oven door.
- Use care when opening the oven door. The hot air and steam that escape can cause burns to hands, face and eyes. Let hot air or steam escape from the oven before removing or replacing food in the oven.
- Do not use plastic to cover food. Use foil or oven-safe lids only.

- Never attempt to dry a pet in the oven.
- Never use your appliance for warming or heating the room.
- Always use pot holders or oven mitts when removing food from the oven or the surface element. Cookware will be hot. Use only dry pot holders. Moist or damp pot holders on hot surfaces may result in burns from steam. Do not let the pot holder touch hot heating elements. Do not use a towel or other bulky cloth to remove food.
- Do not heat unopened food containers. Pressure in the containers may cause them to burst which may result in injury.
- Be certain that all packing materials are removed from the appliance before operating. Keep plastic, clothes, paper, and other flammable materials away from parts of the appliance that may become hot.
- Do not allow aluminum foil or the temperature probe to contact heating elements.
- Do not touch the hot surface between the bottom of the oven door and the top of the drawer on the front of the oven while the oven is in operation. The surface becomes hot and can cause burns and other injury.
- Do not touch the oven racks while they are hot.
- If a rack must be moved while the oven is hot, do not let the pot holder contact the hot heating element in the oven.
- Pull the oven rack to the stop-lock position when loading and unloading food from the oven. This helps prevent burns caused by touching hot surfaces of the door and oven walls.
- Do not use the oven if a heating element develops a glowing spot during use or shows other signs of damage. A glowing spot indicates the heating element may fail and present a potential burn, fire, or shock hazard. Turn the oven off immediately and have the heating element replaced by a qualified service technician.
- Never allow children to remain unsupervised near the oven or cooktop.
- Keep Oven Vent Duct Unobstructed. Areas near the vent may become hot during operation and may cause burns. Do not block the vent opening. Avoid placing plastics near the vent as heat may distort or melt the plastic.
- Never leave any items on the cooktop. The hot air from the vent may ignite flammable items and will increase pressure in closed containers, which may cause them to burst.

Maintenance

- Do not allow children to crawl into the oven.
- Let hot cookware and utensils cool in a safe place, out of reach of small children.
- If the door glass, cooktop glass, surface, or oven heating unit of the range are damaged, discontinue use of the range and call for service.
- Do not allow anyone to climb, stand or hang on the door, storage drawer or cooktop. They could damage the range and even tip it over, causing severe personal injury.
- Always disconnect power from the appliance before servicing.
- Before replacing the oven light, switch off the electrical power to the oven at the main fuse or circuit breaker panel. Failure to do so can result in severe personal injury, death, or electrical shock.
- Never pour cold water over a hot oven for cleaning. Doing so may cause the oven to malfunction.

Risk of Fire and Flammable Materials

- Do not store or use flammable material in the oven or near or on the cooktop. Flammable materials include paper, plastic, pot holders, linens, wall coverings, curtains, and gasoline or other flammable vapors and liquids such as grease or cooking oil. These materials can be ignited when the oven and cooktop are in use.
- Use extreme caution when moving or disposing of hot grease.

- Wear proper apparel. Do not wear loose-fitting or hanging garments, which may ignite if they contact hot surfaces, and cause severe burns.
- Do not use the oven for drying clothes. Only use the oven for its intended purpose.
- If cabinet storage is provided directly above the cooking surface, only use it to store items that are not frequently used and can be safely stored in an area subjected to heat. Temperatures may be unsafe for volatile items such as flammable liquids, cleaners or aerosol sprays.
- Do not use water on grease fires. Should an oven fire occur, leave the oven door closed and turn the oven off. If the fire continues, throw baking soda on the fire or use a fire extinguisher. Do not put water or flour on the fire. Flour may be explosive and water can spread a grease fire and cause personal injury.

CAUTION

⚠ CAUTION

- To reduce the risk of minor injury to persons, malfunction, or damage to the product or property when using this product, follow basic precautions, including the following:

Operation

- Always heat fat slowly, and watch as it heats.
- If frying combinations of oils and fats, stir them together before heating.
- Use a deep fat thermometer, if possible, to prevent overheating fat beyond the smoking point.
- Use the least possible amount of fat for effective shallow or deep-fat frying. Filling the pan with too much fat can cause spillovers when food is added.
- Accessible parts may become hot when the broiler is in use.
- Do not place food or cookware on the bottom of the oven cavity. Doing so will cause permanent damage to the oven bottom finish.
- When using cooking or roasting bags in the oven, follow the manufacturer’s directions.
- To protect against food-borne illnesses, cook meat and poultry thoroughly. The USDA has indicated the following as safe minimum internal temperatures for consumption:
  - Ground beef: 160 °F
  - Poultry: 165 °F
  - Beef, veal, pork, or lamb: 145 °F
  - Fish/seafood: 145 °F

Maintenance

- Do not store items of interest to children in cabinets above a range or on the back guard of a range. Children climbing on the range to reach items could be seriously injured.
- Do not repair or replace any part of the appliance unless specifically recommended in the manual. All other servicing should be performed by a qualified technician.
- Do not use harsh etching, abrasive cleaners or sharp metal scrapers to clean the oven door glass because they can scratch the surface. Scratches may cause the glass to shatter.
- Make sure oven lights are cool before cleaning.
- Do not clean the door gasket. The door gasket is essential for a good seal. Care should be taken not to rub, damage, or move the gasket.

SAVE THESE INSTRUCTIONS

PRODUCT OVERVIEW

Product Features

Exterior and Interior

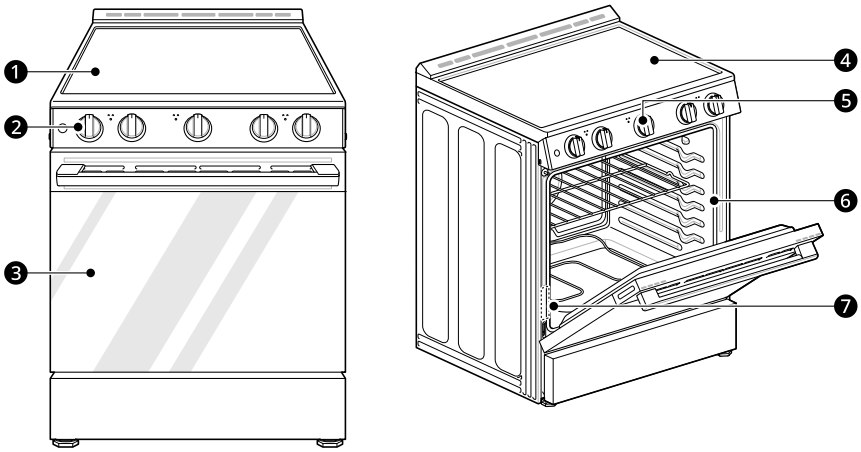

❶ Cooktop

❷ Cooktop Controller

❸ Oven Door

❹ Glass-ceramic Cooktop

❺ Oven Mode Knob

❻ Gasket

❼ Model & Serial Number Plate

NOTE

- This model does not have a storage drawer.

Product Specifications

The appearance and specifications listed in this manual may vary due to constant product improvements.

Oven Range Models	LSEL6330*E
Description	Electric Slide In Oven Range
Electrical requirements	11.4 kW 120/240 VAC or 8.6 kW 120/208 VAC
Exterior Dimensions	29 7/8" (W) x 37 1/4"(H) x 29 7/32" (D) (D with door closed and including door handle) 75.9 cm (W) x 94.6 cm (H) x 74.2 cm (D) (D with door closed and including door handle)
Height to cooking surface	36" (91.4 cm)
Total capacity	6.3 cu. ft.

Accessories

Included Accessories

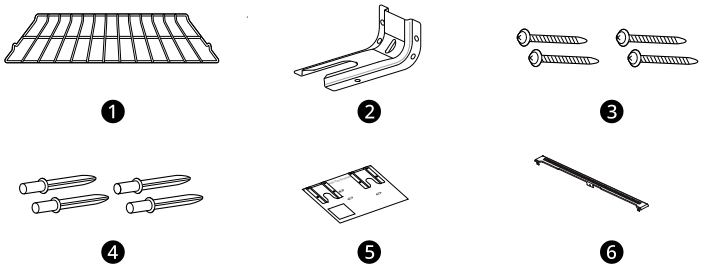

❶ Standard Rack (2 ea)

❷ Anti-tip Bracket (1 ea)

❸ Screws (4 ea)

❹ Anchors (4 ea)

❺ Template (1 ea)

❻ Rear Filler (1 ea)

Optional Accessories (sold separately)

❶ Grid

❷ Broiler Pan

NOTE

- Optional accessories are not included with the unit. These accessories are available for purchase on the www.lg.com web page.
- Contact LG Customer Service at 1-800-243-0000 (1-888-542-2623 in Canada) if any accessories are missing.
- For your safety and for extended product life, only use authorized components.
- The manufacturer is not responsible for product malfunction or accidents caused by the use of separately purchased, unauthorized components or parts.
- The images in this guide may be different from the actual components and accessories, which are subject to change by the manufacturer without prior notice for product improvement purposes.

INSTALLATION

Before Installing

Installation Overview

Please read the following installation instructions first after purchasing this product or transporting it to another location.

The images in this guide may be different from the actual components and accessories, which are subject to change by the manufacturer without prior notice for product improvement purposes.

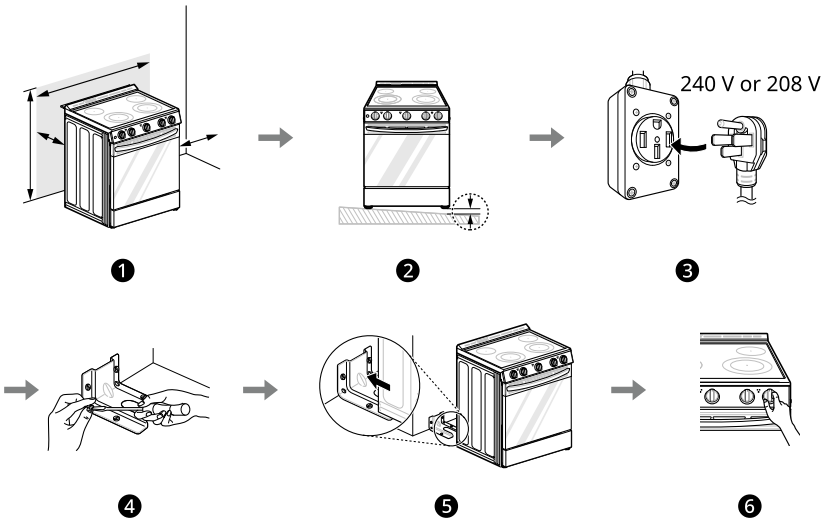

❶	Check and choose the proper location	❹	Install anti-tip device
❷	Level the range	❺	Engage the anti-tip device
❸	Plug in the power cord	❻	Test run

Tools Needed

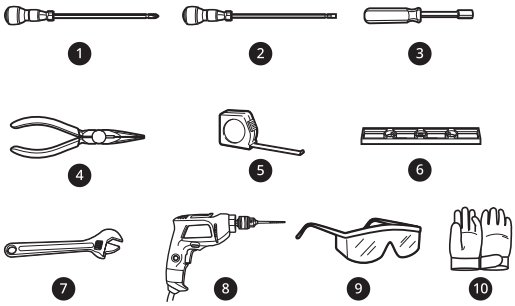

❶ Phillips Screwdriver

❷ Flat-blade Screwdriver

❸ 1/4" Nut Driver

❹ Pliers

❺ Tape Measure

❻ Level

❼ Adjustable Wrench

❽ Drill

❾ Safety Glasses

❿ Gloves

Parts

Parts Provided

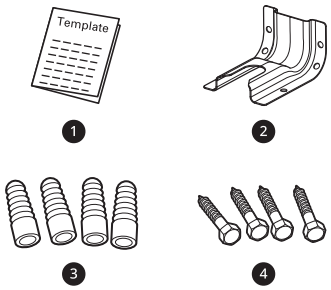

❶ Template (1)

❷ Anti-tip bracket kit (1)

❸ Anchor sleeves (4)

❹ Lag bolts (4)

NOTE

- Observe all governing codes and ordinances.
- Have the installer show you the location of the circuit breaker or fuse. Mark it for easy reference.
- As when using any appliance generating heat, there are certain safety precautions you should follow.
- Be sure your range is installed and grounded properly by a qualified installer or service technician.

Unpacking and Moving the Range

⚠ WARNING

- You should use two or more people to move and install the range. (Excessive Weight Hazard) Failure to do so can result in back or other injury.
- Do not use the door handles or knobs to push or pull the range during installation or when moving the range out for cleaning or service. Doing so can result in serious damage to the range.

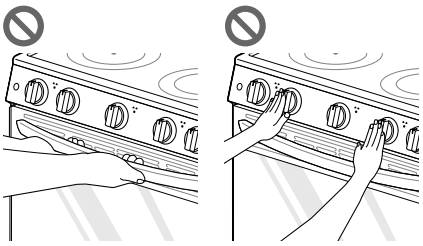

- Do not push or pull the range by grabbing the open oven door or cooktop only. Doing so can result in serious damage to the range.

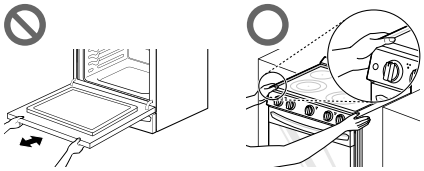

- Do not lift the range using the cooktop or door handle. Doing so can cause damage and improper operation of the range.

- To reduce the risk of burns, do not move this appliance while it is hot.

NOTE

- The image may differ from the actual model.
- Your range is heavy and can be installed on soft floor coverings such as cushioned vinyl or carpeting. Use care when moving the range on this type of flooring. Use a belt when moving the range to prevent damaging the floor. Or slide the range onto cardboard or plywood to avoid damaging the floor covering.

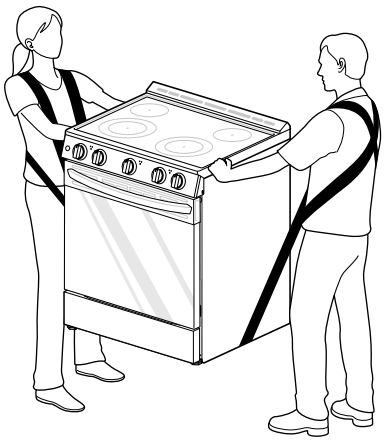

NOTE

- Remove packing material, tape and any temporary labels from your range before using. Do not remove any warning-type labels, the model and serial number label, or the Tech Sheet that is located on the back of the range.
- To remove any remaining tape or glue, rub the area briskly with your thumb. Tape or glue residue can also be easily removed by rubbing a small amount of liquid dish soap over the adhesive with your fingers. Wipe with warm water and dry.
- Do not use sharp instruments, rubbing alcohol, flammable fluids, or abrasive cleaners to remove tape or glue. These products can damage the surface of your range.

Choosing the Proper Location

Dimensions and Clearances

Dimensions

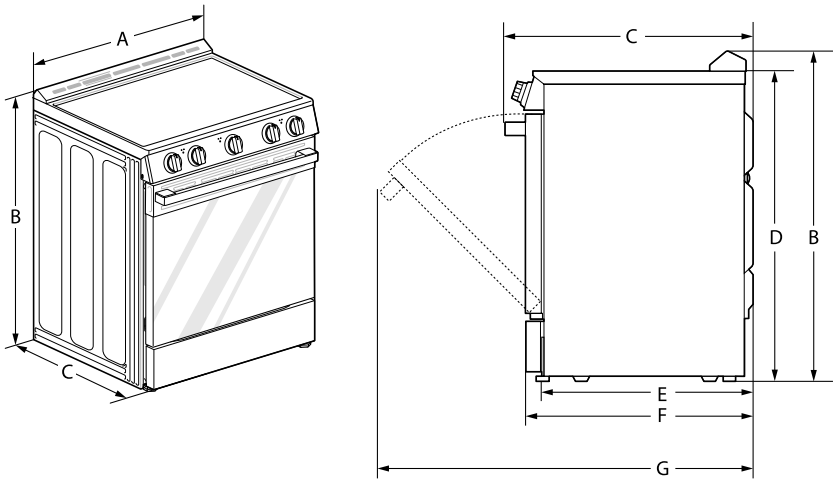

-	Dimensions	LSEL6330*E
A	Width	29 7/8" (759 mm)
B	Height	37 1/4" (946 mm)
C	Depth (Includes Door Handle)	29 7/32" (742 mm)
D	Height (Excludes Vent Trim)	36" (914 mm)
E	Depth (Includes only the product body that is loaded into the cabinet. Excludes door, drawer, and handles)	24 25/32" (628.4 mm)
F	Depth (Excludes Door Handle)	26 27/32" (682 mm)
G	Depth when door is fully opened	48 5/8" (1235.9 mm)

Clearances

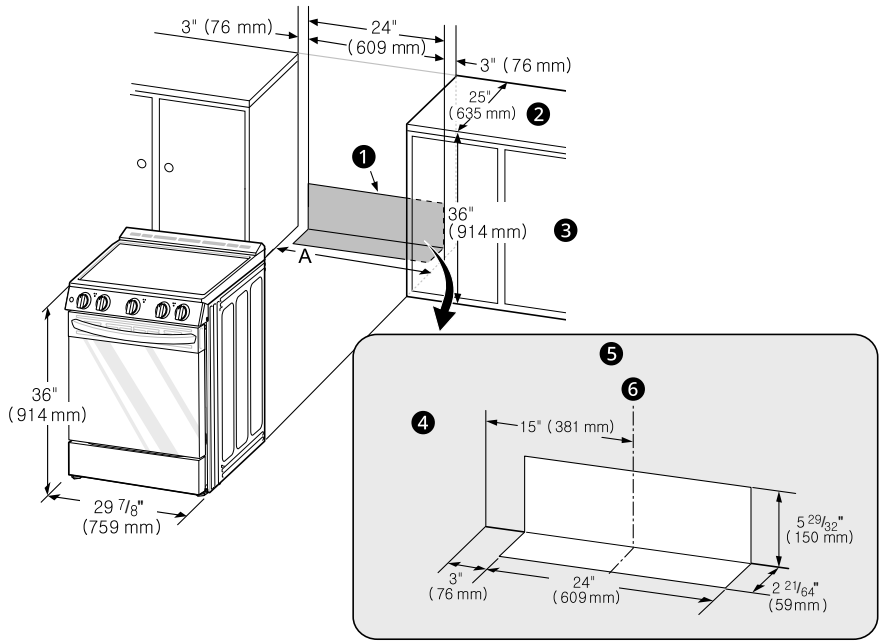

❶ Acceptable electrical outlet area

❷ Normal counter top depth

❸ Counter top height

❹ Cabinet

❺ Wall

❻ Center

A (Cabinet opening)

= 30" (762 mm) ~ 31" (787 mm)

Minimum Dimensions

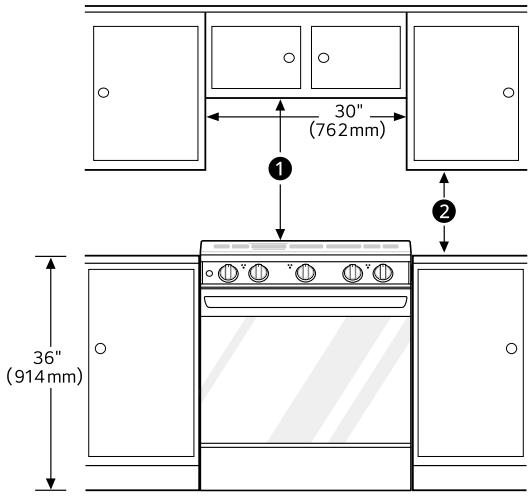

❶ 30" (762 mm) minimum clearance between the top of the cooking surface and the bottom of an unprotected wood or metal cabinet; or 24" (609 mm) minimum when bottom of wood or metal cabinet is protected by not less than 1/4" (6.4 mm) flame retardant millboard covered with not less than no. 28 MSG sheet steel, 0.015" (0.381 mm) stainless steel, 0.024" (0.610 mm) aluminum or 0.020" (0.508 mm) copper.

❷ 15" (381 mm) minimum between countertop and adjacent cabinet bottom.

⚠ WARNING

- Important – Save for the use of the local electrical inspector.
- For installation, a free-standing range is not to be installed closer than 15/32" (12 mm) from any adjacent surface.

Electricity

The range should always be plugged into its own individual properly grounded electrical outlet.

- This prevents overloading house wiring circuits which could cause a fire hazard from overheated wires.
- It is recommended that a separate circuit serving only this appliance be provided.

Electrical Connection Requirements

The range must be installed in accordance with Local and Canadian Electrical Codes (latest edition). See rating plate for total connected Amp rating. This model was shipped direct from the factory with the electrical supply cord attached. There are no range connections necessary.

NOTE

- Only a range cord rated at 40 amps with 120/240 minimum volt range is required. If a 50 amp range cord is used, it should be marked for use with 1 $^{3}/_{8}$" diameter connection openings.

Flooring

⚠ CAUTION

- Use an insulated pad or 1/4 in. (0.64 cm) plywood under the range if installing the range over carpeting.

Ambient Temperature

⚠ CAUTION

- Make sure wall coverings, countertops and cabinets around the range can withstand the heat (up to 194 °F) generated by the range. Discoloration, delamination or melting may occur. This range has been designed to comply with the maximum allowable wood cabinet temperature of 194 °F.
- Before installing the range in an area covered with linoleum or other synthetic floor covering, make sure the floor covering can withstand temperatures of at least 200 °F (93 °C).

Leveling

Leveling the Range

Level the range by adjusting the leveling legs with a wrench. Extending the legs slightly may also

make it easier to insert the rear leg into the anti-tip bracket.

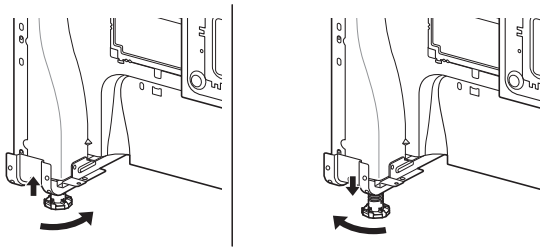

NOTE

- The front foot of the product is inclined about 5 degrees.

Checking Adjustments

1 Place a level diagonally on the oven rack, and check each direction for level.

- First check direction ❶. Then check direction ❷.

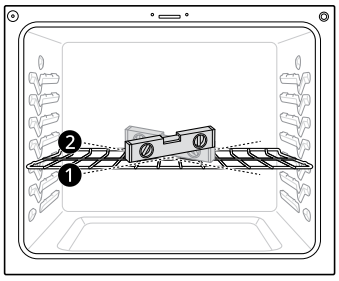

2 If the level doesn't show that the rack is level, adjust the leveling legs with a wrench.

Optional Rear Filler

Installing the Rear Filler

If the counter does not bridge the opening at the rear wall, the rear filler kit that is provided with the slide-in range will be needed.

NOTE

- If the countertop depth is greater than 25 3/8" there will be a gap between the filler kit and the back wall.
- If the countertop depth is less than 24 3/4", the control panel will not sit flush with the countertop.

1 Using a screwdriver, remove the 2 screws holding the rear top plate in place.

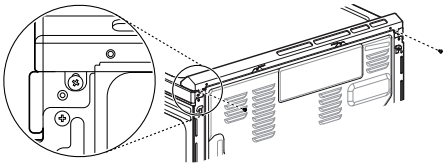

2 Attach the rear top plate and filler assembly as shown, using the 2 screws removed in step 1.

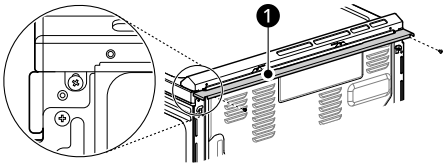

❶ Rear filler

Anti-tip Device

Installing the Anti-tip Device

Tip Hazard

⚠ WARNING

- A child or adult can tip the range and be killed.

- Install the anti-tip device to the structure and/or the range. Verify the anti-tip device has been properly installed and engaged by following the guide on the anti-tip bracket template.
- Engage the range to the anti-tip device by following the guide on the anti-tip bracket template. Ensure the anti-tip device is re-engaged when the range is moved by following the guide on the anti-tip bracket template.
- Re-engage the anti-tip device if the range is moved. Do not operate the range without the anti-tip device in place and engaged.
- See installation instructions for details.
- Failure to follow these instructions can result in death or serious burns to children or adults.
- Range must be secured with an approved anti-tip device.

WARNING

- The range could be tipped by standing, sitting or leaning on an open door if the range or anti-tip device is not properly installed.
- The use of this device does not preclude tipping of the range when not properly installed.

- After installing the anti-tip device, verify that it is in place by carefully attempting to tilt the range forward.
- This range has been designed to meet all recognized industry tip standards for all normal conditions.
- The installation of the anti-tip device must meet all local codes for securing the appliance.

Using the Anti-tip Bracket Template

- The anti-tip bracket is packaged with an installation template. The instructions include necessary information to complete the installation. Read and follow the range installation instruction sheet.
- Screws ❸ must enter wood or concrete.

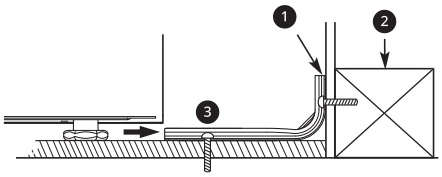

❶ Anti-tip Bracket

❷ Wall Plate

Engaging the Anti-tip Device

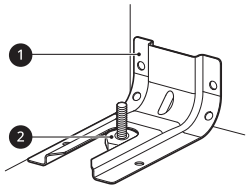

❶ Anti-tip Bracket

❷ Leveling Leg

1 Slide the range against the wall, making sure the back leg slides into and engages the anti-tip bracket.

2 Check for proper installation by grasping the front edge of the cooktop and carefully attempting to tilt the range forward.

Test Run

Test the Range Before Use

Check if the range is properly installed and run a test cycle.

1 Before using the cooktop for the first time, clean it with a ceramic cooktop cleaner. This helps protect the top and makes cleanup easier.

2 Turn the oven mode knob to the **OFF** position to start the test.

3 Turn each knob to the **Hi** position to check that the surface heating elements are working properly. The elements should glow red and radiate heat, and they should cycle on and off periodically even when the knob is in the **Hi** position. This cycling prevents the glass-ceramic from being cracked by thermal shock.

4 Turn the mode knob to **Broil** and run for at least 15 minutes, then turn to Bake at 450 °F and run for at least 1 hour. This will help remove any oil which might cause smoke and odors when first using the oven.

NOTE

- Smoke may come out of the range when it is first used.

OPERATION

Control Panel

Knob Positions

After cleaning the cooktop control knobs, make sure to replace each knob in the correct position. Failure to do so can result in improper operation of the burners.

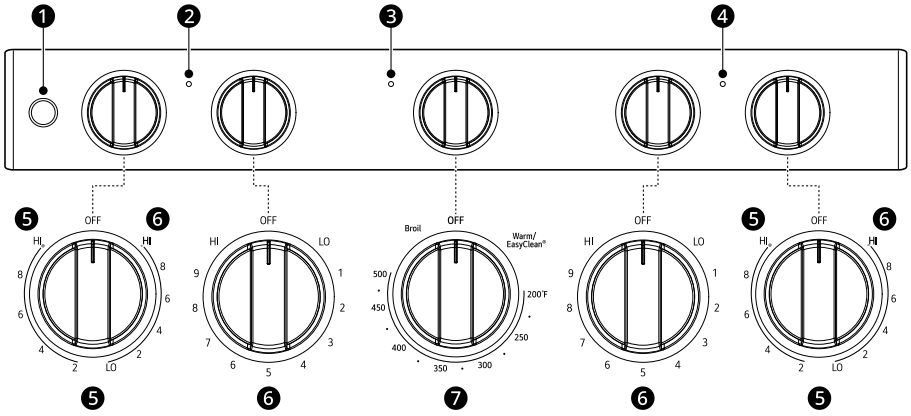

❶ **Light**

❷ **Burner On**

The Burner On indicator light turns on when the knob is turned even if the cooktop element does not operate.

❸ **Oven On**

❹ **Hot Surface Indicator**

The hot surface indicator light glows as long as any surface cooking area is too hot to touch.

It remains on after the element is turned off and until the surface has cooled to approximately 150 ˚F.

❺ **Dual** (Mark A)

Icon Type1	Icon Type2
● ●	◎

❻ **Single** (Mark C)

Icon Type1	Icon Type2
●	○

❼ **Oven Knob**

NOTE

- When reassembling the knobs, refer to the marks for the correct orientation.

Cooktop

Before Using the Cooktop

WARNING

- Do not cook on a broken cooktop. If the cooktop is broken, cleaning solutions and spillovers may penetrate the broken cooktop and create a risk of electric shock. Contact a qualified technician immediately.
- Do not place or store items that can melt or catch fire on the glass cooktop, even when it is not being used.
- Never leave hot cookware or utensils near the control panel, as the heat could damage the control panel.
- Turn cookware handles inward so they don't extend over adjacent surface units. This reduces the risk of burns, ignition of flammable materials, and spillage due to unintentional contact with the cookware.
- Some cleaners can produce dangerous fumes if applied to a hot surface.
- Always place the pan in the center of the surface unit you are cooking on. Never leave surface units unattended at high heat settings. Proper contact of cookware to burner also will improve efficiency. Boilovers cause smoking and greasy spills that may catch on fire.
- Clean cooktop with caution. Do not use sponges or a cloth to wipe spills on a hot cooking area. Use a proper metal scraper. If a wet sponge or cloth is used to wipe spills on a hot cooking area, it can cause steam burns. Some cleaners can produce noxious fumes if applied to a hot surface.

CAUTION

- Do not use the glass cooktop surface as a cutting board.
- Choose proper burner size. For smaller pots and pans, use the smaller heating elements. For larger pots and pans, use the larger heating elements. Select pans that have flat bottoms large enough to cover the heating elements. Using undersized pans exposes a portion of the heating element to direct contact and may result in a burn or fire hazard.
- Glazed cookware. Only certain types of glass, glass-ceramic, ceramic, earthenware, or other glazed cookware are suitable for range-top service without breaking due to the sudden change in temperature.
- Never cook directly on the glass. Always use cookware.
- Always turn the surface units off before removing cookware.
- Immediately clean spills on the cooking area to prevent a tough cleaning chore later.
- Do not turn surface units on before placing cookware.
- Do not store heavy items above the cooktop surface that could fall and damage it.
- Do not place aluminum foil or plastic items such as salt and pepper shakers, spoon holders, or plastic wrappings or any other material on the range when it is in use.
- Do not use a steel-wool pad or scrub pad or abrasive cleaning pads. They can scratch the surface.

Cooking Areas

The cooking areas on your range are identified by permanent circles on the glass cooktop surface. For the most efficient cooking, fit the pan size to the element size.

Pans should not extend more than 1/2 to 1-inch beyond the cooking area.

When a control is turned on, a glow can be seen through the glass cooktop surface.

NOTE

- It is normal for the surface elements to cycle on and off during cooking, even on higher settings. This will happen more frequently if cooking on a lower temperature setting.

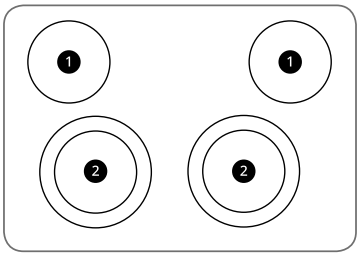

❶ SINGLE

❷ DUAL

NOTE

- It is normal to see a very faint red ring around the outer edge of a dual or triple element when using it as a single element at a high heat setting. This is only a reflection from the bright

glow of the center element and is not a malfunction.

Using the Cooktop Elements

CAUTION

- Only use cookware and dishes that are safe for oven and cooktop use.
- Always use oven mitts when removing food from the cooktop and oven.
- Do not place sealed containers on the cooktop.
- Do not use plastic wrap to cover food while on the cooktop. Plastic may melt onto the surface and be very difficult to remove.
- Never leave food on the cooktop unattended. Spillovers can cause smoke. Greasy spillovers may catch on fire.
- Never leave any items on the cooktop. The hot air from the vent may ignite flammable items and will increase pressure in closed containers, which may cause them to burst.
- The surface element may appear to have cooled after it has been turned off. The element may still be hot and touching the element before it has cooled sufficiently can cause burns.
- Match the size of the cooktop element to the size of the cookware in use. Using a large element for a small pan wastes heating energy, and the exposed surface of the element is a burn or fire hazard.

NOTE

- Hot Surface Indicator
  - The hot surface indicator light glows as long as any surface cooking area is too hot to touch.
  - It remains on after the element is turned off and until the surface has cooled to approximately 150 ˚F.

Turning on a Single Element

1 Press in the side button on the knob ①.

2 Push the Single element knob in ②.

3 Turn the knob in either direction to the desired setting ③.

- The control knob clicks when it is positioned at both **OFF** and **HI**.

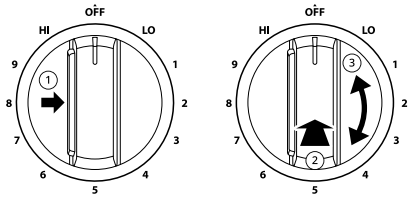

Heating Element	
OFF	ON

NOTE

- **HI** is the highest temperature available.
- **LO** is the lowest temperature available.

Turning on a Dual Element

Use the dual element as a dual or single element.

1 Press the side button on the knob ①.

2 Push in the appropriate knob ②.

3 Turn the knob to use it as a single element or a dual element ③.

- To use it as a single element, turn the knob counterclockwise.
- To use it as a dual element, turn the knob clockwise.

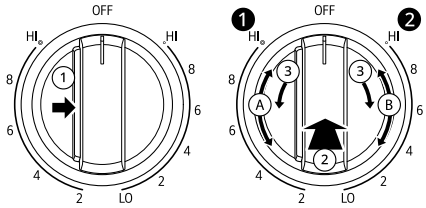

	Icon Type 1	Icon Type 2
❶ Dual	● ●	◎
❷ Single	●	○

Heating with inner (smaller) element only	Heating with both elements together
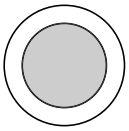	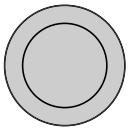
A	B

Using the Oven Knob

1 Press in the side button on the knob ①.

2 Push the Single element knob in ②.

3 Turn the knob either direction to the desired mode setting ③.

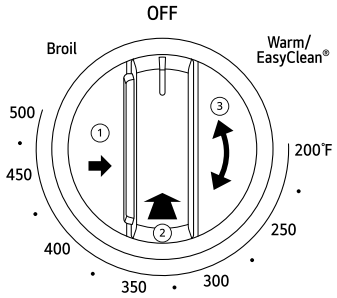

Using the Knob Lock

You can adjust the knob lock on each cooktop knob so you don't have to press the button in to use the knob. Remove and adjust one knob at a time.

1 Make sure the knob is in the **OFF** position and pull it straight off the stem.

2 On the back of the knob ring, rotate the black tab to the **2 Step** or **3 Step** position.

- If you slide the tab to the **2 Step** ❶ position, the knob can be used without pressing in the button.
- If you slide the tab to the **3 Step** ❷ position, you must press in the button to use the knob.

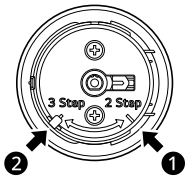

3 Once the knob lock is adjusted as desired, reinstall the knob. To reinstall, hold the knob with the **OFF** label at the top and slide the knob directly onto the stem.

NOTE

- The black tab must be aligned with the **2 Step** or **3 Step** mark to ensure proper operation of the knob and button.

The Recommended Surface Cooking Setting

Setting	Recommended Use
8.5-Hi	• Bring liquid to a boil • Start cooking
5.5-8.0	• Hold a rapid boil, frying, deep fat fry • Quickly brown or sear food
3.5-5.0	• Maintain a slow boil • Fry or saute foods • Cook soups, sauces and gravies
2.2-3.0	• Stew or steam food • Simmer
Lo-2.0	• Keep food warm • Melt chocolate or butter • Simmer

Using the Proper Cookware

The size and type of cookware will influence the settings needed for the best cooking results. Be sure to follow the recommendations for using proper cookware.

NOTE

- Match the size of the cookware to the amount of food being cooked to save energy when heating. Heating 1/2 quart of water requires more energy in a 3-quart pot than in a 1-quart pot.

Cookware should have flat bottoms that make good contact with the entire surface heating element. Check for flatness by placing a ruler across the bottom of the cookware. The ruler should touch the cookware across the entire bottom, with no gaps.

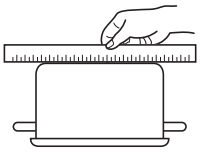

Cookware Recommendations

- Flat bottom and straight sides
- Heavy-gauge pans
- Pan sizes that match the amount of food to be prepared and the size of the surface element
- Weight of handle does not tilt pan. Pan is well balanced
- Tight-fitting lids
- Flat bottom woks

Cookware should not

- have a curved or warped bottom.

- be smaller or larger than the surface burner.

- have a heavy handle that tilts the pan.

- be a wok with a ring stand.

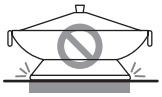

- have loose or broken handles.
- have loose-fitting lids.

NOTE

- Do not use pans less than 7 inches in diameter on the front elements.
- Do not use foil or foil-type containers. Foil may melt onto the glass. Do not use the cooktop if metal has melted on it. Call an authorized LG Service Center.

Choosing Cookware

The cookware material determines how evenly and quickly heat is transferred from the surface element to the pan bottom. The most popular materials available are:

- **Aluminum** - Excellent heat conductor. Some types of food will cause it to darken (anodized aluminum cookware resists staining and pitting). If aluminum pans slide across the ceramic cooktop, they may leave metal marks which will resemble scratches. Remove these marks immediately.
- **Copper** - Excellent heat conductor but discolors easily. May leave metal marks on glass-ceramic (see Aluminum above).
- **Stainless steel** - Slow heat conductor with uneven cooking results. Is durable, easy to clean and resists staining.
- **Cast iron** - A poor heat conductor but retains heat very well. Cooks evenly once cooking temperature is reached. Not recommended for use on ceramic cooktops.
- **Porcelain-enamel on metal** - Heating characteristics will vary depending on base material. Porcelain-enamel coating must be smooth to avoid scratching ceramic cooktops.
- **Glass** - Slow heat conductor. Not recommended for ceramic cooktop surfaces because it may scratch the glass.

Home Canning Tips

Be sure that the canner is centered over the surface element and is flat on the bottom.

- The base must not be more than 1 inch larger than the element. Use of water bath canners with rippled bottoms may extend the time

required to bring the water to a boil and may damage the cooktop.

- Some canners are designed with smaller bases for use on smooth surfaces.
- Use the high heat setting only until the water comes to a boil or pressure is reached in the canner.
- Reduce to the lowest heat setting that maintains the boil, or pressure. If the heat is not turned down, the cooktop may be damaged.

Oven

Before Using the Oven

NOTE

- Because the oven temperature cycles, an oven thermometer placed in the oven cavity may not show the same temperature that is set on the oven.
- The heat turns off if the door is opened during baking. The heat turns back on automatically once the door is closed.
- Avoid opening the oven door more than necessary during use. This helps the oven maintain temperature, prevents unnecessary heat loss, and saves on energy use.

Oven Vent

Areas near the vent may become hot during operation and may cause burns. Do not block the vent opening. Avoid placing plastics near the vent as heat may distort or melt the plastic.

It is normal for steam to be visible when cooking foods with high moisture content.

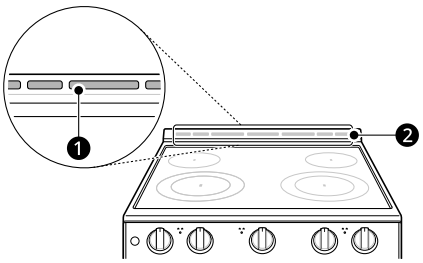

❶ Oven Vent

❷ Vent Trim

⚠ CAUTION

- The edges of the range vent are sharp. Wear gloves when cleaning the range to avoid injury.

Using Oven Racks

The racks have a turned-up back edge that prevents them from being pulled out of the oven cavity.

⚠ CAUTION

- Replace oven racks before turning the oven on to prevent burns.
- Do not cover the racks with aluminum foil, or any other material, or place anything on the bottom of the oven. Doing so will result in poor baking and may damage the oven bottom.
- Only arrange oven racks when the oven is cool.
- Do not place objects heavier than 33 lb (15 kg) on the racks. Do not place heavy objects on the corners of the racks. Doing so can damage the racks.

Removing Racks

1. Pull the rack straight out until it stops.
2. Lift up the front of the rack and pull it out.

Replacing Racks

1. Place the end of the rack on the support.
2. Tilt the front end up and push the rack in.

Bake

Bake is used to prepare foods such as pastries, breads and casseroles.

The oven can be programmed to bake at any temperature from 200 °F (93 °C) to 500 °F (260 °C).

NOTE

- If using a temperature lower than 400 ℉ (204 ℃), preheat the oven for 15 minutes for baking.

- If using a temperature higher than 400 ℉ (204 ℃), preheat the oven for 20 minutes for baking.

1 Turn the oven mode knob to select a temperature from 200 °F to 500 °F.

2 When cooking is complete, turn the oven mode knob to the **OFF** position.

Baking Tips

- Baking time and temperature will vary depending on the characteristics, size, and shape of the baking pan used.
- Check for food doneness at the minimum recipe time.
- Use metal bakeware (with or without a nonstick finish), heatproof glass-ceramic, ceramic or other bakeware recommended for oven use.
- Dark metal pans or nonstick coatings will cook food faster with more browning. Insulated bakeware will slightly lengthen the cooking time for most foods.
- The oven bottom has a porcelain-enamel finish. To make cleaning easier, protect the oven bottom from excessive spillovers by placing a cookie sheet on the rack below the rack you are cooking on. This is particularly important when baking a fruit pie or other foods with a high acid content. Hot fruit fillings or other foods that are highly acidic may cause pitting and damage to the porcelain-enamel surface and should be wiped up immediately.

Recommended Baking and Roasting Guide

Baking results will be better if baking pans are centered in the oven as much as possible. If cooking on multiple racks, place the oven racks in the positions shown.

Multiple-rack cooking saves time and energy. Whenever possible, cook foods requiring the same cooking temperature together in one oven.

Rack and Pan Placement

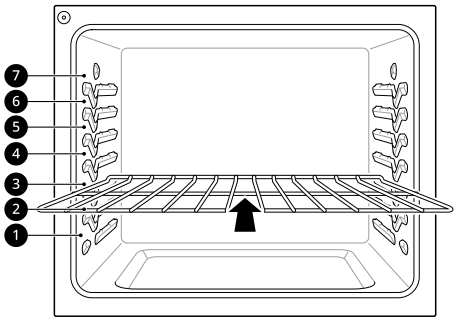

Multiple rack baking	
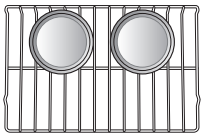	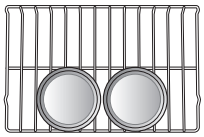
Rack (Position 3)	Rack (Position 5)

Single rack baking
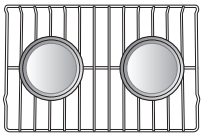
Rack (Position 4)

Baking Rack Guide

Food		Rack position
Cakes	Layer cakes Bundt cakes Angel food cake	4 3 2
Cookies	Sugar cookies Chocolate chips Brownies	4 4 4
Pizza	Fresh Frozen	3 4
Pastry Crust	From scratch Refrigerated	4 4
Breads	Biscuit, canned Biscuit, from scratch Muffins	3 3 5
Desserts	Fruit crisps and cobblers, from scratch Pies, from scratch, 2-crust fruit	4 4

Food		Rack position
Custards	Cheesecake, crème brulée	2
Soufflés	Sweet or savory	2
Casserole	Frozen lasagna	6

Roasting Rack Guide

Food			Rack position
Beef	Rib	Rare Medium Well done	2 2 2
	Boneless rib, top sirloin	Rare Medium Well done	2 2 2
	Tenderloin	Rare Medium	2 2
Pork	Rib		2
	Bone-in, sirloin		2
	Ham, cooked		2
Poultry	Whole chicken		2
	Chicken pieces		2
	Turkey		2

Broil

The Broil function uses intense heat from the upper heating element to cook food. Broiling works best for tender cuts of meat, fish, and thinly cut vegetables.

Some models may feature a hybrid broiler consisting of an inner broiler that utilizes a carbon heating element which provides instantaneous heat, and a traditional outer broiling element. During normal broiler operation, it is normal for either element to cycle off intermittently.

⚠ CAUTION

- Do not use a broiler pan without a grid. Oil can cause a grease fire.
- Do not cover the grid and broiler pan with aluminum foil. Doing so will cause a fire.
- Always use a broiler pan and grid for excess fat and grease drainage. This will help to reduce splatter, smoke, and flare-ups.
- When using your broiler, the temperature inside the oven will be extremely high. Take care to avoid possible burns by:
  - Keeping the door closed when broiling
  - Always wearing oven mitts when inserting or removing food items

NOTE

- This range is designed for closed-door broiling. Close the door to set the Broil function. If the door is opened during broiling, the broil heater turns off. The broiler turns back on automatically once the door is closed.

Setting the Oven to Broil

1. Turn the oven mode knob to select **Broil**.
2. Let the oven preheat for approximately 7 minutes before cooking the food if using broil.
3. Turn the oven mode knob to the **OFF** position to cancel at any time or when cooking is complete.

Tips for Reducing Smoke

Due to the intense heat associated with broiling, it is normal to experience smoke during the cooking process. This smoke is a natural byproduct of searing and should not cause you to worry. If you are experiencing more smoke than you are comfortable with, use the following tips to reduce the amount of smoke in your oven.

- Always use a broiler pan. Do not use saute pans or regular baking sheets for safety reasons.
- The broiler pan should always be thoroughly cleaned and at room temperature at the beginning of cooking.
- Always run your cooktop ventilation system or vent hood during broiling.
- Keep the interior of your oven as clean as possible. Leftover debris from prior meals can burn or catch fire.
- Avoid fatty marinades and sugary glazes. Both of these will increase the amount of smoke you experience. If you would like to use a glaze, apply it at the very end of cooking.
- As a rule, fattier cuts of meat and fish will produce more smoke than leaner items.

- Adhere to the guidelines in the **Recommended Broiling Guide** section whenever possible.

Recommended Broiling Guide

The size, weight, thickness, starting temperature, and your preference of doneness will affect broiling times.

This guide is based on meats at refrigerator temperature. For best results when broiling, use a pan designed for broiling.

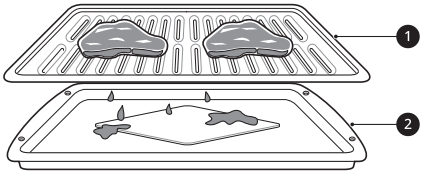

❶ Grid (sold separately)

❷ Broiler pan (sold separately)

Food	Quantity and/or Thickness		Rack Position	First Side (min.)	Second Side (min.)	Comments
Hamburgers	4 patties $^1/_2$ to $^3/_4$" thick (13 to 19 mm thick)		7	4-6	2-4	Space evenly. Up to 8 patties may be broiled at once.
Beef Steaks	1" thick (25 mm thick) 1 to 1$^1/_2$ lbs. (0.5 to 0.7 kg)	Rare	7	3-5	2-4	Steaks less than 1" thick cook through before browning. Pan frying is recommended. Slash fat.
		Medium	7	4-6	2-4	
		Well done	7	5-7	3-5	
	1$^1/_2$" thick (38 mm thick) 2 to 2 $^1/_2$ lbs. (0.9 to 1.1 kg)	Rare	5	7-9	4-6	
		Medium	5	9-11	6-8	
		Well done	5	11-13	8-10	
Toast	1 to 9 pieces		7	0.5-1	0.5	Evenly space the toast over the tray.
Chicken	1 whole, 2 to 2$^1/_2$ lbs. (0.9 to 1.1 kg), split lengthwise		5	10-12	8-10	Use non-stick pan spray to prevent sticking. Broil skin-side-down first. Let rest for 10 minutes before cutting.
	2 Breasts		5	8-10	5-7	Use non-stick pan spray to prevent sticking.
Lobster Tails	2–4 10 to 12 oz. (0.28 to 0.34 kg) each		5	9-12	Do not turn over	Cut through back of shell. Spread open. Brush with melted butter before broiling and halfway through broiling time.

Food	Quantity and/or Thickness		Rack Position	First Side (min.)	Second Side (min.)	Comments
Fish Fillets	$^1/_4$ to $^1/_2$" thick (6 to 13 mm thick)		6	2-4	2-4	Handle and turn very carefully. Brush with lemon butter before and during cooking, if desired.
Ham Slices (precooked)	$^1/_2$" thick (13 mm thick)		5	2-4	2-4	Increase time 5 to 10 minutes per side for 1 1/2" thick or home-cured ham.
Pork Chops Well done	2 ($^1/_2$" thick (13 mm thick))		6	3-6	4-7	Brush oil over both sides of the chops to aide with exterior browning.
	2 about 1lb. (0.5 kg) 1" thick (25 mm thick)		5	5-8	5-8	
Lamb Chops	2 about 10 to 12 oz. (0.28 to 0.34 kg) 1" thick (25 mm thick)	Medium	6	3-5	2-5	Brush oil over both sides of the chops to aide with exterior browning.
		Well done	6	5-7	4-7	
	2 about 1lb. (0.5 kg) 1 $^1/_2$" thick (38 mm thick)	Medium	6	7-9	7-9	
		Well done	6	9-11	7-9	
Salmon Steaks	2 1" thick (25 mm thick)		5	8-10	3-5	Grease pan. Brush steaks with melted butter.
	4 about 1 lb. (0.5 kg) 1" thick (25 mm thick)		5	9-11	4-6	

- This guide is only for reference. Adjust cook time according to your preference.

NOTE

- The USDA advises that consuming raw or undercooked fish, meat, or poultry can increase your risk of food-borne illness.
- The USDA has indicated the following as safe minimum internal temperatures for consumption:
  - Ground beef: 160 °F (71.1 °C)
  - Poultry: 165 °F (73.9 °C)
  - Beef, veal, pork, or lamb: 145 °F (62.8 °C)
  - Fish / Seafood: 145 °F (62.8 °C)

Tips for Broiling

- **Beef**
  - Steaks and chops should always be allowed to rest for five minutes before being cut into and eaten. This allows the heat to distribute evenly through the food and creates a more tender and juicy result.
  - Pieces of meat that are thicker than two inches should be removed from the refrigerator 30 minutes prior to cooking. This will help them cook more quickly and evenly, and will produce less smoke when broiling. Cooking times will likely be shorter than the times indicated in the Broiling Chart.
  - For bone-in steaks or chops that have been frenched (all meat removed from around the bone), wrap the exposed sections of bone in foil to reduce burning.

- **Seafood**
  - When broiling skin-on fish, always use the Lo broil setting and always broil the skin side last.
  - Seafood is best consumed immediately after cooking. Allowing seafood to rest after cooking can cause the food to dry out.
  - It is a good idea to rub a thin coating of oil on the surface of the broiling pan before cooking to reduce sticking, especially with fish and seafood. You can also use a light coating of non-stick pan spray.
- **Vegetables**
  - Toss your vegetables lightly in oil before cooking to improve browning.

Warm

This function maintains an oven temperature of 170 °F. The Warm function may be used without any other cooking operations.

Setting the Warm Function

1 Turn the oven mode knob to select **Warm**.

NOTE

- The Warm function is intended to keep food warm. Do not use it to cool food down.

MAINTENANCE

Cleaning

CAUTION

- Do not clean this appliance with bleach.
- To prevent burns, wait until the cooktop has cooled down before touching any of its parts.
- Always wear gloves when cleaning the cooktop.

Interior

Do not use oven cleaners to clean the oven cavity. Use the product's **EasyClean** function regularly to clean light soil. For stubborn soil, use the **Self Clean** function (on some models) or clean manually using the following tips.

- A plastic spatula can be used as a scraper to scrape off any chunks or debris before and during oven cleaning.
- Using the rough side of a non-scratch scouring pad may help to take off burnt-on stains better than a soft sponge or towel.
- Certain non-scratch scrubbing sponges, such as those made of melamine foam, available at local stores, can also help improve cleaning.

CAUTION

- Do not use oven cleaners, harsh chemical cleaners, bleach, vinegar, steel scouring pads, or abrasive pads or cleansers to clean the oven, as they can permanently damage the oven surface.
- Do not clean the gasket.

Exterior

Control Panel

To prevent activating the control panel during cleaning, disconnect power to the appliance. Clean up splatters with a damp cloth using a glass cleaner. Remove heavier soil with warm, soapy water. Do not use abrasives of any kind.

Front Manifold Panel and Knobs

It is best to clean the manifold panel after each use of the range. For cleaning, use a damp cloth and mild soapy water or a 50/50 solution of vinegar and water. Rinse with clean water and polish dry with a soft cloth.

CAUTION

- Do not use abrasive cleansers, strong liquid cleaners, plastic scouring pads or oven cleaners on the manifold panel. Doing so will damage the finish.
- Do not try to bend the knobs by pulling them up or down, and do not hang a towel or other objects on them. This can damage the gas valve shaft.
- The control knobs may be removed for easy cleaning.
- To clean the knobs, make sure that they are in the **OFF** position and pull them straight off the stems.
- To replace the knobs, make sure the knob has the **OFF** position centered at the top, and slide the knob directly onto the stem.

NOTE

- To prevent scratching, do not use abrasive cleaners on any of these materials.

Painted and Decorative Trim

For general cleaning, use a cloth with hot soapy water. For more difficult soils and built-up grease, apply a liquid detergent directly onto the soil. Leave it on for 30 to 60 minutes. Rinse with a damp cloth and dry. Do not use abrasive cleaners.

Stainless Steel Surfaces

To avoid scratches, do not use steel wool pads.

1. Place a small amount of stainless steel appliance cleaner or polish on a damp cloth or paper towel.
2. Clean a small area, rubbing with the grain of the stainless steel if applicable.
3. Dry and buff with a clean, dry paper towel or soft cloth.
4. Repeat as necessary.

NOTE

- To clean the stainless steel surface, use warm sudsy water or a stainless steel cleaner or polish.
- Always wipe in the direction of the metal surface finish.
- Stainless steel appliance cleaner or polish can be purchased online or from most retailers of appliances or home goods.

Oven Door

CAUTION

- Do not use harsh cleaners or harsh abrasive cleaning materials on the outside of the oven door. Doing so can cause damage.

- Use soapy water to thoroughly clean the oven door. Rinse well. Do not immerse the door in water.
- You may use a glass cleaner on the outside glass of the oven door. Do not spray water or glass cleaner on the door vents.
- Do not use oven cleaners, cleaning powders, or harsh abrasive cleaning materials on the outside of the oven door.
- Do not clean the oven door gasket. The oven door gasket is made of a woven material that is essential for a good seal. Care should be taken not to rub, damage, or remove this gasket.

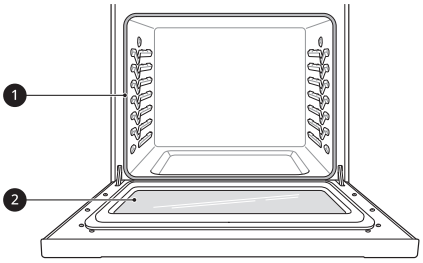

❶ Don’t hand clean oven door gasket

❷ Do hand clean door

Broiler Pan and Grid

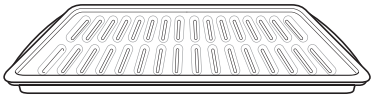

- Do not store a soiled broiler pan or grid anywhere in the range.
- Remove the grid from the pan. Carefully pour out the grease from the pan into a proper container.
- Wash and rinse the broiler pan and grid in hot water with a soap-filled or plastic scouring pad.
- If food has burned on, sprinkle the grid with cleaner while hot and cover with wet paper towels or a dishcloth. Soaking the pan will remove burned-on foods.
- Both the broiler pan and grid may be cleaned with a commercial oven cleaner or in the dishwasher.

Oven Racks

Remove the oven racks before operating the EasyClean function.

1 Clean with a mild, abrasive cleaner.

- Food spilled into the tracks could cause the racks to become stuck.

2 Rinse with clean water and dry.

Vent Louvers

- The appearance of the range may differ from model to model.

Use a vacuum cleaner with a brush or crevice attachment to clean the vent louvers ❶. Do not remove the panel covering the range.

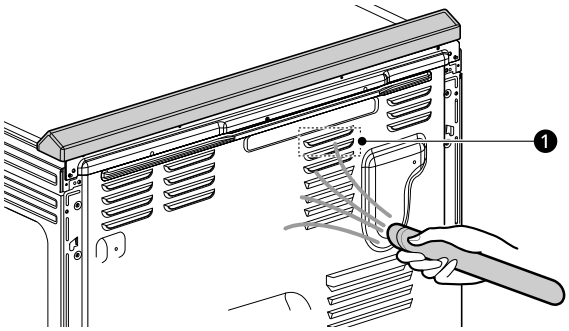

Cooktop Surface

Glass-Ceramic Cooktop

CAUTION

- If any sugar or food containing sugar spills, or plastic or foil melts on the cooktop, remove the material IMMEDIATELY with a metal razor scraper while the cooking surface is still hot to avoid the risk of damage to the glass-ceramic surface. When used correctly, the scraper will not damage the cooktop surface. For your safety, please use an oven mitt or pot holder while scraping the hot cooking surface.
- If water or food containing water spills, remove the spill IMMEDIATELY with a dry paper towel.
- Do not use scrub pads or abrasive cleaning pads. They may damage your cooktop surface.
- For your safety, wear an oven mitt or pot holder while using a scraper on the hot cooking surface.

Use ceramic cooktop cleaner on the glass cooktop. Other creams may not be as effective or may scratch, damage or stain the cooktop surface. Wait until the cooktop has cooled completely before applying cleaning cream. Some cleaners can emit dangerous fumes if used on a hot surface.

To maintain and protect the surface of the glass cooktop, follow these steps:

1. Before using the cooktop for the first time, clean it with a ceramic cooktop cleaner. This helps protect the top and makes cleanup easier.

2. Use ceramic cooktop cleaner daily to help keep the cooktop looking new.

3. Shake the cleaning cream well. Apply a few drops of cleaner directly to the cooktop.

4. Use a paper towel to clean the entire cooktop surface.

5. Rinse with clear water and use a dry cloth or paper towel to remove all cleaning residue.

NOTE

- Any damage or failure of the product resulting from the items below may not be covered under the LIMITED WARRANTY.
  - Sugary spillovers (such as preserves, ketchup, tomato sauce, jellies, fudge, candy, syrups, or chocolate) or melted plastics can cause pitting on the surface of your cooktop.
  - If food or water containing calcium (such as baking powder, wine, milk, spinach, or broccoli) is spilled on the cooktop, it can permanently stain or discolor the surface.

Burned-On Residue

1. While the cooktop is still warm, remove any burnt on deposits or spilled food from the glass-ceramic cooking surface with a suitable metal razor scraper. To prevent burns, wear an oven mitt or pot holder while using the metal scraper.

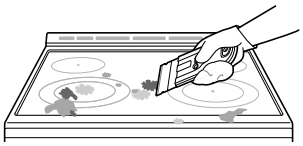

NOTE

- Do not use a dull or nicked blade.
- Hold the scraper at approximately a 30° angle to the cooktop.
- The razor scraper will not damage the markings on the cooking surface.

2. When the cooking surface has completely cooled, apply a few fingertip-sized dabs of a ceramic glass cooktop cleaner in each burner area. Work the cleaning cream over the cooktop surface with a damp paper towel. Leave the cleaner on for 10 minutes before rinsing it off.

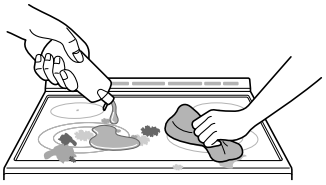

3. Rinse with clean water and wipe the cooktop surface with a clean, dry paper towel.

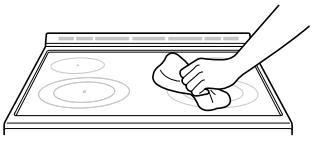

Maintaining the Cooktop

CAUTION

- Do not use chlorine bleach, ammonia, or other cleaners not specifically recommended for use on glass-ceramic cooktops.
- Let your glass-ceramic cooking surface cool off before cleaning.

	Wipe off with a damp towel and mild detergent	Use a metal scraper	Apply cooktop cleaning cream. Rub with a towel.	Rinse with a damp towel, then wipe dry.
Regular (Recommended after each use)				
Occasional (Recommended every week)				
Thorough (Recommended for tough stains or burnt-on food)				

NOTE

- For additional product information, visit our website at www.lg.com

Metal Marks and Scratches

CAUTION

- Cookware with rough or uneven bottoms can mark or scratch the cooktop surface.

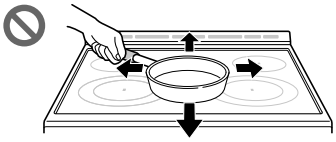

- Do not slide metal or glass across the cooktop surface.
- Do not use cookware with any dirt build-up on the bottom.
- Do not use cookware if there is foreign matter on the cooktop surface. Always clean the cooktop surface before cooking.

NOTE

- Any damage or failure of the product resulting from the items below may not be covered under the LIMITED WARRANTY.
  - Be careful not to slide pots and pans across the cooktop. Doing so will leave metal markings on the cooktop surface. To help remove these marks, use a ceramic cooktop cleaner with a cleaning pad for ceramic cooktops.

NOTE

- If pots with a thin overlay of aluminum or copper are allowed to boil dry, the overlay may leave a black discoloration on the cooktop. This should be removed immediately before heating again or the discoloration may be permanent.

EasyClean

This feature is only available on some models.

LG's EasyClean enamel technology provides two cleaning options for the inside of the range. The EasyClean feature takes advantage of LG's new enamel to help lift soils without harsh chemicals, and it runs using ONLY WATER for just 20 minutes in low temperatures to help loosen LIGHT soils before hand cleaning. EasyClean is quick and effective for small and LIGHT soils. Compared to the more intense Self Clean process, your LG oven gives you the option of cleaning with LESS HEAT, LESS TIME, and virtually NO SMOKE OR FUMES. You can reduce energy use by cleaning light oven soils with the EasyClean feature instead of Self Clean.

Benefits of EasyClean

- Helps loosen light soils before hand-cleaning
- EasyClean only uses water; no chemical cleaners
- Makes for a better Self Clean experience (On some models)
  - Delays the need for a Self Clean cycle
  - Minimizes smoke and odors
  - Can allow shorter Self Clean time

NOTE

- For models without Self Clean option
  - The EasyClean feature may not be effective in removing heavy, built-up soils. Because the range does not include a Self Clean option, clean the oven regularly using the EasyClean feature to prevent heavy, burnt-on soil from building up in the oven.

When to Use EasyClean

- Example of oven soiling

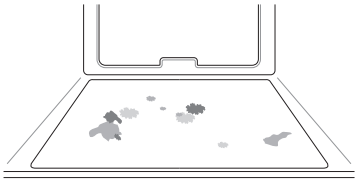

Case 1

- Soil pattern: Small drops or spots
- Types of soils: Cheese or other ingredients
- Common food items that can soil your oven: Pizza

Case 2

- Soil pattern: Light splatter
- Types of soils: Fat/grease
- Common food items that can soil your oven: Steaks, broiled / Fish, broiled / Meat roasted at low temperatures

EasyClean Instruction Guide

NOTE

- Allow the oven to cool to room temperature before using the EasyClean cycle. If your oven cavity is above 150 °F (65 °C), and the EasyClean cycle will not be activated until the oven cavity cools down.
- The range should be level to ensure that the bottom surface of the oven cavity is entirely covered by water at the beginning of the EasyClean cycle.
- For best results, use distilled or filtered water. Tap water may leave mineral deposits on the oven bottom.
- Soil baked on through several cooking cycles will be more difficult to remove with the EasyClean cycle.
- Do not open the oven door during the EasyClean cycle. Water will not get hot enough if the door is opened during the cycle.

1 Remove oven racks and accessories from the oven.

2 Scrape off and remove any burnt-on debris with a plastic scraper.

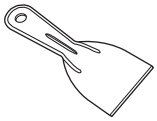

- Suggested plastic scrapers:
  - Hard plastic spatula
  - Plastic pan scraper
  - Plastic paint scraper
  - Old credit card

3 Fill a spray bottle (10 oz or 300 ml) with water and use the spray bottle to thoroughly spray the inside surfaces of the oven.

4 Use at least 1/5 (2 oz or 60 ml) of the water in the bottle to completely saturate the soil on both the walls and in the corners of the oven.

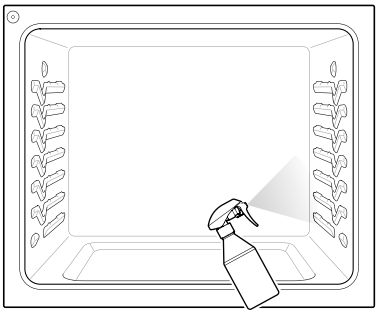

5 Spray or pour the remaining water (8 oz or 240 ml) onto the bottom center of the oven cavity. The indentation on the oven bottom should be fully covered to submerge all soils. Add water if necessary.

NOTE

- If cleaning multiple ovens, use an entire bottle of water to clean each oven. Do not spray water directly on the door. Doing so will result in water dripping to the floor.

6 Close the oven door.

- Turn the oven mode knob to select **EasyClean**.

CAUTION

- Some surfaces may be hot after the EasyClean cycle. Wear rubber gloves while cleaning to prevent burns.
- During the EasyClean cycle, the oven becomes hot enough to cause burns. Wait until the cycle is over before wiping the inside surface of the oven. Failure to do so may result in burns.
- Avoid leaning or resting on the oven door glass while cleaning the oven cavity.

7 After 3 minutes, turn the oven mode knob to the **OFF** position and wait 17 minutes more.

8 After the cleaning cycle and during hand-cleaning, enough water should remain on the oven bottom to completely submerge all soils. Add water if necessary. Place a towel on the floor in front of the oven to capture any water that may spill out during hand-cleaning.

9 Clean the oven cavity immediately after the EasyClean cycle by scrubbing with a wet, non-scratch scouring sponge or pad. (The scouring side will not scratch the finish.)

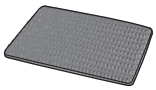

NOTE

- Do not use any steel scouring pads, abrasive pads or cleaners as these materials can permanently damage the oven surface.

10 Once the oven cavity is cleaned, wipe any excess water with a clean dry towel. Replace racks and any other accessories.

NOTE

- If you forget to saturate the inside of the oven with water before starting EasyClean, turn the oven mode knob to the **OFF** position. Wait for the range to cool to room temperature and then spray or pour water into the oven and start another EasyClean cycle.
- The cavity gasket may be wet when the EasyClean cycle finishes. This is normal. Do not clean the gasket.

NOTE

- If mineral deposits remain on the oven bottom after cleaning, use a cloth or sponge soaked in vinegar to remove them.
- Using commercial oven cleaners or bleach to clean the oven is not recommended. Instead, use a mild liquid cleanser with a pH value below 12.7 to avoid discoloring the enamel.

Removing/Assembling Lift-Off Oven Doors

NOTE

- Parts may be changed due to product improvement and may look different than shown in images.

Door Care Instructions

Most oven doors contain glass that can break.

⚠ CAUTION

- Do not close the oven door until all the oven racks are fully in place.
- Do not hit the glass with pots, pans, or any other object.
- Scratching, hitting, jarring, or stressing the glass may weaken its structure causing an increased risk of breakage at a later time.

Removing Doors

1 Fully open the door.

2 Lift up the hinge lock ❷ and flip it towards the hinge arm ❹ completely. Repeat on other side.

Locked Position	Unlocked Position
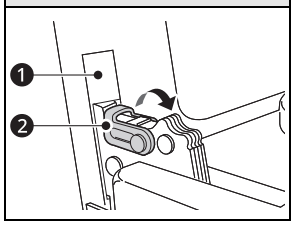	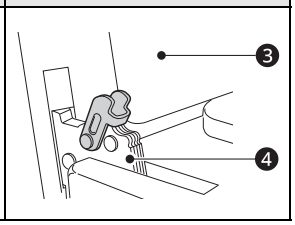

❶ Slot

❷ Hinge Lock

❸ Oven Frame

❹ Hinge Arm

3 Firmly grasp both sides of the door at the top.

4 Partially close the door to approximately 5 degrees ❶. If the position is correct, the hinge arms will move freely.

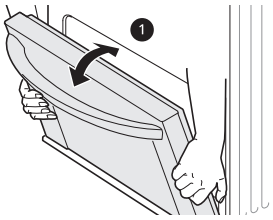

❶ about 5°

5 Lift and pull the door towards you until the hinge latches are completely loosened.

Assembling Doors

1 Firmly grasp both sides of the door at the top.

2 Fully insert the hinge arms ❶ into the slots ❷ until the indentations ❸ on the hinge arms rest on the bottom edges of the slots.

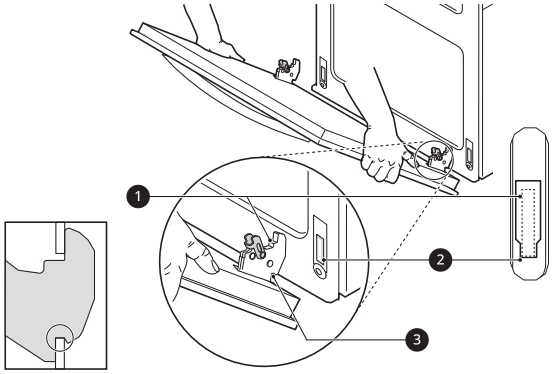

❶ Hinge Arm

❷ Bottom Edge of Slot

❸ Indentation

3 Slowly open the door fully. Make sure that the hinge arms are properly engaged in the slots.

4 Lift up the hinge lock ❷ and flip it towards the oven ❸ until it clicks into position. Repeat on other side.

Unlocked Position	Locked Position
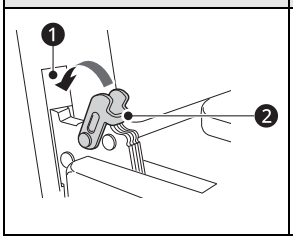	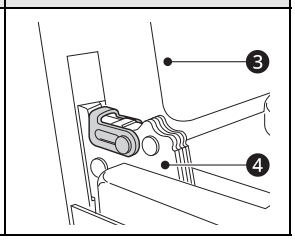

❶ Slot

❷ Hinge Lock

❸ Oven Frame

❹ Hinge Arm

5 Close the oven door.

Periodic Maintenance

Changing the Oven Light

The oven light is a standard 40-watt halogen appliance bulb. When the oven door is closed, press the light switch.

WARNING

- Make sure that the oven and lamp are cool.
- Disconnect the electrical power to the range at the main fuse or circuit breaker panel. Failure to do so can result in severe personal injury, death, or electrical shock.

1 Unplug the range or disconnect power.

2 Turn the glass lamp cover in the back of the oven counterclockwise to remove.

3 Remove the halogen lamp from the socket.

4 Insert a new halogen lamp.

5 Insert the glass lamp cover and turn it clockwise.

6 Plug in the range or reconnect the power.

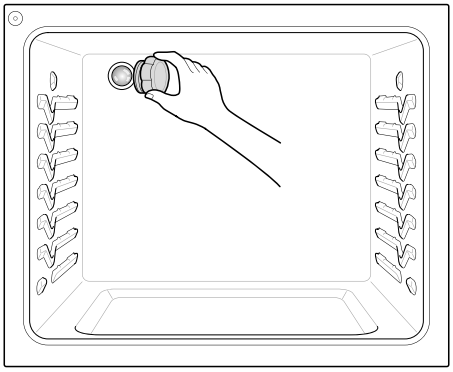

TROUBLESHOOTING

FAQs

Frequently Asked Questions

Q: What types of cookware are recommended for use with the cooktop?

A:
- The pans must have a flat bottom and straight sides.
- Only use heavy-gauge pans.
- The pan size must match the amount of food to be prepared and the size of the surface element.
- Use tight-fitting lids.
- Only use flat-bottom woks.

Q: Why do the heating elements appear to be turning ON and OFF during use of the cooktop or oven?

A: Depending on your cooktop element setting or the temperature selected in your oven, it is normal for the cooking elements to cycle on and off.

Q: Is it normal to hear a clicking noise coming from the back of my oven when I am using it?

A: Your new range is designed to maintain a tighter control over your oven's temperature. You may hear your oven's heating elements click on and off more frequently on your new oven. This is normal.

Q: Why is the time flashing?

A: This means that the product has just been plugged in, or that it has experienced a power interruption. To clear the flashing time, touch any button and reset the clock if needed.

Q: Can I use aluminum foil to catch drippings in my oven cavity?

A: Never use aluminum foil to line the bottom or sides of the oven or the warming drawer (on some models). The foil will melt and stick to the bottom surface of the oven and will not be removable. Use a foil-lined sheet pan placed on a lower oven rack to catch drippings instead. (If foil has already melted onto the bottom of the oven, it will not interfere with the oven's performance.)

Q: Can I use aluminum foil on the racks?

A: Do not cover racks with aluminum foil. Covering entire racks with foil restricts air flow, leading to poor cooking results. Use a sheet pan lined with foil under fruit pies or other acidic or sugary foods to prevent spillovers from damaging the oven finish.

⚠ CAUTION

- Foil may be used to wrap food in the oven or warming drawer, but do not allow the foil to come into contact with the exposed heating/broiling elements in the oven. The foil could melt or ignite, causing smoke, fire, or injury.

Q: What should I do if my racks are sticky and have become hard to slide in and out?

A: Over time, the racks may become hard to slide in and out. Apply a small amount of olive oil to the sides of the racks. This will work as a lubricant for easier gliding.

Q: What should I do for hard to remove stains on my cooktop?

A: The cooktop should be cleaned after every use to prevent permanent staining. When cooking foods with high sugar content, such as tomato sauce, clean the stain off with a scraper while the cooktop is still warm. Use an oven mitt when scraping to prevent burns. Refer to the MAINTENANCE section of this owner's manual for further instruction.

Q: My range is still dirty after running the EasyClean cycle. What else should I do?

A: The EasyClean cycle only helps to loosen light soils in your oven range to assist in hand-cleaning of your oven. It does not automatically remove all soils after the cycle. Some scrubbing of your oven range is required after running the EasyClean cycle.

Q: Soils on my oven walls are not coming off. How can I get the oven walls clean?

A: Soils on the side and rear walls of your oven range may be more difficult to fully soak with water. Try repeating the EasyClean process with more than the ¼ cup (2 oz or 60 ml) of spray recommended.

Q: Do I need to use all 1 ¼ cups (10 oz or 300 ml) of water for EasyClean?

A: Yes. It is highly recommended that 1 cup (8 oz or 240 ml) of water be sprayed or poured on the bottom and an additional ¼ cup (2 oz or 60 ml) of water be sprayed on walls and other soiled areas to fully saturate the soils for better cleaning performance.

Q: I see smoke coming out of my oven range’s cooktop vents during EasyClean. Is this normal?

A: This is normal. This is not smoke. It is actually water vapor (steam) from the water in the oven cavity. As the oven heats briefly during EasyClean, the water in the cavity evaporates and escapes through the oven vents.

Q: How often should I use EasyClean?

A: EasyClean can be performed as often as you wish. EasyClean works best when your oven is LIGHTLY soiled from such things as LIGHT grease splatter and small drops of cheese. Please refer to the EasyClean section in your owner's manual for more information.

Q: What is required for EasyClean?

A: A spray bottle filled with 1¼ cups (10 oz or 300 ml) of water, a plastic scraper, a non-scratch scrubbing pad and a towel. You should not use abrasive scrubbers such as heavy-duty scouring pads or steel wool.

Before Calling for Service

Review this section before calling for service; doing so will save you both time and money.

For detailed information or videos, visit www.lg.com for the troubleshooting page.

Cooking

Problem	Possible Cause & Solution
Oven will not work	**Plug on range is not completely inserted in the electrical outlet.** • Make sure electrical plug is plugged into a live, properly grounded outlet.
	Oven controls improperly set. • See the "Oven" section in the Operation chapter.
Steam is exhausted through the oven vent.	**Cooking foods with high moisture produces steam.** • This is normal.
Appliance does not operate.	**Cord is not plugged in correctly.** • Make sure cord is plugged correctly into outlet. Check circuit breakers.

Problem	Possible Cause & Solution
Appliance does not operate.	**Service wiring is not complete.** • Contact your electrician for assistance.
	Power outage. • Check house lights to be sure. Call your local electric company for service.
Oven smokes excessively during broiling.	**Control not set properly.** • Follow instructions under Setting Oven Controls.
	Meat too close to the element. • Reposition the rack to provide proper clearance between the meat and the element. Preheat broil element for searing.
	Meat not properly prepared. • Remove excess fat from meat. Cut remaining fatty edges to prevent curling.
	Insert on broiler pan wrong side up and grease not draining. • Always place the grid on the broiler pan with ribs up and slots down to allow grease to drip into the pan.
	Grease has built up on oven surfaces. Old grease or food spatters cause excessive smoking. • Regular cleaning is necessary when broiling frequently.
Food does not bake or roast properly	**Oven controls improperly set.** • See the "Oven" section in the Operation chapter.
	Rack position is incorrect or the rack is not level. • See the "Oven" section in the Operation chapter.
	Incorrect cookware or cookware of improper size being used. • See the "Oven" section in the Operation chapter.
Food does not broil properly	**Oven controls improperly set.** • Make sure you select the **Broil** mode properly.
	Improper rack position being used. • See the Broiling Guide.
	Cookware not suited for broiling. • Use broiling pan and grid.
	Aluminum foil used on the broiling pan and grid has not been fitted properly and slit as recommended. • See the "Oven" section in the Operation chapter.
	In some areas the power voltage may be low. • Preheat the broil element for 5-7 minutes. See the Broiling Guide.
Burning or oily odor emitting from the vent	**This is normal in a new oven.** • This will disappear in time.
Moisture collects on oven window or steam comes from oven vent	**This happens when cooking foods high in moisture.** • This is normal.
	Excessive moisture was used when cleaning the window. • Do not use excessive moisture when cleaning the window.

Parts & Features

Problem	Possible Cause & Solution
Range is not level.	**Poor installation.** • Place oven rack in center of oven. Place a level on the oven rack. Adjust leveling legs at base of range until the oven rack is level. • Be sure floor is level and strong and stable enough to adequately support range. • If floor is sagging or sloping, contact a carpenter to correct the situation.
	Kitchen cabinet alignment may make range appear unlevel. • Be sure cabinets are square and have sufficient room for range clearance.
Cannot move appliance easily. Appliance must be accessible for service.	**Cabinets not square or are built in too tightly.** • Contact builder or installer to make appliance accessible.
	Carpet interferes with range. • Provide sufficient space so range can be lifted over carpet.
	Anti-tip device engaged. • Uninstall the anti-tip device to move the range. Reengage the anti-tip device after pulling the range out for cleaning, service, or any other reason.
Surface units will not maintain a rolling boil or cooking is not fast enough.	**Improper cookware being used.** • Use pans which are flat and match the diameter of the surface unit selected.
	In some areas, the power(voltage) may be low. • Cover pan with a lid until desired heat is obtained.
Surface units do not work properly.	**A fuse in your home may be blown or the circuit breaker tripped.** • Replace the fuse or reset the circuit breaker.
	Cooktop controls improperly set. • Check to see the correct control is set for the surface unit you are using.
Surface unit stops glowing when changed to a lower setting.	**The unit is still on and hot.** • This is normal.
Areas of discoloration on the cooktop	**Food spillovers not cleaned before next use.** • See the "Glass-Ceramic Cooktop" section in the MAINTENANCE chapter.
	Hot surface on a model with a light-colored cooktop. • This is normal.The surface may appear discolored when it is hot. This is temporary and will disappear as the glass cools.
Frequent cycling on and off of surface units	**The element will cycle on and off to maintain the heat setting.** • This is normal.
Scratches or abrasions on cooktop surface	**Coarse particles such as salt or sand between cooktop and utensils can cause scratches.** • Be sure the cooktop surface and bottoms of utensils are clean before using. Small scratches do not affect cooking and will become less visible with time.
	Cleaning materials not recommended for glass-ceramic cooktop have been used. • See the "Glass-Ceramic Cooktop" section in the MAINTENANCE chapter.

Problem	Possible Cause & Solution
Scratches or abrasions on cooktop surface	**Cookware with rough bottom has been used.** • Use smooth, flat-bottomed cookware.
Metal marks	**Scraping of metal utensils on cooktop surface.** • Do not slide metal utensils on cooktop surface. Use a glass-ceramic cooktop cleaning creme to remove the marks. See the "Glass-Ceramic Cooktop" section in the MAINTENANCE chapter.
Brown streaks or specks	**Boilovers are cooked onto surface.** • Use a blade scraper to remove soil. See the "Glass-Ceramic Cooktop" section in the MAINTENANCE chapter.
Areas of discoloration on cooktop	**Mineral deposits from water and food.** • Remove using a glass-ceramic cooktop cleaning creme. Use cookware with clean, dry bottoms.
Oven light does not work.	**It is time to replace the lamp or the lamp is loose.** • Replace or tighten lamp. See "Changing the Oven Light" section in this Owner’s Manual.

Noises

Problem	Possible Cause & Solution
“Crackling” or “popping” sound	**This is the sound of the metal heating and cooling during cooking.** • This is normal.
A chime sounds when surface elements are turned on.	**When any cooktop burner is activated, a chime sounds to indicate the cooktop is in use.** • This is normal.

LIMITED WARRANTY

CANADA

TERMS AND CONDITIONS

ARBITRATION NOTICE: THIS LIMITED WARRANTY CONTAINS AN ARBITRATION PROVISION THAT REQUIRES YOU AND LG TO RESOLVE DISPUTES BY BINDING ARBITRATION INSTEAD OF IN COURT, UNLESS THE LAWS OF YOUR PROVINCE OR TERRITORY DO NOT PERMIT THAT, OR, IN OTHER JURISDICTIONS, IF YOU CHOOSE TO OPT OUT. FOR FURTHER CLARITY, THIS ARBITRATION PROVISION IS NOT APPLICABLE TO CONSUMERS RESIDING IN ONTARIO, BRITISH COLUMBIA OR QUÉBEC. IN ARBITRATION, CLASS ACTIONS AND JURY TRIALS ARE NOT PERMITTED. PLEASE SEE THE SECTION TITLED "PROCEDURE FOR RESOLVING DISPUTES" BELOW.

QUEBEC ONLY: LG stands behind its products and makes every reasonable effort to ensure its products can be maintained and repaired, as required. You may access the catalogue of available parts and services at https://www.lg.com/ca_en/support/. HOWEVER, LG IN NO WAY GUARANTEES AND MAKES NO REPRESENTATIONS REGARDING THE AVAILABILITY OF ANY SPECIFIC SPARE OR REPLACEMENT PART, REPAIR SERVICE OR INFORMATION OR INSTRUCTIONS FOR SUCH MAINTENANCE AT ANY TIME. LG EXPRESSLY DISCLAIMS ANY GUARANTEE, WARRANTY OR OBLIGATION IN RESPECT OF THAT AVAILABILITY.

Should your LG Electric Range ("Product") fail due to a defect in materials or workmanship under normal and proper use, during the warranty period set forth below, LG Electronics Canada, Inc. ("LGECI") will, at its option, repair, replace or pro rate the Product upon receipt of proof of the original retail purchase. This limited warranty is valid only to the original retail purchaser of the Product and applies only to a Product distributed, purchased from an authorized retailer and used within Canada, as determined at the sole discretion of LGECI.

WARRANTY PERIOD: (Note: If the original date of purchase cannot be verified, the warranty will begin sixty (60) days from the date of manufacture).	
Parts and Labor (internal/functional parts only)	Glass Cooktop Radiant Surface Units
One (1) year from the date of original retail purchase	One (1) year from the date of original retail purchase

- Replacement products and parts are warranted for the remaining portion of the original warranty period or ninety (90) days, whichever is greater.
- Replacement products and parts may be new, reconditioned, refurbished, or otherwise factory remanufactured, all at the sole discretion of LGECI.
- Proof of original retail purchase specifying the Product model and date of purchase is required to obtain warranty service under this Limited Warranty.

DISCLAIMER:

IF YOU ARE A CONSUMER SUBJECT TO QUÉBEC, BRITISH COLUMBIA OR ONTARIO'S CONSUMER PROTECTION LEGISLATION, THE EXCLUSION OF WARRANTIES CONTAINED IN THIS SECTION DO NOT EXCLUDE OR LIMIT THE RIGHTS AND REMEDIES THAT YOU MAY HAVE UNDER SUCH ACT, INCLUDING THE RIGHT TO MAKE A CLAIM UNDER ANY OF THE STATUTORY WARRANTIES PROVIDED THEREUNDER.

LGECI'S SOLE LIABILITY IS LIMITED TO THE LIMITED WARRANTY SET OUT ABOVE, UNLESS SUCH LIMITATION IS PROHIBITED BY THE LAWS OF THE PROVINCE IN WHICH YOU RESIDE. EXCEPT AS EXPRESSLY PROVIDED ABOVE, OR IF OTHERWISE PROHIBITED BY THE LAW OF THE PROVINCE IN WHICH YOU RESIDE, LGECI DOES NOT MAKE ANY OTHER WARRANTIES OR CONDITIONS RESPECTING THE PRODUCT, AND HEREBY DISCLAIMS, ALL OTHER WARRANTIES AND CONDITIONS RESPECTING THE PRODUCT, WHETHER EXPRESS OR IMPLIED, INCLUDING BUT NOT LIMITED TO, ANY IMPLIED WARRANTY OR CONDITION OF MERCHANTABILITY OR FITNESS FOR A PARTICULAR PURPOSE, AND NO REPRESENTATIONS SHALL BE BINDING ON LGECI. LGECI DOES NOT AUTHORIZE ANY PERSON TO CREATE OR ASSUME FOR IT ANY OTHER WARRANTY OBLIGATION OR LIABILITY IN CONNECTION WITH THE PRODUCT. TO THE EXTENT THAT ANY WARRANTY OR CONDITION IS IMPLIED BY LAW, IT IS LIMITED TO THE WARRANTY PERIOD SET OUT ABOVE. UNDER NO CIRCUMSTANCES SHALL LGECI, THE

MANUFACTURER OR DISTRIBUTOR OF THE PRODUCT, BE LIABLE FOR ANY INCIDENTAL, CONSEQUENTIAL, SPECIAL, DIRECT, INDIRECT, PUNITIVE OR EXEMPLARY DAMAGES, INCLUDING, WITHOUT LIMITATION, LOSS OF GOODWILL, LOST PROFITS, LOSS OF ANTICIPATED PROFITS, LOST REVENUE, LOSS OF USE, OR ANY OTHER DAMAGE, WHETHER ARISING DIRECTLY OR INDIRECTLY FROM ANY CONTRACTUAL BREACH, FUNDAMENTAL BREACH, TORT OR OTHERWISE, OR FROM ANY ACTS OR OMISSIONS. LGECI'S TOTAL LIABILITY, IF ANY, SHALL NOT EXCEED THE PURCHASE PRICE PAID BY YOU FOR THE PRODUCT.

This Limited Warranty gives you specific legal rights. You may also have other rights that vary from province to province depending on applicable provincial laws. Any term of this Limited Warranty that negates or varies any implied condition or warranty under provincial law is severable where it conflicts with such provincial law without affecting the remainder of this warranty's terms.

THIS LIMITED WARRANTY DOES NOT COVER:

- Service trips to i) deliver, pick up, or install or; educate on how to operate the Product; ii) correct wiring; or iii) correct unauthorized repairs or installations of the Product;
- Damage or failure of the Product to perform during power failures and interrupted or inadequate electrical service;
- Damage or failure resulting from operating the Product in a corrosive atmosphere or contrary to the instructions outlined in the Product's owner's manual;
- Damage or failure to the Product caused by accidents, pests and vermin, lightning, wind, fire, floods, acts of God, or any other causes beyond the control of LGECI or the manufacturer;
- Damage or failure resulting from misuse, abuse, improper installation, repair, or maintenance of the Product. Improper repair includes use of parts not authorized or specified by LGECI. Improper installation or maintenance includes installation or maintenance contrary to the Product's owner's manual;
- Damage or failure caused by unauthorized modification or alteration of the Product, or if used for other than the intended household purpose/use of the Product, or damage or failure resulting from any water leakage due to improper installation of the Product;
- Damage or failure caused by incorrect electrical current, voltage or plumbing codes;
- Damage or failure caused by use that is other than normal household use, including, without limitation, commercial or industrial use, including use in commercial offices or recreational facilities, or as otherwise outlined in the Product's owner's manual;
- Damage or failure caused by transportation and handling, including scratches, dents, chips and/or other damage to the finish of the Product, unless such damage results from defects in materials or workmanship and is reported to LGECI within one (1) week of delivery of the Products;
- Damage or missing items to any display, open box, refurbished or discounted Product;
- Refurbished Product or any Product sold "As Is", "Where Is", "With all Faults", or any similar disclaimer;
- Products with original serial numbers that have been removed, altered or cannot be readily determined at the discretion of LGECI;
- Increases in utility costs and additional utility expenses in any way associated with the Product;
- Any noises associated with normal operation of the Product;
- Replacement of light bulbs, filters, fuses or any other consumable parts;
- Replacement of any part that was not originally included with the Product;
- Costs associated with removal and/or reinstallation of the Product for repairs; and
- Shelves, drawers, handle and accessories to the Product, except for internal/functional parts covered under this Limited Warranty.
- Coverage for "in Home" repairs, for products in-warranty, will be provided if the Product is within a 150 km radius from the nearest authorized service center (ASC), as determined by LG Canada. If your Product is located outside a 150 km radius from a ASC, as determined by LG Canada, it will be your responsibility to bring the Product, at your sole expense, to the ASC for in-warranty repair.

Not Covered by this Limited Warranty

Problem	Possible Cause & Prevention
Cooktop crack	**Cooktop crack caused by impact of object** 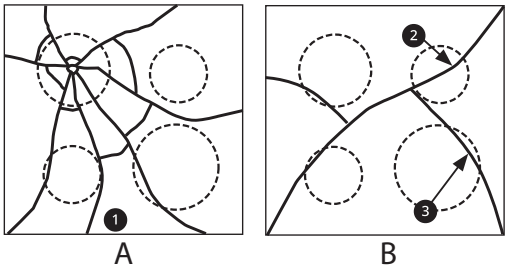 • A: Out of warranty - ❶ Mechanical breakage • B: In warranty - ❷ Primary crack ❸ Secondary crack • DO NOT store heavy items above the cooktop surface as they could fall and damage it. • DO NOT scratch the cooktop or the cooktop could crack. • Clean the cooktop before and after using. **NOTE** • Damage caused after delivery (Not covered by warranty)
Cooktop enamel chipping off	**Improper usage** 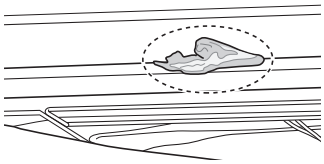 • Do not hit enamel cooktop.
Pitting of the cooktop glass	**If not removed immediately, sugary spillovers (such as preserves, ketchup, tomato sauce, jellies, fudge, candy, syrups, or chocolate) or melted plastic or foil can cause surface pitting of the cooktop. (Not covered by warranty)** • Remove the molten material IMMEDIATELY with a metal razor scraper. • For safety, wear an oven mitt or hot pad while scraping the hot surface.
Oven or racks are stained after using aluminum foil	**Aluminum foil has melted in the oven** • Never cover the oven bottom or cover an entire rack with materials such as aluminum foil. • If the foil has already melted onto the oven, it will not affect the performance of the oven.

Problem	Possible Cause & Prevention
Surface is not level **Oven is tipping**	**Range not leveled** 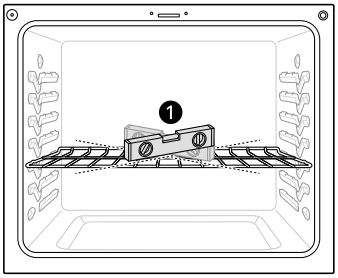 • Check with installer first. • Use carpenter's level ❶ to check level. **Anti-tip device not installed correctly** 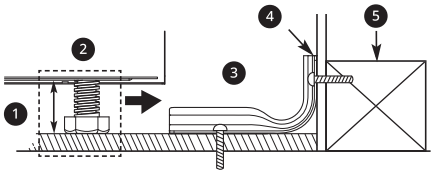 ❶ Approximately 0.65" (16.5 mm) ❷ Level both sides of range ❸ Screw must enter wood or concrete ❹ Anti-tip bracket ❺ Wall plate • Check with installer first.

All costs and expenses associated with the above excluded circumstances, listed under the heading, This Limited Warranty Does Not Cover, shall be borne by the consumer.

TO OBTAIN WARRANTY SERVICE AND ADDITIONAL INFORMATION, PLEASE CALL OR VISIT OUR WEBSITE:

Call 1-888-542-2623 (8 am - 9 pm EST, 365 days) and select the appropriate option from the menu, or visit our website at http://www.lg.com

PROCEDURE FOR RESOLVING DISPUTES:

EXCEPT WHERE PROHIBITED AT LAW (INCLUDING WITH RESPECT TO QUÉBEC, BRITISH COLUMBIA AND ONTARIO CONSUMERS), ALL DISPUTES BETWEEN YOU AND LG ARISING OUT OF OR RELATING IN ANY WAY TO THIS LIMITED WARRANTY OR THE PRODUCT SHALL BE RESOLVED EXCLUSIVELY THROUGH BINDING ARBITRATION, AND NOT IN A COURT OF GENERAL JURISDICTION. EXCEPT WHERE PROHIBITED AT LAW (INCLUDING WITH RESPECT TO QUÉBEC, BRITISH COLUMBIA AND ONTARIO CONSUMERS), YOU AND LG BOTH IRREVOCABLY AGREE TO WAIVE THE RIGHT TO A JURY TRIAL AND TO BRING OR PARTICIPATE IN A CLASS ACTION.

Definitions. For the purposes of this section, references to "LG" mean LG Electronics Canada, Inc., its parents, subsidiaries and affiliates, and each of their officers, directors, employees, agents, beneficiaries, predecessors in interest, successors, assigns and suppliers; references to "dispute" or "claim" shall include any dispute, claim or controversy of any kind whatsoever (whether based in contract, tort, statute, regulation, ordinance, fraud, misrepresentation or any other legal or equitable theory) arising out of or relating in any way to the sale, condition or performance of the product or this Limited Warranty.

Notice of Dispute. In the event you intend to commence an arbitration proceeding, you must first notify LG in writing at least 30 days in advance of initiating the arbitration by sending a letter to LGECI Legal Team at 20 Norelco Drive, North York, Ontario, Canada M9L 2X6 (the "Notice of Dispute"). You and LG

agree to engage in good faith discussions in an attempt to amicably resolve your claim. The notice must provide your name, address, and telephone number; identify the product that is the subject of the claim; and describe the nature of the claim and the relief being sought. If you and LG are unable to resolve the dispute within 30 days of LG's receipt of the Notice of Dispute, the dispute shall be resolved by binding arbitration in accordance with the procedure set out herein. You and LG both agree that, during the arbitration proceeding, the terms (including any amount) of any settlement offer made by either you or LG will not be disclosed to the arbitrator until the arbitrator determines the dispute.

Agreement to Binding Arbitration and Class Action Waiver. Upon failure to resolve the dispute during the 30 day period after LG's receipt of the Notice of Dispute, you and LG agree to resolve any claims between you and LG only by binding arbitration on an individual basis, unless you opt out as provided below, or you reside in a jurisdiction that prevents full application of this clause in the circumstances of the claims at issue (in which case if you are a consumer, this clause will only apply if you expressly agree to the arbitration). To the extent permitted by applicable law, any dispute between you and LG shall not be combined or consolidated with a dispute involving any other person's or entity's product or claim. More specifically, without limitation of the foregoing, except to the extent such a prohibition is not permitted at law, any dispute between you and LG shall not under any circumstances proceed as part of a class or representative action. Instead of arbitration, either party may bring an individual action in small claims court, but that small claims court action may not be brought on a class or representative basis except to the extent this prohibition is not permitted at law in your province or territory of jurisdiction as it relates to the claims at issue between you and LG. This does not apply to consumers in Ontario, British Columbia and Québec. In accordance with provincial legislation, the consumer and LG may agree to resolve the dispute using any procedure available, including commencing the action before the competent courts of those provinces.

Arbitration Rules and Procedures. To begin arbitration of a claim, either you or LG must make a written demand for arbitration. The arbitration will be private and confidential, and conducted on a simplified and expedited basis before a single arbitrator chosen by the parties under the provincial or territorial commercial arbitration law and rules of the province or territory of your residence. You must also send a copy of your written demand to LG at LG Electronics, Canada, Inc., Attn: Legal Department- Arbitration, 20 Norelco Drive, North York, Ontario M9L 2X6. This arbitration provision is governed by your applicable provincial or territorial commercial arbitration legislation. For consumers in Ontario, British Columbia and Québec, the applicable arbitration legislation only applies if consumers agree to submit the dispute to arbitration. Judgment may be entered on the arbitrator's award in any court of competent jurisdiction. All issues are for the arbitrator to decide, except that, issues relating to the scope and enforceability of the arbitration provision and to the arbitrability of the dispute are for the court to decide. The arbitrator is bound by the terms of this provision.

Governing Law. The law of the province or territory of your purchase shall govern this Limited Warranty and any disputes between you and LG except to the extent that such law is preempted by or inconsistent with applicable federal or provincial/territorial law. Should arbitration not be permitted for any claim, action, dispute or controversy between you and LG, you and LG attorn to the exclusive jurisdiction of the courts of the province or territory of your purchase for the resolution of the claim, action, dispute or controversy between you and LG.

Fees/Costs. You do not need to pay any fee to begin an arbitration. Upon receipt of your written demand for arbitration, LG will promptly pay all arbitration filing fees unless you seek more than $25,000 in damages, in which case the payment of these fees will be governed by the applicable arbitration rules. Except as otherwise provided for herein, LG will pay all filing, administration and arbitrator fees for any arbitration initiated in accordance with the applicable arbitration rules and this arbitration provision. If you prevail in the arbitration, LG will pay your attorneys' fees and expenses as long as they are reasonable, by considering factors including, but not limited to, the purchase amount and claim amount. Notwithstanding the foregoing, if applicable law allows for an award of reasonable attorneys' fees and expenses, an arbitrator can award them to the same extent that a court would. If the arbitrator finds either the substance of your claim or the relief sought in the demand is frivolous or brought for an improper purpose (as measured by the applicable laws), then the payment of all arbitration fees will be governed by the applicable arbitration rules. In such a situation, you agree to reimburse LG for all monies previously disbursed by it that are otherwise your obligation to pay under the applicable arbitration rules. Except as otherwise provided for, LG waives any rights it may have to seek attorneys' fees and expenses from you if LG prevails in the arbitration.

Hearings and Location. If your claim is for $25,000 or less, you may choose to have the arbitration conducted solely (1) on the basis of documents submitted to the arbitrator, (2) through a telephonic

hearing, or (3) by an in-person hearing as established by the applicable arbitration rules. If your claim exceeds $25,000, the right to a hearing will be determined by the applicable arbitration rules. Any in-person arbitration hearings will be held at the nearest, most mutually-convenient arbitration location available within the province or territory in which you reside unless you and LG both agree to another location or agree to a telephonic arbitration.

Severability and Waiver. If any portion of this Limited Warranty (including these arbitration procedures) is unenforceable, the remaining provisions will continue in full force and effect to the maximum extent permitted by applicable law. Should LG fail to enforce strict performance of any provision of this Limited Warranty (including these arbitration procedures), it does not mean that LG intends to waive or has waived any provision or part of this Limited Warranty.

Opt Out. The arbitration provision requires you and LG to resolve disputes by binding arbitration instead of court, unless the laws of your province or territory do not permit that, or, in other jurisdictions, if you choose to opt out. The arbitration provision does not apply to consumers in Ontario, British Columbia and Québec.

For individuals that fall within the binding arbitration provisions, you may opt out of this dispute resolution procedure. If you opt out, neither you nor LG can require the other to participate in an arbitration proceeding. To opt out, you must send notice to LG no later than 30 calendar days from the date of the first consumer purchaser's purchase of the product by either (i) sending an e-mail to optout@lge.com, with the subject line: "Arbitration Opt Out;" or (ii) calling 1-800-980-2973. You must include in the opt out e-mail or provide by telephone: (a) your name and address; (b) the date on which the product was purchased; (c) the product model name or model number; and (d) the serial number (the serial number can be found (i) on the product; or (ii) online by accessing https://www.lg.com/ca_en/findmodel_serial/).

In the event that you "Opt Out", the law of the province or territory of your residence shall govern this Limited Warranty and any disputes between you and LG except to the extent that such law is preempted by or inconsistent with applicable federal or provincial/territorial law. Should arbitration not be permitted for any claim, action, dispute or controversy between you and LG, you and LG agree to attorn to the exclusive jurisdiction of the courts of the province or territory of your residence for the resolution of the claim, action, dispute or controversy between you and LG.

You may only opt out of the dispute resolution procedure in the manner described above (that is, by e-mail or telephone); no other form of notice will be effective to opt out of this dispute resolution procedure. Opting out of this dispute resolution procedure will not affect the coverage of the Limited Warranty in any way, and you will continue to enjoy the full benefits of the Limited Warranty. If you keep this product and do not opt out, then you accept all terms and conditions of the arbitration provision described above.

Conflict of Terms. In the event of a conflict or inconsistency between the terms of this Limited Warranty and the End User License Agreement ("EULA") in regards to dispute resolution, the terms of this Limited Warranty shall control and govern the rights and obligations of the parties and shall take precedence over the EULA.

Memo

LG Customer Information Center	Centro de Información al Cliente LG	Centre de Service à la Clientèle de LG
For inquiries or comments, visit **www.lg.com** or call:	Para consultas o comentarios, visite **www.lg.com** o llame por teléfono:	Pour des questions ou des commentaires, visitez **www.lg.com/ca_fr** ou appelez :
1-800-243-0000 U.S.A.	1-800-243-0000 EE.UU.	1-800-243-0000 ÉTATS-UNIS
1-888-542-2623 CANADA	1-888-542-2623 CANADÁ	1-888-542-2623 CANADA
Register your product Online!	¡Registre su producto en línea!	Enregistrez votre produit en ligne!
www.lg.com	www.lg.com	www.lg.com/ca_fr