OWNER'S MANUAL

Omnidirectional portable speaker

Please read this manual carefully before operating your set and retain it for future reference.

Model

RP4

RP4B

RP4BE

RP4G

2208_Rev03

www.lg.com
Copyright © 2021-2022 LG Electronics Inc. All Rights Reserved.

Omnidirectional portable speaker Quick Guide

Using Easily in Order

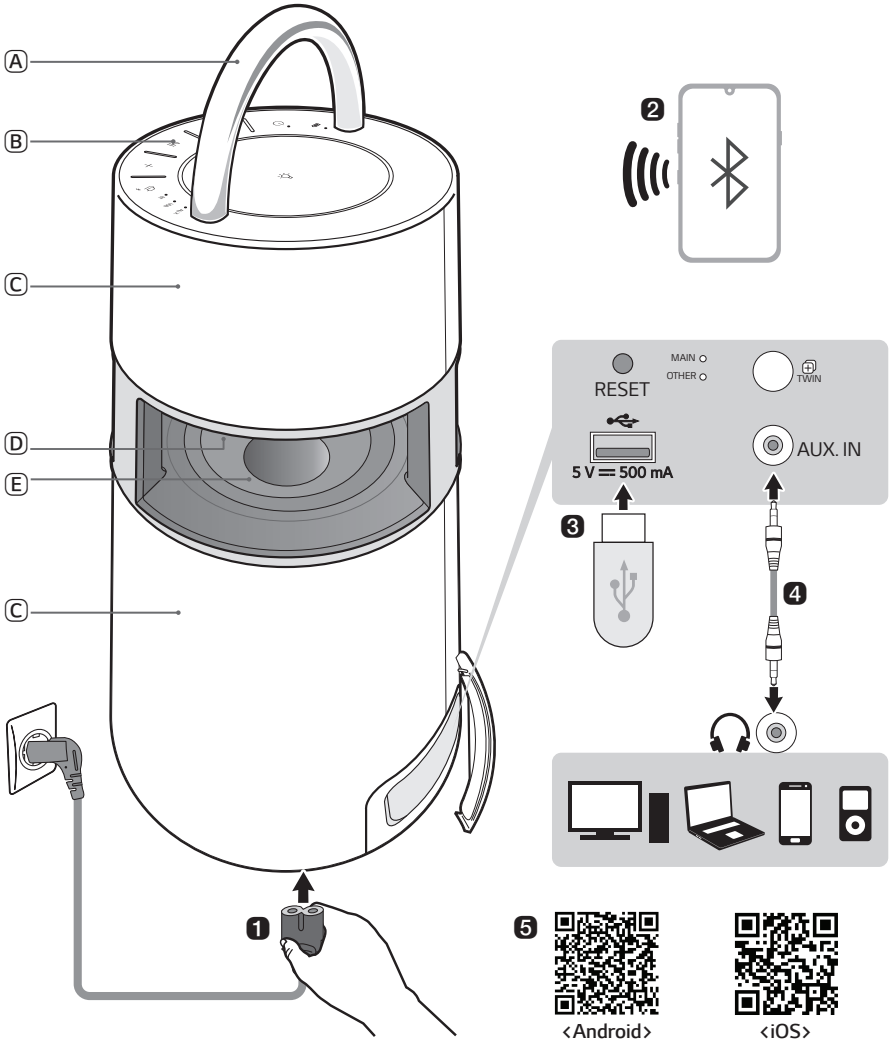

Ⓐ Handle
Ⓑ Controls
Ⓒ Speaker
Ⓓ Mood lighting
Ⓔ Woofer

❶ Connect the power cord to the product and charge it before use. You can find the power socket at the bottom of the product.

❷ Connecting the Speaker to a Smartphone Using Bluetooth (→ See "Connecting Smartphone to the Speaker via Bluetooth" on page 12.)

① Press the **Power** button to turn on the product.
② Press and hold the **Function** button on the product until you hear a notification sound. **Bluetooth** LED blinks for 60 seconds.
③ Tap the **Settings** button on your smartphone and select **Bluetooth**. Turn on the **Bluetooth** function. (**Off** > **On**)
④ From the list of smartphone devices, find and tap on "LG-RP4(XX)."
⑤ Once the smartphone is connected to the product via **Bluetooth**, the **Bluetooth** LED will turn on. Play a desired track in the music app on your smartphone.

❸ Playing Music from the USB (→ See "Connecting to USB" on page 17.)

① Open the back cover of the product and plug the USB storage device into the USB terminal.
② Press the **Power** button to turn on the product.
③ Press the **Function** button on the product repeatedly to select the USB function. The USB LED will turn on.
④ Press the **Play/Pause** button to enjoy the music.

❹ Connecting to an External Device (→ See "Connecting to an External Device" on page 19.)

① Open the back cover of the product and connect the external device to the AUX. IN terminal via a 3.5 mm stereo cable.
② Press the **Power** button to turn on the product.
③ Press the **Function** button on the product repeatedly to select AUX. The AUX LED will turn on. If you play music on the connected external device, you can start listening on this product.

❺ Connecting to the LG XBOOM App (→ See “Connecting to the LG XBOOM App” on page 21.)

① Find the **LG XBOOM app** on the Google Play or App Store and install it on your smartphone.

② Run the **LG XBOOM app** and use its functions.

❻ Power Saving (→ See “Power Saving Mode” on page 26.)

If there is no playback or button input for 15 minutes, the product turns off automatically. On the **LG XBOOM app**, you can enable or disable [Auto Power Management].

Table of Contents

Omnidirectional portable speaker Quick Guide

2 Using Easily in Order

Exploring the Product

6 Top
8 Back

Charge

10 Charging the Battery
11 Checking Battery Status

Connecting to Bluetooth

12 Connecting Smartphone to the Speaker via Bluetooth
15 Connecting with two smartphones

Connecting to USB

17 Connecting the product to a USB storage device

Connecting to an External Device

19 Connecting via 3.5 mm Stereo Cable

Connecting to the LG XBOOM App

21 Installing app

Using the Wireless Party Link-Twin mode

23 Connecting Two Speakers

Additional Functions

25 Resetting the product
25 Initialising the Software
26 Power Saving Mode

Safety Precautions

27 Safety and Regulatory

Things to Check before Reporting Malfunction

30 Troubleshooting

Appendix

32 Product Specifications
33 Registered Trademarks and Licenses
34 Handling the Product

Exploring the Product

Top

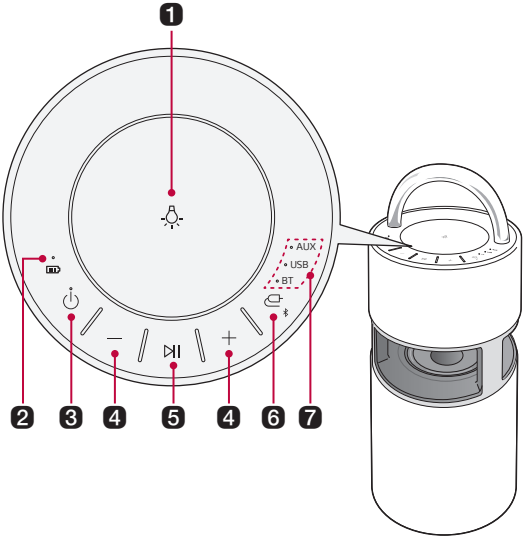

1	**Mood lighting**	Press the button to select the desired mood lighting. **Mood lighting**: Ambient / Nature / Party / Off • Press and hold the **Mood Lighting** button to turn off the mood lighting.
2	**Battery LED**	Please check the battery charging level and battery status. (→ See "Checking Battery Status" on page 11.)
3	**Power**	It turns on/off the product. • If you press and hold the **Power** button for 2 seconds with product turned on, you can see the battery status on the battery LED.
4	**Volume**	It controls the volume level.
5	**Play/Pause**	Press the button to operate the product.

Function	Operation	How to Use
USB/BT	Play/Pause	Press the button.
USB/BT	Moving to the next music	Press the button twice quickly.
USB/BT	Moving to the previous music	Press the button three times quickly.
AUX	Mute	Press the button.

❻ **Function**	Press the button repeatedly to select the desired input mode or function.

Function LED	Description
BT	It connects the product via **Bluetooth**.
USB	It connects the product to a USB storage device.
AUX	It connects a portable external device with a 3.5 mm stereo cable.

- Press and hold the **Function** button for 2 seconds or longer and connect the **Bluetooth** device within 60 seconds. (→ See "Connecting Smartphone to the Speaker via Bluetooth" on page 12.)
- When you move to the **Bluetooth** function and find no connected device, the BT LED blinks for 60 seconds.

❼ **Function LED**	Indicates the input mode or **Bluetooth** connection status.

⚠ CAUTION

- Place the product at a safe distance from the child's reach. Otherwise it may result in the product falling down and causing personal injury and/or property damage.
- Be careful that the speaker does not fall down. Otherwise it may result in the speaker malfunctioning and causing personal injury and/ or property damage.

Back

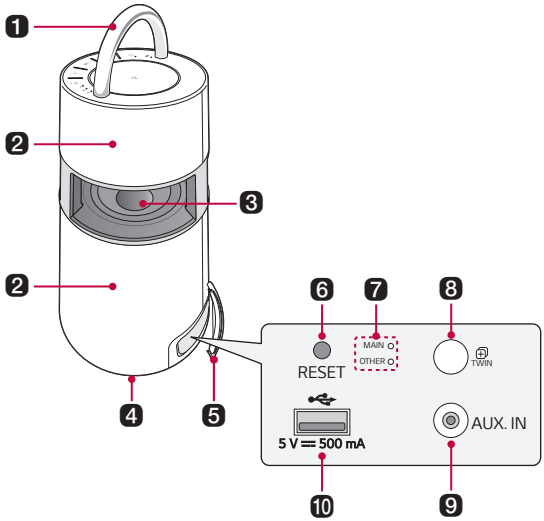

1	**Handle**	Use it when carrying the product.
2	**Speaker**	Sound comes from the entire product.
3	**Woofer**	It is a bass-only speaker.
4	**Power input**	You can connect the power cord to charge the battery of the product.
5	**Back Cover**	Make sure to fully close the back cover after use.
6	**RESET** RESET	When the product does not function properly, use a sharp object such as a pin to press the hole.
7	**Wireless Party Link LED**	You can check the connection status of the Wireless Party Link-Twin mode.
8	**TWIN** TWIN	You can connect two products in the Wireless Party Link-Twin mode.
9	**AUX. IN**	You can connect the product to a portable external device with a 3.5 mm stereo cable and start enjoying music.
10	**USB port**	Plug in a USB storage device to enjoy music with the product.

⚠ CAUTION

- Be careful not to expose the product to sunlight for a long time to prevent discolouration.
- Be careful when using the product outdoors since the handle may become hot after being exposed to the sun for a long time.
- Be careful as the speaker may be damaged if you inadvertently press the woofer within the reach of your hand.

Charge

Charging the Battery

This product has a built-in battery. Make sure to charge the battery sufficiently before use. You can find the power socket at the bottom of the product.

1. Connect the power cord to the power input terminal.
2. Connect the power plug to an outlet.

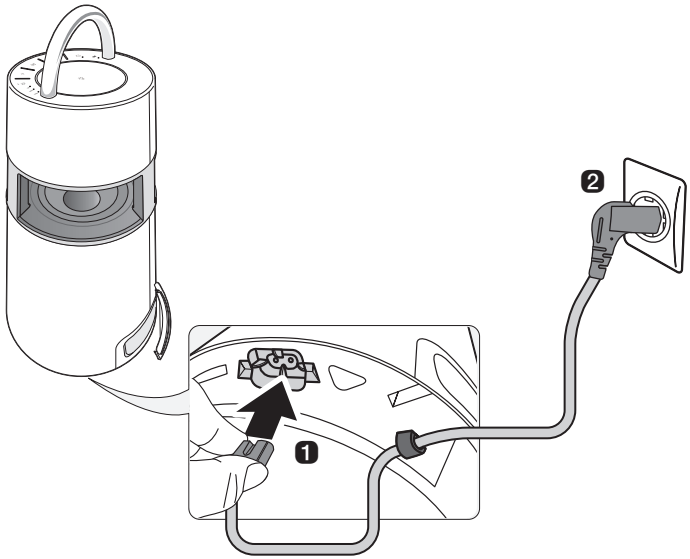

Note

- It takes about 5 hours to fully charge the speaker. The charging time may differ depending on the battery status or the product operation status.
- Once the battery is fully charged, you can use the speaker for about 10 hours.

Checking Battery Status

Charging Status

When the battery of the product starts charging, you can see the charging status in the battery LED.

Battery LED	LED Status	Battery Status
	Turns on in green.	Charging is complete.
	It is red.	Charging is in progress.

Note

- Playing tracks while charging may lengthen the charging time.
- When the speaker's battery is fully charged with the power off, the battery LED lights up green for 15 seconds and then off.

Use Status

When the product is turned on, the battery status is displayed on the battery LED for 3 seconds.

If you press and hold the **Power** button for 2 seconds with product on, you can see the battery LED for 3 seconds depending on the battery status.

Battery LED	LED Status	Battery Status
	Turns on in green.	The battery level is above 70 %.
	Turns on in orange.	The remaining battery level is 70 to 10 %.
	It blinks red continuously and you can hear a notification sound once.	The battery level is below 10 %, and the battery needs to be charged.

Note

- The battery status cannot be checked while charging.

Connecting to Bluetooth

Connecting Smartphone to the Speaker via Bluetooth

You can play music files stored on a **Bluetooth** device, or run music apps to enjoy the music with this product.

Please check the following first.

- The following are the **Bluetooth** specifications of the product.
  - Version: 4.0
  - Codec: SBC, AAC
- How to connect the device to the product may differ depending on the type and model of the **Bluetooth** device. For information on how to connect the product, refer to the user manual of the **Bluetooth** device to be connected.

Select the [**Bluetooth**] menu on the smartphone's **Settings** screen.

The menu access method may differ depending on the smartphone manufacturer and model.

1. Press the **Power** button of the product and turn it on.
   Press and hold the **Function** button on the product until you hear a notification sound. **Bluetooth** LED blinks for 60 seconds.

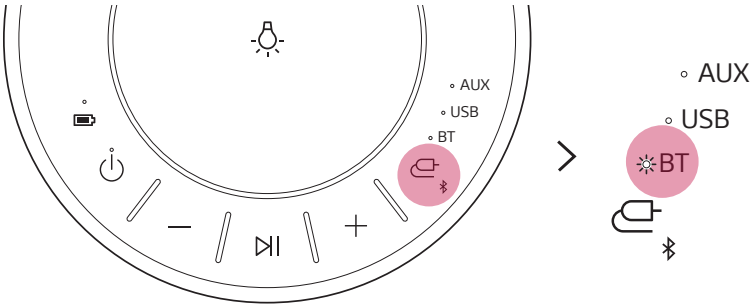

2. Tap the Setting (/) button on your smartphone and select **Bluetooth**.

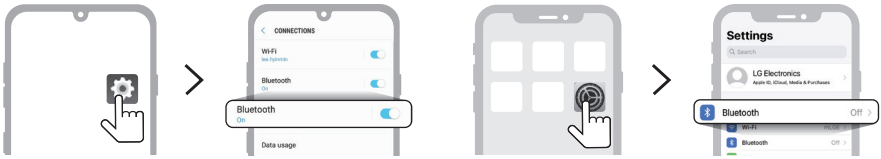

<Android phone> <iPhone>

3. Turn on the **Bluetooth** function. (**Off** > **On**)

4 You will see a list of connectable devices on the smartphone screen. Find and tap the name "LG-RP4(XX)".

5 Once the smartphone is connected to product via **Bluetooth**, the **Bluetooth** LED will turn on.

6 If LG-RP4(XX) does not appear on the list, tap on the **Refresh** icon on an Android phone or restart **Bluetooth** on an iPhone.

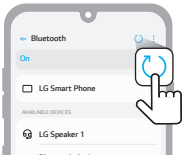

<Android phone>

<iPhone>

7 Select and play a track on the smartphone.

Note

- The closer the **Bluetooth** device is to the speaker, the better connection you will get.
- If the **Bluetooth** device is not connected, the **Bluetooth** LED will blink. Connect the product again.
- When using **Bluetooth**, adjust the volume of the **Bluetooth** device to an appropriate level.
- XX are the last two digits of the **Bluetooth** address. An example would be "LG-RP4(08)."
- When power is connected to this product, if you try to connect to the product via a **Bluetooth** product with a connection history, the product will automatically turn on and connect to the **Bluetooth** device. (Only while charging, you can turn on this product using the **LG XBOOM app**.)

Connecting with two smartphones

Pairing (Connecting) Multiple Phones

1. Connect the product and a smartphone first. (→ See "Connecting Smartphone to the Speaker via Bluetooth" on page 12.)
2. Press and hold the **Function** button on the product until you hear a notification sound. **Bluetooth** LED blinks for 60 seconds.

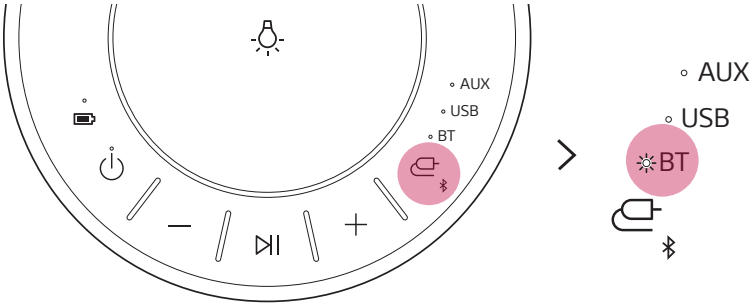

3. Connect an additional smartphone to the product within 60 seconds. (→ See "Connecting Smartphone to the Speaker via Bluetooth" on page 12.)

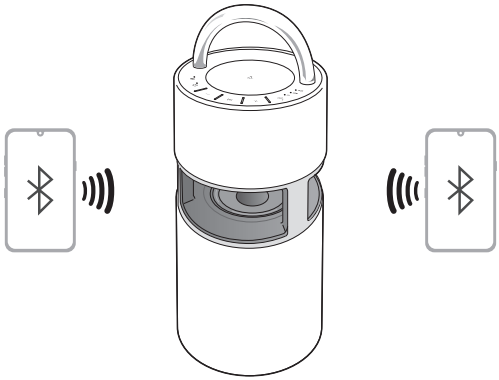

4 When two smartphones and the product are connected, the **Bluetooth** LED turns on.

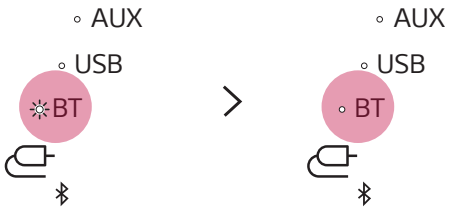

Note

- Multi-phone pairing (connecting) connects up to two smartphones.
- Even if two smartphones are connected, the product plays music only on one smartphone. If the music stops on the currently played smartphone, it can be played on another smartphone.
- When two smartphones are connected and the product is turned off and on, only the last connected smartphone or the most recently played smartphone is automatically connected.
- Only smartphones support multi phone pairing (connection). (Depending on specifications of the connected smartphones, multi phone pairing (connection) may not be connected.)

Connecting to USB

You can enjoy sound by connecting a USB storage device with music files to the product.

Connecting the product to a USB storage device

1 Open the back cover of the product and plug the USB storage product into the USB terminal.

- The product cannot play any devices connected with a USB storage device hub or a USB storage device cable.
- The product cannot be connected to a USB storage device, USB type MP3 player or card reader that requires a separate device drive to be installed.

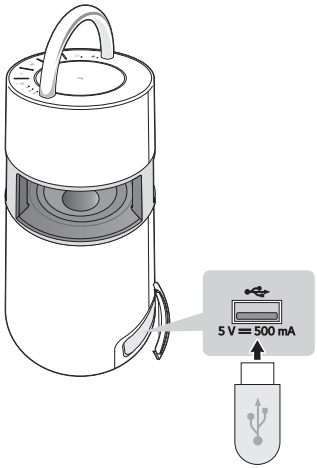

2 Press the **Power** button to the turn on the product.

3 Press the **Function** button on the product repeatedly to select the USB function. The USB LED will turn on.

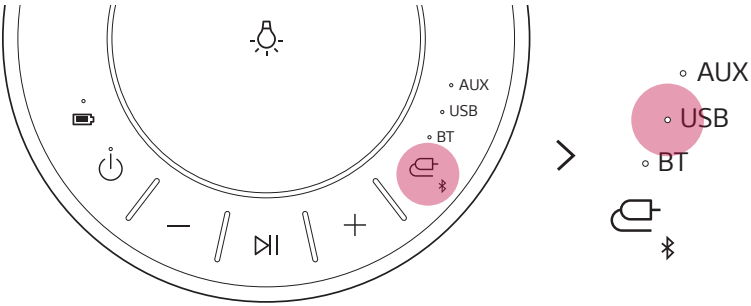

4 Press the **Play/Pause** button to enjoy the music.

Note

- USB devices with large storage volume can take several minutes or more to browse files.
- LG Electronics is not responsible for any data loss. Please always back up the data to minimise damage caused by data loss.
- Only FAT16/FAT32 formats are supported. exFAT/NTFS format is not supported.
- When the USB storage device is not properly recognised, the USB LED will blink. Check if the USB storage device is supported and plug in again.

USB storage devices supported

USB flash device	USB 2.0 or USB 1.1

This product may not recognise some USB storage devices.

Playable file specifications

File extension	Sampling frequency	Bitrate
MP3	32 kHz - 48 kHz	32 kbps - 320 kbps
WMA	32 kHz - 48 kHz	40 kbps - 192 kbps

- Number of playable files: 2,000 or less
- Maximum number of directories: 200 or less
- The product cannot play the files protected by DRM (Digital Rights Management).
- The product cannot play video files in a USB storage device.

Connecting to an External Device

Connecting via 3.5 mm Stereo Cable

You can connect the product and various external devices via a 3.5 mm stereo cable to enjoy the music.

1 Open the back cover of the product and connect the external device to the AUX. IN terminal via a 3.5 mm stereo cable.

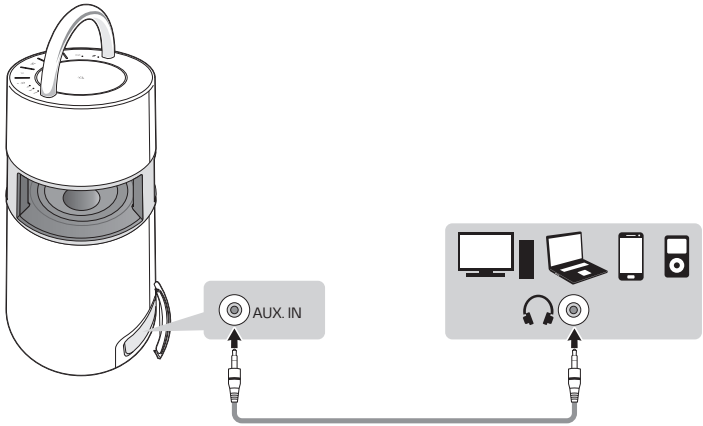

2 Press the **Power** button to the turn on the product.

❸ Press the **Function** button on product repeatedly to select AUX. The AUX LED will turn on.

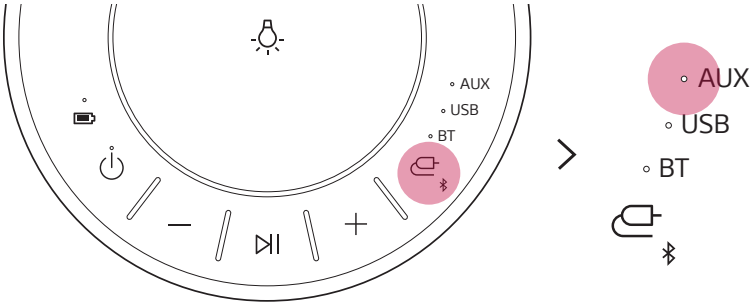

❹ If you play music on the connected external device, you can start listening on this product.

Connecting to the LG XBOOM App

Use the various functions of the speaker on the **LG XBOOM app**.

Please check the following first.

- The **LG XBOOM app** is available in the versions listed below.
  - Android OS: Version 5.0 or higher
  - iOS OS: Version 10 or higher

Installing app

To install the **LG XBOOM app**, scan the QR code with an app or install **LG XBOOM app** on the Google Play or App Store.

Downloading with a QR code

1. Scan the QR code to the right with a QR code scan app.
2. You will be directed to the page where you can download the **LG XBOOM app**. Tap the app to install it.

<Android Phone OS>

<iPhone OS>

Downloading in Google Play or App Store

1. Find the **LG XBOOM app** on the Google Play or App Store and install it on your smartphone.

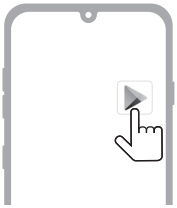

Android™ Phone

iPhone

2. Connect the smartphone to the speaker via **Bluetooth**. (→ See "Connecting Smartphone to the Speaker via Bluetooth" on page 12.)
3. Open the **LG XBOOM app** installed on the smartphone.
4. Follow the instructions on the **LG XBOOM app**. Agree to the Terms of Service, notice windows, access settings, etc.
5. Start using the various functions on the **LG XBOOM app**.

Note

- The menu access method may differ depending on the smartphone manufacturer and OS.
- Google, Android, and Google Play are trademarks of Google LLC.

Using the Wireless Party Link-Twin mode

You can use two speakers to enjoy the music.

Connecting Two Speakers

Connecting two products that support the Wireless Party Link-Twin mode delivers deeper and richer sound.

Please check the following first.

- To use the Wireless Party Link-Twin mode, you need one more product that supports Wireless Party Link.

1 Open the cover on the back of product and press the **TWIN** button to select **MAIN** (main) or **OTHER** (other).
Select **MAIN** for one product and **OTHER** for the other product. Wait and see the MAIN LED or OTHER LED blink.

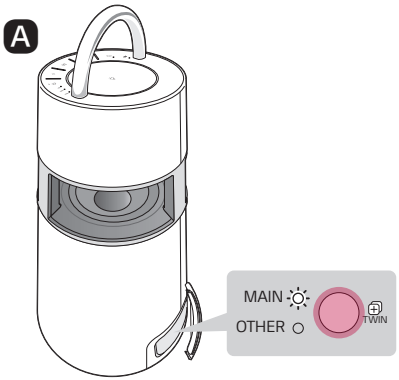

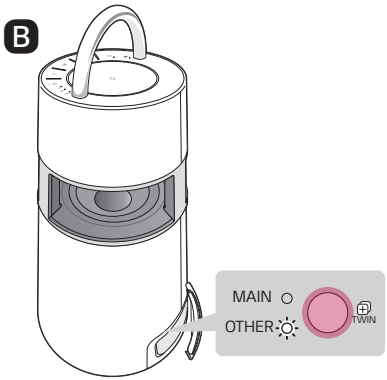

❷ When they are connected to the Wireless Party Link-Twin mode, the MAIN LED and OTHER LED will turn on.

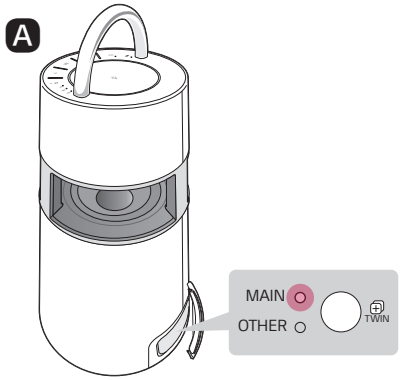

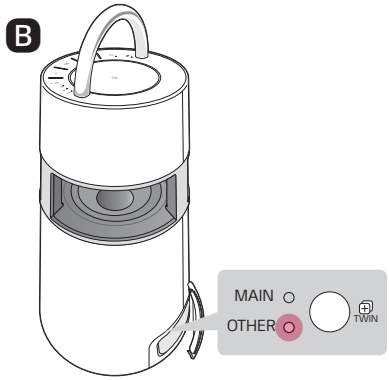

❸ Play the music you want on the MAIN product.

Note

- You can operate only some functions on the OTHER product while using the Wireless Party Link-Twin mode.
- If even one of the two products is connected to the television via **Bluetooth**, you cannot use the Wireless Party Link-Twin mode. In this case, the MAIN and OTHER LEDs will blink twice. To use the Wireless Party Link-Twin mode, disconnect the product and the television before trying to connect the Wireless Party Link-Twin mode again.
- Wireless Party Link-Twin connection is supported only on smartphones. (Wireless Party Link connection may not be connected depending on smartphone specifications or OS.)
- While using the Wireless Party Link-Twin mode, you can connect only one **Bluetooth** device to the MAIN product. The OTHER product cannot be connected to the **Bluetooth** device.
- If one of the two products in connection with the Wireless Party Link-Twin mode is turned off, connected to the television via **Bluetooth**, or the **TWIN** button is pressed, it will be disconnected.

Additional Functions

Resetting the product

You can reset the product when it operates improperly.

1. Open the back cover of the product and use a sharp object to press the **RESET** button to power off the product.
2. Turn on by pressing the **Power** button.

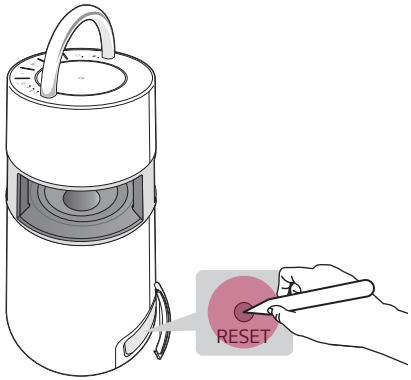

Initialising the Software

It initialises the **Bluetooth** connection and settings of the product.

1. Press and hold the **Function** button on the product for 7 seconds or longer.
2. All function LEDs will blink four times to initialise the **Bluetooth** connection and all settings.

Note

- To use the **Bluetooth** function after initialising the product, connect the **Bluetooth** device again.

How to deactivate the wireless network connection(s).

Set up the [Auto power-on.] to off on **LG XBOOM app** and turn off the product by pressing the **Power** button.

Power Saving Mode

If there is no playback or button input for 15 minutes, the product turns off automatically. You can enable or disable the power saving mode as follows.

Function	How to Use
Enable	Set [Auto Power Management] to [Enable] in the **LG XBOOM app**.
Disable	Set [Auto Power Management] to [Disable] in the **LG XBOOM app**.

Note

- When the power saving function is off, the product turns off only when the **Power** ⏻ button is pressed or the battery is discharged.

Safety Precautions

Safety and Regulatory

CAUTION

RISK OF ELECTRIC SHOCK
DO NOT OPEN

CAUTION: TO REDUCE THE RISK OF ELECTRIC SHOCK DO NOT REMOVE COVER (OR BACK) NO USER-SERVICEABLE PARTS INSIDE REFER SERVICING TO QUALIFIED SERVICE PERSONNEL.

This lightning flash with arrowhead symbol within an equilateral triangle is intended to alert the user to the presence of uninsulated dangerous voltage within the product's enclosure that may be of sufficient magnitude to constitute a risk of electric shock to persons.

The exclamation point within an equilateral triangle is intended to alert the user to the presence of important operating and maintenance (servicing) instructions in the literature accompanying the product.

WARNING:

- TO PREVENT FIRE OR ELECTRIC SHOCK HAZARD, DO NOT EXPOSE THIS PRODUCT TO RAIN OR MOISTURE.
- Do not install this equipment in a confined space such as a book case or similar unit.

CAUTION:

- Do not use high voltage products around this product. (ex. Electrical swatter) This product may malfunction due to electrical shock.
- No naked flame sources, such as lighted candles, should be placed on the apparatus.
- Do not block any ventilation openings. Install in accordance with the manufacturer's instructions. Slots and openings in the cabinet are provided for ventilation and to ensure reliable operation of the product and to protect it from over heating. The openings should never be blocked by placing the product on a bed, sofa, rug or other similar surface. This product shall not be placed in a built-in installation such as a bookcase or rack unless proper ventilation is provided or the manufacturer's instruction has been adhered to.
- The apparatus should not be exposed to water (dripping or splashing) and no objects filled with liquids, such as vases, should be placed on the apparatus.
- For safety marking information including product identification and supply ratings, please refer to the main label on the bottom or the other surface of the product.
- Be careful to make sure children do not put their hands or any objects into the *speaker duct.
  - * speaker duct: A hole for plentiful bass sound on speaker cabinet. (enclosure)

CAUTION concerning the Power Cord

The Power Plug is the disconnecting device. In case of an emergency, the Power Plug must remain readily accessible.

Check the specification page of this owner's manual to be certain of the current requirements.

Do not overload wall outlets. Overloaded wall outlets, loose or damaged wall outlets, extension cords, frayed power cords, or damaged or cracked wire insulation are dangerous. Any of these conditions could result in electric shock or fire. Periodically examine the cord of your device, and if its appearance indicates damage or deterioration, unplug it, discontinue use of the device, and have the cord replaced with an exact replacement part by an authorised service centre.

Protect the power cord from physical or mechanical abuse, such as being twisted, kinked, pinched, closed in a door, or walked upon. Pay particular attention to plugs, wall outlets, and the point where the cord exits the device.

For models using an adapter

Only use the AC adapter supplied with this device. Do not use a power supply from another device or another manufacturer. Using any other power cable or power supply may cause damage to the device and void your warranty.

For models using a Laser device

This product employs a Laser System. To ensure proper use of this product, please read this owner's manual carefully and retain it for future reference. Shall the unit require maintenance, contact an authorised service centre. Use of controls, adjustments or the performance of procedures other than those specified herein may result in hazardous radiation exposure. To prevent direct exposure to laser beam, do not try to open the enclosure.

For models using a battery

This device is equipped with a portable battery or accumulator.

CAUTION: Risk of fire or explosion if the battery is replaced by an incorrect type.

For models using a built-in battery

Do not store or transport at pressures lower than 11.6 kPa and at above 15,000 m altitude.

- replacement of a battery with an incorrect type that can defeat a safeguard (for example, in the case of some lithium battery types);
- disposal of a battery into fire or a hot oven, or mechanically crushing or cutting of a battery, that can result in an explosion;
- leaving a battery in an extremely high temperature surrounding environment that can result in an explosion or the leakage of flammable liquid or gas; and
- a battery subjected to extremely low air pressure that may result in an explosion or the leakage of flammable liquid or gas.

Symbols			
~	Alternating current (AC).	⏻	Standby power state.
⎓	Direct current (DC).	I	The power is turned on.
⧈	This is a class II equipment.	ϟ	Danger voltage.

Things to Check before Reporting Malfunction

Troubleshooting

If you experience the following symptoms while using the product, please check them again. They may not be malfunctions.

Symptom	Cause and Solution
Power is not supplied.	• The battery is discharged. Recharge the battery. - Charge the product by connecting the power cord to the power input terminal.
There is no sound or the sound is distorted.	• The volume of product or the connected **Bluetooth** device may be set to the minimum. Adjust the volume of product or the connected **Bluetooth** device to the appropriate level. • Using an external device with the maximised sound may distort the sound. Lower the volume of the external device to use.
The USB storage device is not recognised.	• The product may not support the file system of the USB storage device. Format the USB storage device and reconnect it. When formatting, check the supported USB storage device format available on the product and select an appropriate file system. (➞ See "Connecting to USB" on page 17.)
Bluetooth connection failed.	• Check if the **Bluetooth** setting is enabled. • Turn off the **Bluetooth** setting and on again on the **Bluetooth** device. • Make sure there are no obstacles between product and the **Bluetooth** device. • **Bluetooth** pairing (connecting) may fail depending on the **Bluetooth** device type and the surrounding environment.

The product does not operate normally.	• Battery discharge may cause the **Bluetooth** information to be deleted. If the product's power supply is blocked, previous settings may not be saved. • Use this product in a place where the temperature and humidity are not too high or low. If the problem continues, contact LG Electronics' Customer Service Centre. • If a problem occurs while charging the battery of the product, the power LED alternates between red and orange and charging stops. Unplug the power from the outlet.
The above solutions do not work.	• Use a sharp object such as a pin to press the **RESET** RESET button. (→ See "Resetting the product" on page 25.)

Appendix

Product Specifications

General	
Power	Refer to the main label. Built-in rechargeable battery
Power consumption	Refer to the main label.
	Networked standby: 0.5 W (If all network ports are activated.)
Dimensions (W x H x D)	Approx. 247.5 mm x 514.0 mm x 247.5 mm
Temperature	5 °C - 40 °C
Humidity	5 % - 60 % RH

Input	
AUX. IN	1.0 Vrms (3.5 mm stereo terminal) × 1
USB	5 V ⎓ 500 mA

Battery	
Battery capacity	Li-ion 7.4 V, 3900 mAh
Operating time	10 hours Operation time may vary depending on the battery or operation status.
Charging time	5 hours Charging time may vary depending on the battery or operation status.

Amplifier (RMS output)	
Total	120 W RMS

- Design and specifications are subject to change without notice.

Registered Trademarks and Licenses

All trademarks and trade names are owned by their respective owners.

The **Bluetooth®** word mark and logos are registered trademarks owned by the **Bluetooth** SIG, Inc. and any use of such marks by LG Electronics is under license.

Other trademarks and trade names are those of their respective owners.

"Made for iPhone," and "Made for iPod" mean that an electronic accessory has been designed to connect specifically to iPhone, or iPod, respectively, and has been certified by the developer to meet Apple performance standards. Apple is not responsible for the operation of this device or its compliance with safety and regulatory standards. Please note that the use of this accessory with iPhone or iPod may affect wireless performance.

The system is compatible with the latest iOS. Depending on your iPhone/iPod software version, you may not control your iPhone/iPod from the unit.

Handling the Product

When shipping the Product

Please save the original shipping carton and packing materials. If you need to ship the product, for maximum protection, re-pack the product as it was originally packed at the factory.

Keeping the exterior surfaces clean

- Do not use volatile liquids such as insecticide spray near the product.
- Wiping with strong pressure may damage the surface.
- Do not leave rubber or plastic products in contact with the product for a long period of time.

Cleaning the product

To clean the product, use a soft, dry cloth. If the surfaces are extremely dirty, use a soft cloth lightly moistened with a mild detergent solution. Do not use strong solvents such as alcohol, benzine, or thinner, as these might damage the surface of the product.

LG

Life's Good