Scan the QR code to see the manual.

OWNER'S MANUAL

FRIDGE & FREEZER

Before beginning installation, read these instructions carefully. This will simplify installation and ensure that the product is installed correctly and safely. Leave these instructions near the product after installation for future reference.

ENGLISH

MFL67227332
Rev.09_082726

www.lg.com

Copyright © 2024-2026 LG Electronics. All Rights Reserved

TABLE OF CONTENTS

This manual may contain images or content that may be different from the model you purchased.

This manual is subject to revision by the manufacturer.

SAFETY INSTRUCTIONS

READ ALL INSTRUCTIONS BEFORE USE 4
WARNING 4
CAUTION 10
CARING FOR THE ENVIRONMENT 12

INSTALLATION

Before Installation 13
Removing the Handle 14
Removing the Door and Drawer 14
Connecting the Water Line 18
Levelling and Door Alignment 20
Turning on the Power 21
Moving the Appliance for Relocation 22

OPERATION

Before Use 23
Product Features 25
Control Panel 32
Ice and Water Dispenser 35
Automatic Icemaker 36
InstaView 39
Door in Door 40
Drawers 40
Glide'N'Serve 41
Shelf 42
Door Basket 43
Durabase 43

SMART FUNCTIONS

LG ThinQ Application 44
Smart Diagnosis 45

MAINTENANCE

Cleaning 47
Water Filter 48

TROUBLESHOOTING

Before Calling for Service.....51

APPENDIX

Information.....58

SAFETY INSTRUCTIONS

READ ALL INSTRUCTIONS BEFORE USE

The following safety guidelines are intended to prevent unforeseen risks or damage from unsafe or incorrect operation of the appliance.

The guidelines are separated into **'WARNING'** and **'CAUTION'** as described below.

Safety Messages

⚠	This symbol is displayed to indicate matters and operations that can cause risk. Read the part with this symbol carefully and follow the instructions in order to avoid risk.
⚠	**WARNING** This indicates that the failure to follow the instructions can cause serious injury or death.
⚠	**CAUTION** This indicates that the failure to follow the instructions can cause the minor injury or damage to the product.

About This Manual

Read the technical instructions before installing this appliance.

Read the instructions for use before using this appliance.

WARNING

⚠ WARNING

To reduce the risk of explosion, fire, death, electric shock, injury or scalding to persons when using this product, follow basic precautions, including the following:

Technical Safety

- This appliance is not intended for use by persons (including children) with reduced physical, sensory or mental capabilities, or lack of experience and knowledge, unless they have been given supervision or instruction concerning use of the appliance by a person responsible for their safety. Children should be supervised to ensure that they do not play with the appliance.
- This appliance is intended to be used in household and similar applications such as:
  - staff kitchen areas in shops, offices and other working environments;
  - farm houses and by clients in hotels, motels and other residential type environments;
  - bed and breakfast type environments;
  - catering and similar non-retail applications.
- This refrigerating appliance is not intended to be used as a built-in appliance.
- This appliance is not for use in portable or mobile installations, such as marine or RV uses, where it will be in motion while operating.

This symbol alerts you to flammable materials that can ignite and cause a fire if you do not take care.

- This appliance contains a small amount of isobutane refrigerant (R600a), but it is also combustible. When transporting and installing the appliance, care should be taken to ensure that no parts of the refrigerating circuit are damaged.
- The refrigerant and insulation blowing gas used in the appliance require special disposal procedures. Consult with service agent or a similarly qualified person before disposing of them.
- Do not damage the refrigerant circuit.
- If the power cord is damaged or the hole of the outlet socket is loose, it must be replaced. Do not use the power cord and contact an authorized service centre in order to avoid a hazard.

- Do not locate multiple portable socket-outlets or portable power supplies at the rear of the appliance.
- Securely plug the power plug in the outlet socket after completely removing any moisture and dust.
- Never unplug the appliance by pulling on the power cable. Always grip the power plug firmly and pull straight out from the outlet socket.
- Keep ventilation openings, in the appliance enclosure or in the built-in structure, clear of obstruction.
- Do not store explosive substances such as aerosol cans with a flammable propellant in this appliance.
- Do not tilt the appliance to pull or push it when transporting.
- When positioning the appliance, ensure the supply cord is not trapped or damaged.
- Do not use mechanical devices or other means to accelerate the defrosting process.
- Do not use a hair drier to dry the inside of the appliance or place a candle inside to remove the odours.
- Do not use electrical appliances inside the food storage compartments of the appliance, unless they are of the type recommended by the manufacturer.
- Make sure not to get a body part such as a hand or foot stuck while moving the appliance.
- Disconnect the power cord before cleaning the appliance interior or exterior.
- Do not spray water or inflammable substances (toothpaste, alcohol, thinner, benzene, flammable liquid, abrasive, etc.) over the interior or exterior of the appliance to clean it.
- Do not clean the appliance with brushes, cloths or sponges with rough surfaces or which are made of metallic material.
- Only qualified service personnel from LG Electronics service centre should disassemble, repair, or modify the appliance. Contact an LG Electronics customer information centre if you move and install the appliance in a different location.

Risk of Fire and Flammable Materials

- If a leak is detected, avoid any naked flames or potential sources of ignition and air the room in which the appliance is standing for several minutes. In order to avoid the creation of a flammable gas air mixture if a leak in the refrigerating circuit occurs, the size of the room in which the appliance is used should correspond to the amount of refrigerant used. The room must be 1 m^2 in size for every 8 g of R600a refrigerant inside the appliance.
- Refrigerant leaking out of the pipes could ignite or cause an explosion.
- The amount of refrigerant in your particular appliance is shown on the identification plate inside the appliance.

Installation

- This appliance should only be transported by two or more people holding the appliance securely.
- Install the appliance on a firm and level floor.
- Do not install the appliance in a damp and dusty place. Do not install or store the appliance in any outdoor area, or any area that is subject to weathering conditions such as direct sunlight, wind, rain, or temperatures below freezing.
- Do not place the appliance in direct sunlight or expose it to the heat from heating appliances such as stoves or heaters.
- Be careful not to expose the rear of the appliance when installing.
- Install the appliance in a place where it is easy to unplug the power plug of the appliance.
- Be careful not to let the appliance door fall during assembly or disassembly.
- Be careful not to pinch, crush, or damage the power cable during assembly or disassembly of the appliance door.
- Be careful not to point the power plug up or let the appliance lean against the power plug.
- Do not connect a plug adapter or other accessories to the power plug.

- Do not modify or extend the power cable.
- Ensure that the outlet socket is properly grounded, and that the earth pin on the power cord is not damaged or removed from the power plug. For more details on grounding, inquire at an LG Electronics customer information centre.
- This appliance is equipped with a power cord having an equipment-grounding conductor and a grounding power plug. The power plug must be plugged into an appropriate outlet socket that is installed and grounded in accordance with all local codes and ordinances.
- Never start up an appliance showing any signs of damage. If in doubt, consult your dealer.
- Dispose of all packaging materials (such as plastic bags and styrofoam) away from children. The packaging materials can cause suffocation.
- Do not plug the appliance into a multi socket adapter which does not have a power cable (mounted).
- The appliance should be connected to a dedicated power line which is separately fused.
- Do not use a multi socket outlet which is not properly grounded (portable). In case of using a properly-grounded multi socket outlet (portable), use the multi socket outlet with the current capacity of the power cord rating or higher and use the multi socket outlet only for the appliance.

Operation

- Do not use the appliance for any purpose (storage of medical or experimental materials or shipping) other than any domestic household food storage use.
- If water penetrates electrical parts of the appliance, disconnect power plug and contact an LG Electronics customer information centre.
- Unplug the power plug during a severe thunderstorm or lightning or when not in use for a long period of time.

- Do not touch the power plug or the appliance controls with wet hands.
- Do not bend the power cable excessively or place a heavy object on it.
- Immediately unplug the power plug and contact an LG Electronics customer information centre if you detect a strange sound, odour, or smoke coming from the appliance.
- Do not place hands or metallic objects inside the area emitting the cold air, cover or heat releasing grille on the back.
- Do not apply excessive force or impact to the back cover of the appliance.
- Be careful of nearby children when you open or close the appliance door. The door may bump the child and cause injury.
- Avoid the danger of children getting trapped inside the appliance. A child trapped inside the appliance can cause suffocation.
- Do not put animals, such as pets into the appliance.
- Do not place heavy or fragile objects, containers filled with liquid, combustible substances, flammable objects (such as candles, lamps, etc.), or heating devices (such as stoves, heaters, etc.) on the appliance.
- Do not place any electronic appliance (such as heater and mobile phone) inside the appliance.
- If there is a gas leakage (isobutane, propane, natural gas, etc.), do not touch the appliance or power plug and ventilate the area immediately. This appliance uses a refrigerant gas (isobutane, R600a). Although it uses a small amount of the gas, it is still combustible gas. Gas leakage during appliance transport, installation or operation can cause fire, explosion or injury if sparks are caused.
- Do not use or store flammable or combustible substances (ether, benzene, alcohol, chemical, LPG, combustible spray, insecticide, air freshener, cosmetics, etc.) near the appliance.
- This appliance incorporates an earth connection for functional purposes.
- Connect to potable water supply only.

- If connected to a water supply, connect to a potable water supply only.
- Fill with potable water only.
  - If using an icemaker or dispenser water tank, make sure to fill it with potable water only.

Disposal

- When discarding the appliance, remove the door gasket while leaving the shelves and baskets in place and keep children away from the appliance.

CAUTION

⚠ CAUTION

To reduce the risk of minor injury to persons, malfunction, or damage to the product or property when using this product, follow basic precautions, including the following:

Installation

- After unpacking, check the appliance for any damage that may have occurred during transit.
- Wait for at least 3 to 4 hours in order to ensure the refrigerant circuit is fully efficient.
- Move the appliance carefully on sensitive floors to avoid damage to the floor.

Operation

- Do not touch frozen food or the metal parts in the freezer compartment with wet or damp hands. It may cause frostbite.
- Do not place glass containers, bottles or cans (especially those containing carbonated drinks) in the freezer compartment, shelves or ice bucket that will be exposed to temperatures below freezing.

- The tempered glass on the front side of the appliance door or the shelves can be damaged by an impact. If it is broken, do not touch it with hands.
- Do not hang from the appliance doors, storage room, shelf or climb up into it.
- Do not store an excessive amount of water bottles or containers for side dishes on the door baskets.
- Do not open or close the appliance door with excessive force.
- If the hinge of the appliance door is damaged or operates improperly, stop using the appliance and contact an authorized service centre.
- Prevent animals from nibbling on the power cable or water hose.
- Never eat frozen foods immediately after they have been taken out in the freezer compartment.
- Make sure not to get a hand or foot stuck upon opening or closing the appliance door or door in door.

Maintenance

- This appliance is equipped with maintenance-free LED interior light. Do not remove cover or LED lamp in any attempt to repair or change it. Contact an LG Electronics customer information centre.
- Do not clean glass shelves or covers with warm water when they are cold. They may shatter if exposed to sudden temperature changes.
- Do not insert the shelves upside down. The shelves may fall.
- To remove frost from the appliance, contact an LG Electronics customer information centre.
- Dispose of the ice inside the ice bucket in the freezer compartment during an extended power outage.

CARING FOR THE ENVIRONMENT

Disposal of Your Old Appliance

- This crossed-out wheeled bin symbol indicates that waste electrical and electronic products (WEEE) should be disposed of separately from the municipal waste stream.
- Old electrical products can contain hazardous substances so correct disposal of your old appliance will help prevent potential negative consequences for the environment and human health. Your old appliance may contain reusable parts that could be used to repair other products, and other valuable materials that can be recycled to conserve limited resources.
- You can take your appliance to any of the authorised centres for collection. If you want to know an updated list of countries that have this service, visit the page https://www.lg.com/global/take-back-recycling-global-network-south-america

INSTALLATION

Before Installation

Dimensions and Clearances

Too small of a distance from adjacent items may result in the degradation of freezing capability and increased electricity costs. Allow over 50 mm of clearance between the back of the appliance and the wall when installing the appliance.

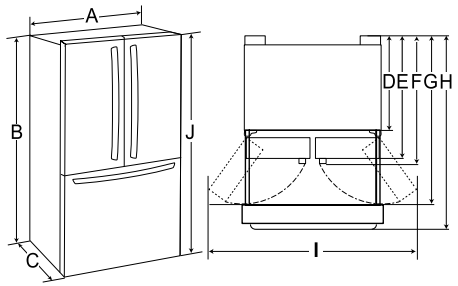

-	Size (mm)			
	Type A	Type B	Type C	Type D
A	836	836	908	908
B	1 743	1 743	1 750	1 750
C	912	849	874	739
D	748	748	764	628
E	849	849	874	739
F	912	849	874	739
G	1 186	1 186	1 240	1 106
H	1 350	1 350	1 406	1 176
I	1 320	1 320	1 442	1 442
J	1 776	1 776	1 785	1 785

NOTE

- You can determine what type of appliance it is by looking at the label inside the appliance.

Ambient Temperature

- The appliance is designed to operate within a limited range of ambient temperatures, depending on the climate zone.
- The internal temperatures could be affected by the location of the appliance, the ambient temperature, the frequency of door opening and so on.
- The climate class can be found on the rating label.

Climate Class	Ambient Temperature Range ºC
SN (Extended Temperate)	+10 - +32
N (Temperate)	+16 - +32
ST (Subtropical)	+16 - +38 / +18 - +38**
T (Tropical)	+10 - +43* / +16 - +43 / +18 - +43**

* Australia, India, Kenya

** Argentina

NOTE

- The appliances rated from SN to T are intended to be used at an ambient temperature between 10 ºC and 43 ºC.

ENGLISH

Accessories

*1 This feature is only available on some models.

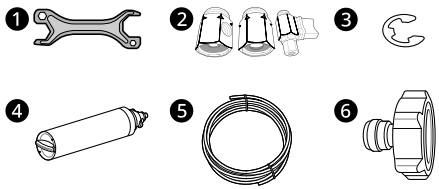

❶ Spanner *1

❷ Tube Connector and Valve*1

❸ C-Clip (Snap Ring)*1

❹ Water Filter

❺ Water Tube*1

❻ Tube Connector*1

Removing the Handle

When moving the appliance through a narrow opening, removing the doors is preferred.

The appearance of the handles may vary from what is shown.

These instructions are for models which ship with the handles assembled. For models shipped with the handles disassembled, follow the instructions included in the handle package.

- Tools Needed
  - Units shipped with assembled handles:

    2.38 mm (3/32 in.), 3.18 mm (1/8 in.), 6.35 mm (1/4 in.) Allen wrenches
  - Units shipped with disassembled handles:

    2.38 mm (3/32 in.), 6.35 mm (1/4 in.) Allen wrenches

⚠ CAUTION

- When removing or refitting the appliance handle, grasp the handle firmly to avoid dropping it.
- Make sure that there is not a gap between the door and handle after assembling the handle.

Removing the Fridge Handle

1 Loosen the set screws ❶ with a 2.38 mm (3/32 in.) Allen wrench and remove the handle.

2 Loosen the mounting fasteners ❷ that connect to the fridge door and handle using a 6.35 mm (1/4 in.) Allen wrench, and remove the mounting fasteners.

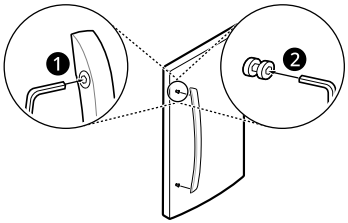

Refitting the Fridge and Drawer Handle

Refit the handle in the reverse sequence of their removal once the appliance has been passed through all access doors.

Removing the Door and Drawer

If your entrance door is too narrow for the appliance to pass through, remove the appliance doors and pass the appliance laterally.

⚠ WARNING

- Disconnect the power cord, house fuse or circuit breaker before installing, removing the doors, or cleaning the appliance. Failure to follow these instructions may result in death, fire or electric shock.

Removing the Left Fridge Door

1 The water supply is connected to the upper right part of the rear surface of the appliance. Remove the ring in the joint area. Hold the

water supply connection and gently push the collet ❶ to detach the water supply line as shown.

- Connections may vary by model.

*1 This feature is only available on some models.

Type A*1	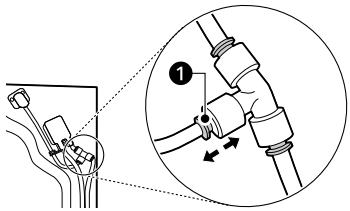
Type B*1	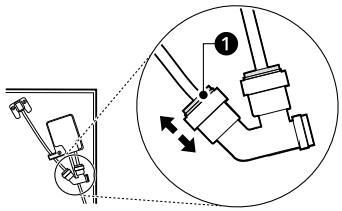
Type C*1	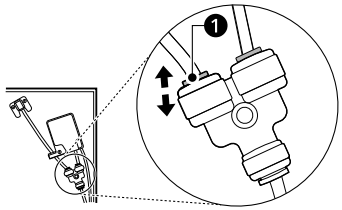
Type D*1	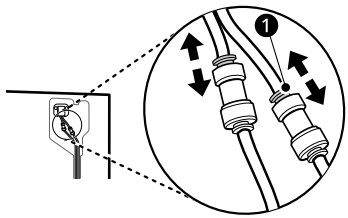

NOTE

- Disassembling/Assembling the Water Lines

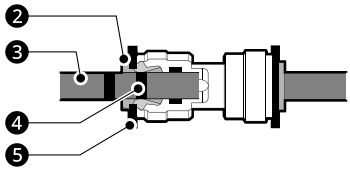

❷ Collet ❸ Tube ❹ Insert line ❺ Clip

2 Remove the screw ❻ from the hinge cover at the top of the appliance. Lift the hook (not visible), located at the bottom of the front side of the cover ❼ with a flat-head screwdriver.

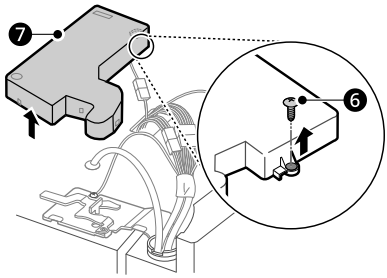

3 Remove the cover and pull out the tube ❽. Disconnect all wire harnesses ❾. Unscrew the earth wire ❿.

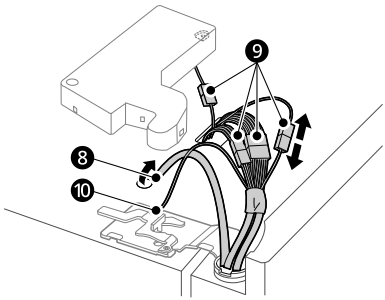

ENGLISH

NOTE

- The number of wire harnesses may vary depending on the model.

4 Rotate the hinge lever ⓫ counterclockwise. Lift the top hinge ⓬ free of the hinge lever latch ⓭.

⚠ CAUTION

- When lifting the hinge free of the latch, be careful that the door does not fall forward.

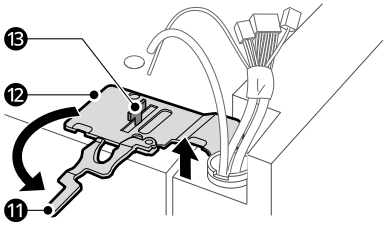

5 Lift the door from the middle hinge pin and remove the door.

⚠ CAUTION

- Place the door, inside facing up, on a nonscratching surface.

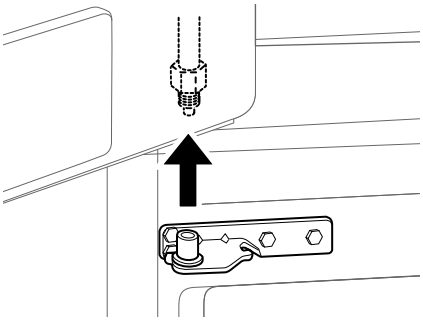

Removing the Right Fridge Door

NOTE

- The number of wire harnesses may vary depending on the model.
- Earth wire is only present on some models.

1 Remove the top hinge cover screw ❶. Lift the hook (not visible), located at the bottom of the front side of the cover ❷, with a flat-head screwdriver. Remove the cover.

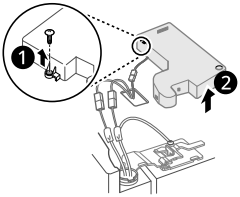

2 Detach all the wire harnesses ❸. Unscrew the earth wire ❹.

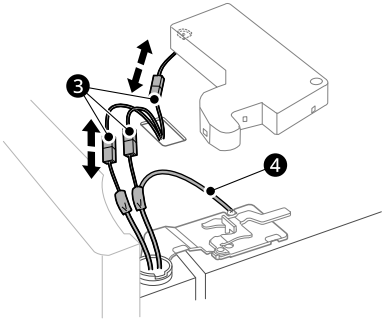

3 Rotate the hinge lever ❺ clockwise. Lift the top hinge ❻ free of the hinge lever latch ❼.

⚠ CAUTION

- When lifting the hinge free of the latch, be careful that the door does not fall forward.

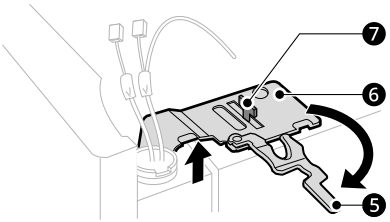

4 Lift the door from the middle hinge pin and remove the door.

⚠ CAUTION

- Place the door, inside facing up, on a nonscratching surface.

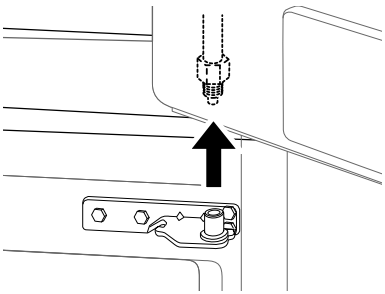

Removing the Freezer Drawer

⚠ WARNING

- To prevent accidents, keep children and pets away from the drawer. Do not leave the drawer open.

⚠ CAUTION

- Do not sit or stand on the freezer drawer.
- When you lay the drawer down, be careful not to damage the floor.
- Be careful of sharp hinges on both sides of the drawer.
- Use two or more people to remove and install the fridge doors and freezer drawer.

1 Pull the drawer open to full extension.

2 Gently lift and pull out the ice bucket.

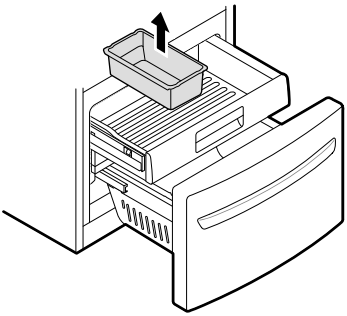

3 Lift the front of the drawer up, then pull it straight out.

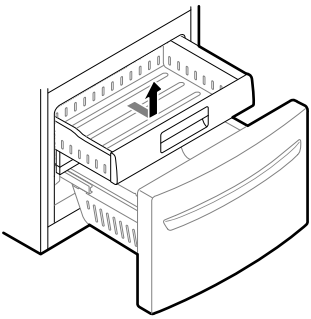

4 Remove the Durabase basket from the rails. Remove the screws from the rails at both ends.

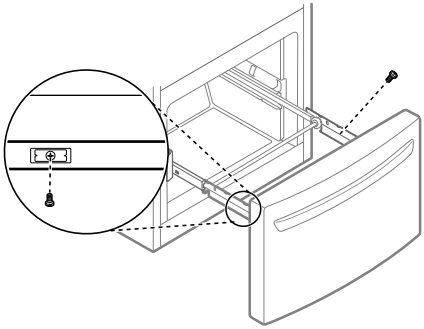

5 Grip both sides of the drawer and pull it up to remove it from the rails.

⚠ CAUTION

- Do not hold the handle when removing or replacing the drawer. The handle may come off, causing personal injury.

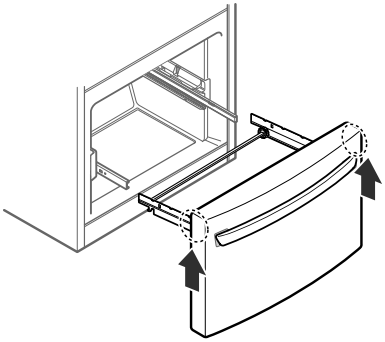

6 Hold both rails and push them in simultaneously.

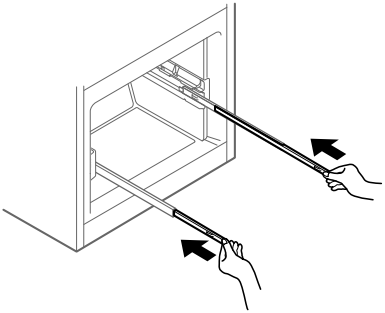

Refitting the Door and Drawer

Refit the door and drawer in the reverse sequence of their removal once the appliance has been passed through all access doors.

Connecting the Water Line

This feature is only available on some models.

Water Supply Requirements

A cold water supply with water pressure between 138 kPa and 827 kPa (1.4-8.4 kgf/cm^2) is required to operate the water dispenser. If the refrigerator is installed in an area with low water pressure (below 138 kPa), you can install a booster pump to compensate for the low pressure.

If a reverse osmosis water filtration system is connected to your cold water supply, the water pressure to the reverse osmosis system needs to be a minimum of 138 kPa to 827 kPa (1.4-8.4 kgf/cm^2)

⚠ WARNING

- Unplug the appliance before carrying out any work on connecting the water line. Failure to do so may cause electric shock.
- Only connect the water line to a cold water supply. Failure to do so may cause the water filter to malfunction. Water hammer (water banging in the pipes) in house plumbing can

cause damage to appliance parts and can lead to water leakage or flooding.

- Connect to potable water supply only.
- Use a new hose when connecting water to the appliance. Do not use old, worn or used hoses.
- Connecting the water line must only be installed by a qualified plumber and in accordance with local legislation and regulations governing water quality.

NOTE

- This water line installation is not covered by the appliance warranty.

Connecting Water to the Appliance

1 Unscrew the metal threaded collar nut at the back of the appliance and place it over one end of the water tube.

2 Firmly push the water tube onto the water inlet valve and tighten up the collar nut.

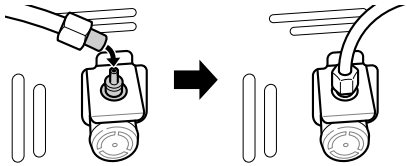

Connecting to the Water Tap

This feature is only available on some models.

1 Push the water tube into the hole of the tap connector supplied in the accessories. The pipe should be held firmly whilst the connector is pushed onto the pipe.

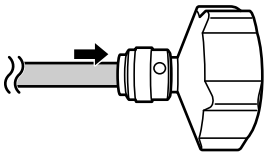

2 Ensure that the rubber washer is fitted to the inside of the tap connector before screwing it onto the tap.

- A separate connector or adaptor may need to be purchased if your tap fitting does not match the thread size of the connector provided.

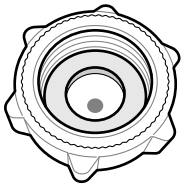

Checking the Water Connection

1 Turn on the water supply and switch on the appliance. Carefully check all fittings for possible leaks due to poorly fitted hoses.

2 Press and hold the **Water Filter** button for three seconds. The new water filter has been activated.

3 Place a cup under the water dispenser to verify that water is flowing through the appliance.

4 Check the connecting tube and joints for leaks once again.

Levelling and Door Alignment

Levelling the Appliance

The appliance has two front levelling legs. Adjust the legs to alter the tilt from front-to-back or side-to-side. If the appliance seems unsteady, or the doors do not close easily, adjust the appliance’s tilt using the instructions below:

1 Turn the levelling leg to the left to raise that side of the appliance or to the right to lower it. It may take several turns of the levelling leg to adjust the tilt of the appliance.

NOTE

- A flare nut wrench works best, but an open-end wrench will suffice. Do not over-tighten.

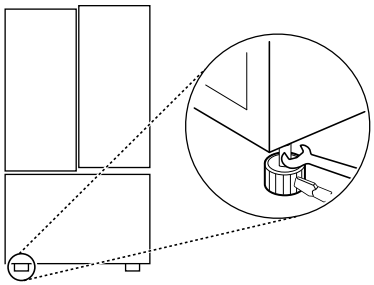

2 Open both doors and check to make sure that they close easily. If the doors do not close easily, tilt the appliance slightly more to the rear by turning both levelling legs to the left. It may take several more turns, and be sure to turn both levelling legs the same amount.

Door Alignment (Standard Door Model)

Both the left and right fridge doors have an adjustable nut, located on the bottom hinge, to raise and lower them to align properly.

If the space between the doors is uneven even after the door baskets are filled, follow the instructions below to align the doors evenly:

Use the spanner (included with the owner's manual) to turn the nut in the door hinge to adjust the height. Turn the nut to the right to raise the door or to the left to lower it.

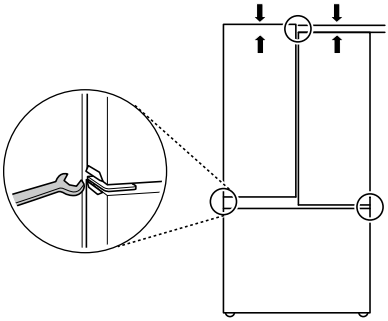

Door Alignment (Door-in-Door Model)

Left Fridge Door

The left fridge door has an adjustable nut, located on the bottom hinge, to raise and lower the door for proper alignment.

If the space between the doors is uneven, follow the instructions below to align the left door:

Use the wrench (included with the owner's manual) to turn the nut in the door hinge to adjust the height. Turn the nut to the right to raise the door or to the left to lower it.

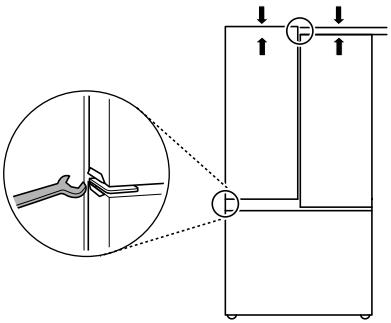

Right Fridge Door

The right fridge door does not have an adjustable nut.

If the space between the doors is uneven, follow the instructions below to align the right door:

1 With one hand, lift up both the inner and outer door sections of the right door to raise them at the middle hinge. (It may be easier to lift it with the doors open.)

2 With the other hand, use pliers to insert the snap ring on the middle hinge of the inner door section as shown. Do not insert the ring on the hinge of the outer door section.

3 Insert additional snap rings until the right door is aligned. (Two snap rings are provided with the unit.)

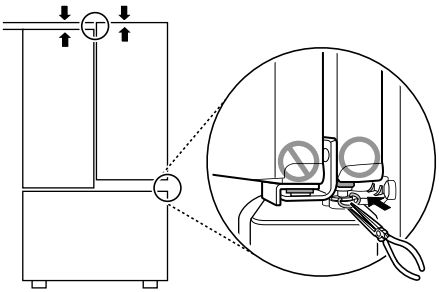

Turning on the Power

Earthing Instructions

This information is applicable only to Peru where an earth connection is required.

It is recommended to install an earth wire to prevent electric shock.

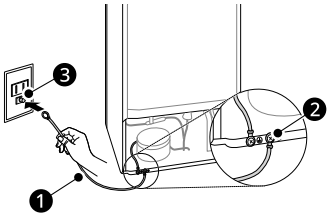

- Connect the earth wire ❶ to the screw ❷ on the back of the appliance and the wall outlet ❸.

⚠ WARNING

- Do not connect the earth wire to gas pipe, water pipe, water tap, telephone earth wire, and lightining rod.

NOTE

- When you install the appliance in a humid or wet location, you must install the earth wire. You are obligated by law to install a circuit breaker in addition to the earth wire. Make sure your appliance is properly installed and earthed by a qualified technician.
- Consult with your retailer or a qualified technician before installing an earth wire. You may be charged for the installation.

Connecting the Appliance

To turn on the appliance, connect the power plug into the outlet socket. Do not double up with other appliances on the same outlet.

NOTE

- After connecting the power supply cord (or plug) to the outlet, wait enough time before you put food into the appliance. If you add food before the appliance has cooled completely, your food may spoil. Make sure you have removed any clear protective film where it has been applied to the door.

NOTE

- To turn off the appliance, disconnect the power plug from the outlet socket.

Moving the Appliance for Relocation

Moving the Appliance

1 Remove all food from inside the appliance.

2 Fix the power plug.

- Models with a power plug hook:

  Pull the power plug out, insert and fix it into the power plug hook at the rear or on top of the appliance.

- Models without a power plug hook:

  Pull the power plug out and fix the power supply cable with a tape to the side of the appliance where the power socket is located at the installation site.

3 Tape parts such as shelves and the door handle to prevent from falling off while moving the appliance.

4 Move the appliance with more than two people carefully. When transporting the appliance over a long distance, keep the appliance upright.

⚠ CAUTION

- Move the appliance carefully on sensitive floors to avoid damage to the floor.
  - Use cardboard, floor mat or carpet to prevent scratches on the floor when installing or moving the appliance.
  - Do not move the appliance in zigzags.

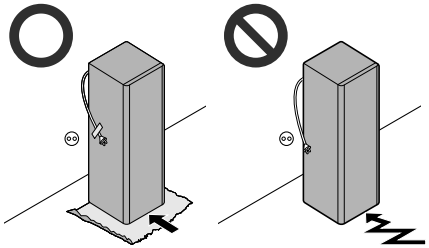

5 After installing the appliance, connect the power plug into a mains outlet socket and switch it on.

OPERATION

Before Use

Notes for Operation

- Users should keep in mind that frost can form if the door is not closed completely or if the humidity is high during the summer.
- Ensure there is sufficient space between food stored on the shelf or door basket to allow the door to close completely.
- Opening the door for long periods can cause a significant increase of the temperature in the compartments of the appliance.
- If the refrigerating appliance is left empty for long periods, switch off, defrost, clean, dry, and leave the door open to prevent mould developing within the appliance.
- To avoid cross-contamination, do not store temperature sensitive food.
- Do not use wooden crates when moving the appliance. It can make low performance.
- Use the baskets properly. Misuse or absence may lower the performance of the appliance.
- Note that a temperature rise after defrosting has a permissible range in the appliance specifications. If you wish to minimise the impact on the food storage due to a temperature rise, seal or wrap the stored food in several layers.

Door Open Alarm

This feature is only available on some models.

The alarm sounds if the door is left open or not completely closed.

NOTE

- Contact the LG Electronics customer information centre if the alarm sound continues even after closing all doors.

Failure Detection

The appliance can automatically detect problems during the operation.

NOTE

- If a problem is detected, the appliance may not operate and an error code is displayed even when any button is pressed.
- If an error code is indicated on the display, do not turn off the power. Immediately contact the LG Electronics customer information centre and report the error code. If you turn off the power, the repair technician from the our information centre may have difficulty finding the problem.

Suggestion for Energy Saving

- For the most efficient use of energy, keep all inner parts (e.g. door baskets, drawers and shelves) on their original location. Altering their positions may result in less efficient energy consumption or performance.
- Ensure there is sufficient space between stored foods. This allows cold air to be circulated evenly and lowers electricity bills.
- Store hot food only after it has cooled in order to prevent dew or frost.
- When storing food in the freezer compartment, set the freezer temperature lower than the temperature indicated on the food.
- Do not set the temperature of the appliance lower than needed.
- Do not put food near the temperature sensor of the fridge compartment. Keep a distance of at least 3 cm from the sensor.

Storing Foods Effectively

- Food may freeze or spoil if stored at the wrong temperature. Set the refrigerator to the correct temperature for the food being stored.

- Store frozen food or refrigerated food inside sealed containers.
- Check the expiration date and label (storage instructions) before storing food in the appliance.
- Do not store food for a long period of time if it spoils easily at a low temperature.
- Do not place unfrozen food in direct contact with food that is already frozen. It could be necessary to reduce the quantity to be frozen if freezing every day is anticipated.
- Place the refrigerated food or frozen food in each fridge or freezer compartment immediately after purchasing.
- Store raw meat and fish in suitable containers in the refrigerator, so that it is not in contact with or drip onto other food.
- Refrigerated foods and other food items can be stored on top of the vegetable drawer.
- Avoid refreezing any food which has been completely thawed. Freezing any food which has been completely thawed again will lower its taste and nutrition.
- Do not overfill the appliance. Cold air can not circulate properly if the appliance is overfilled.
- Cool hot food before storing. If too much hot food is placed inside, the internal temperature of the appliance can increase and negatively affect other foods stored in the appliance.
- If you set an excessively low temperature for food, it may become frozen. Do not set a temperature lower than the required temperature for the food to be stored correctly.
- If there are chill compartments in the appliance, do not store vegetables and fruits with higher moisture content in the chill compartments as they may freeze due to the lower temperature.
- In the event of a blackout, call the electricity company and ask how long it is going to last.
  - You should avoid door openings while the power is off.
  - When the power supply gets back to normal, check the condition of the food.

Maximum Freezing Capacity

- For maximum freezing capacity, set the freezer temperature to the coldest temperature setting.
- **Express Freeze** function will allow the freezer to reach its maximum freezing capacity. This generally takes up to 24 hours and automatically switches off.
- **Express Freeze** must be switched on when fresh products are placed in the freezer compartment.
- To freeze food items quickly, store the food in the center of pullout drawer. Food items will freeze most quickly in the drawer.
- To get better air circulation, insert all inner parts like baskets, drawers, and shelves.

Product Features

The appearance or components of the appliance may differ from model to model.

Exterior

*1 This feature is only available on some models.

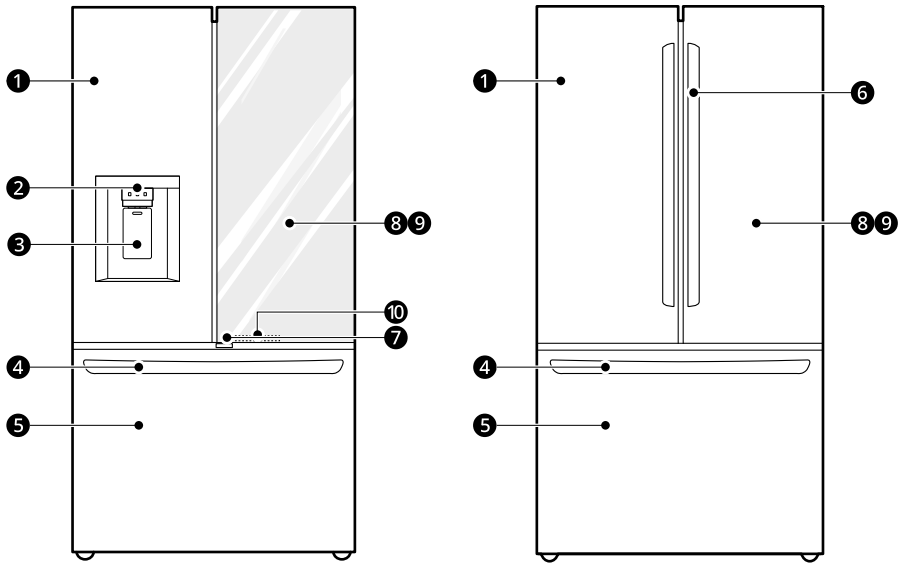

❶ **Fridge**

Fresh food compartment

❷ **Dispenser Control Panel***1

Sets the the dispenser mode.

❸ **Filtered Water and Ice Dispenser***1

Dispenses purified water and ice.

❹ **Freezer Handle***1

Opens and closes the freezer drawer.

❺ **Freezer**

Frozen food compartment

❻ **Fridge Handle***1

Opens and closes the fridge door.

❼ **Door Button***1

Opens the **Door in Door** Compartment.

❽ **Door in Door***1

The **Door in Door** is a double layered door system. It can be opened individually or together with the main door. You can conveniently locate and access your favourite snacks or food items.

❾ **InstaView***1

Knock twice on the glass to turn the LED light inside the **InstaView** on or off.

❿ **LED Light***1

LED lights up when the freezer drawer is opened.

Interior

*1 This feature is only available on some models.

Standard Door

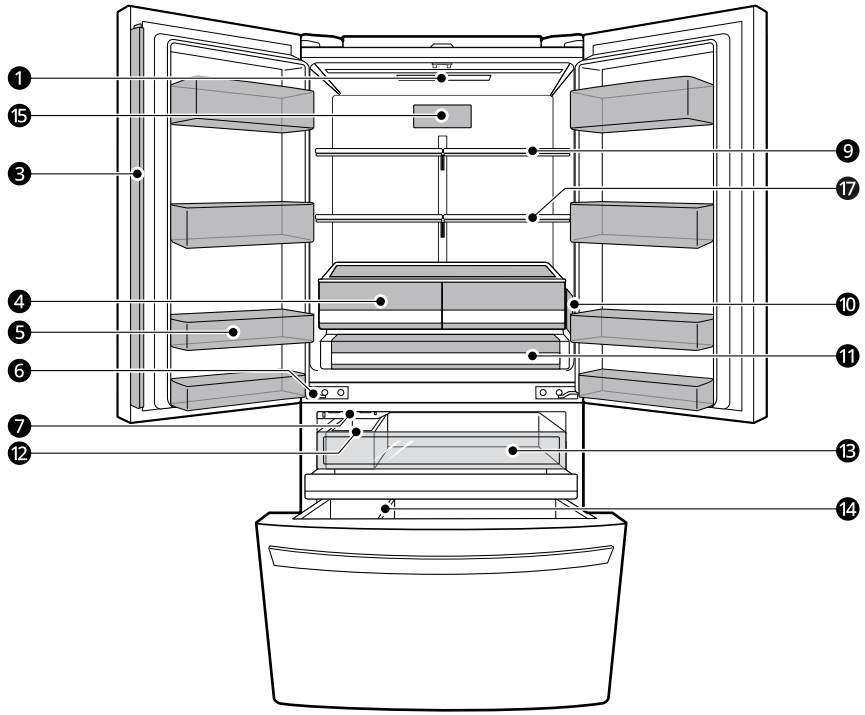

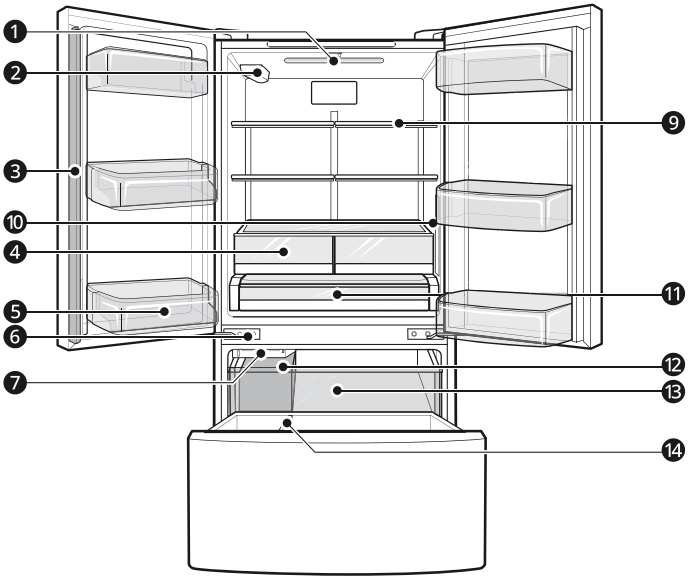
1
2
3
10
4
5
6
7
9
11
12
13
14

Standard Door / InstaView Door

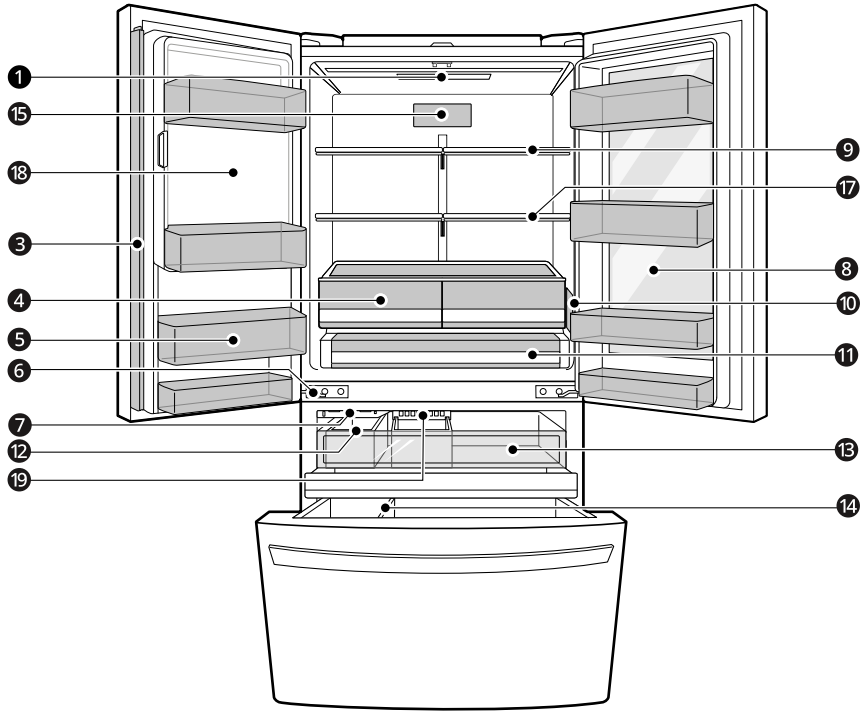

InstaView Door in Door

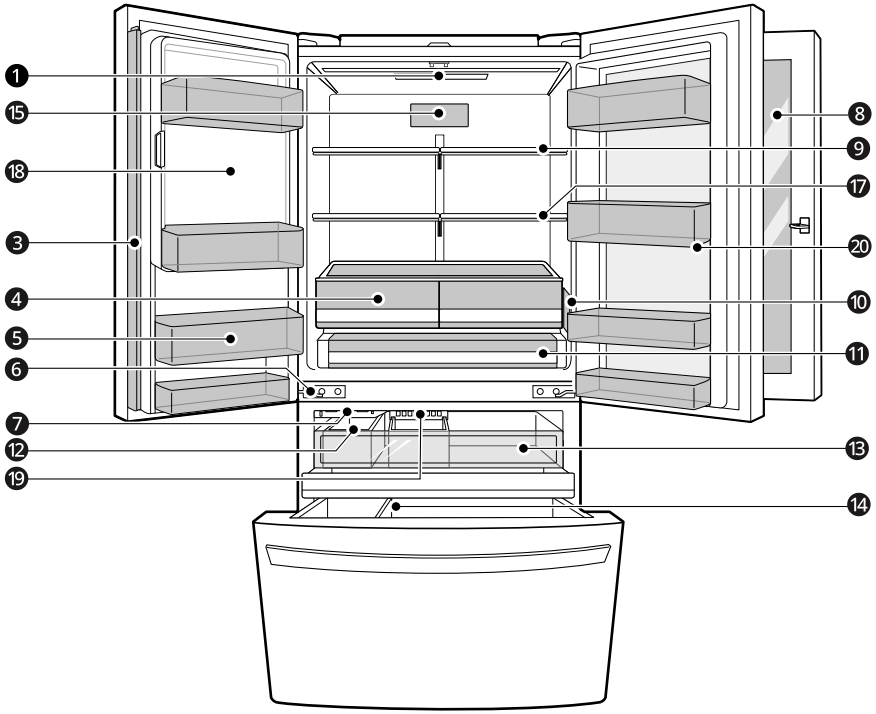

Door in Door / InstaView Door in Door

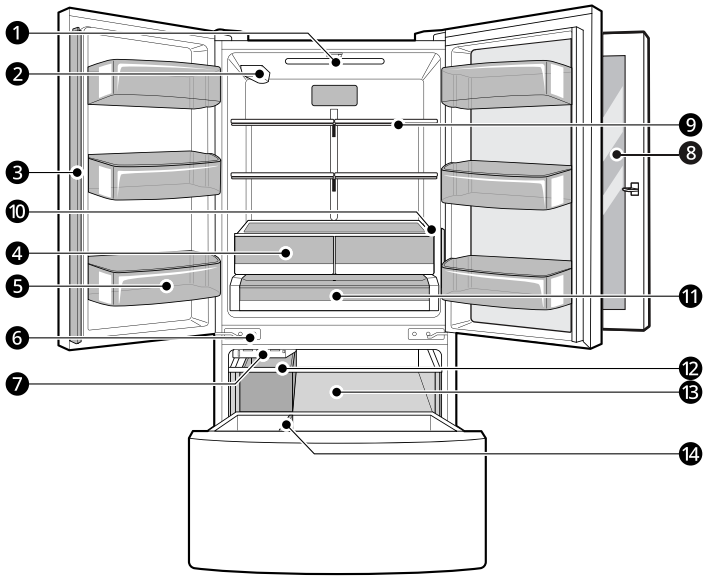

❶ **LED Interior Lighting**

Lights up the inside of the fridge.

❷ **Water Filter**[*1]

Purifies water.

Replace the water filter every six months. See the Replacing the Water Filter section in this manual for details.

❸ **Door Mullion**

Prevents the cold air of the fridge from leaking.

⚠ CAUTION

- To reduce the risk of scratching the door or breaking the center door mullion, make sure that the refrigerator door mullion is always folded in.

❹ **Humidity Controlled Crisper**[*1]

Helps vegetables and fruit to stay crisp and controls humidity.

❺ **Fixed Door Basket**

Store chilled food or drinks.

❻ **Auto-Closing Hinge**

The appliance doors and freezer drawer close automatically when pushed slightly. (The door only closes automatically when it is open at an angle of less than 30°.)

❼ **Automatic Icemaker A (Freezer)**[*1]

Produces and stores ice automatically in the freezer compartment.

❽ **Instaview**[*1]

Knock twice on the glass to turn the LED light inside the **InstaView** on or off.

❾ **Adjustable Fridge Shelf**

The fridge shelves are adjustable to meet individual storage needs

❿ **Control Panel**

Sets the fridge and freezer temperatures.

⓫ **Glide'N'Serve**[*1]

Store food items at a different temperature than the regular fridge area.

⓬ **Ice Bucket**[*1]

Stores ice produced by the automatic icemaker.

⓭ **Pullout Drawer**

Provides extra storage within the freezer compartment.

⓮ **Durabase and Durabase Divider**

Provides storage for large food items.

⓯ **Air Filter**[*1]

Reduces odours inside the fridge compartment.

⓰ **Water Dispenser**[*1]

Dispenses purified water.

⓱ **Folding Shelf**[*1]

Shelf is adjustable to meet individual storage needs.

⓲ **In-Door Icemaker (Refrigerator)**[*1]

This is where ice is automatically produced and stored.

⓳ **Automatic Icemaker B (Freezer)**[*1]

Produces and stores ice automatically in the freezer compartment.

⓴ **Door in Door Compartment**[*1]

A convenient storage area for frequently-used items that require easy access.

Control Panel

The actual control panel may differ from model to model.

Control Panel and Functions

*1 This feature is only available on some models.

Control Panel

Type A

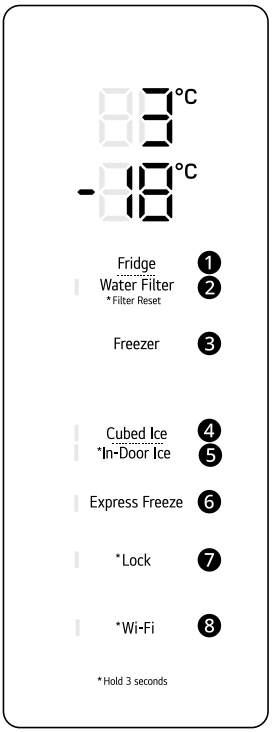

Type B

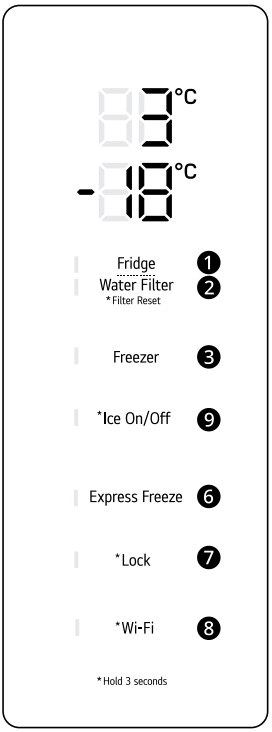

Type C

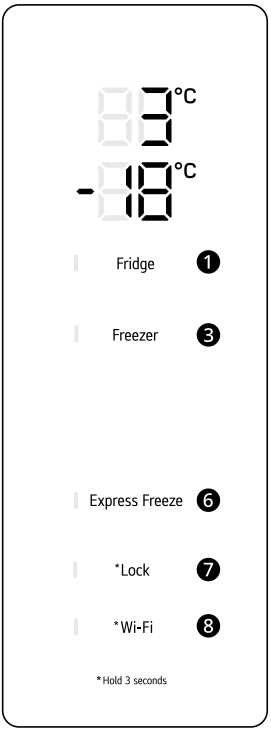

❶ **Fridge**

Press this button repeatedly to select a desired temperature between 1 °C and 7 °C.

- The default fridge temperature is 3 °C.

❷ **Water Filter***1

Replace the water filter when the indicator lights up.

❸ **Freezer**

Press this button repeatedly to select a desired temperature between -23 °C and -15 °C.

- The default freezer temperature is -18 °C.

❹ **Cubed Ice***1

Press the **Cubed Ice** button to turn the icemaker On/Off.

❺ **In-Door Ice***1

Press and hold the **In-Door Ice** button for 3 seconds to turn the **In-Door Ice** icemaker On/Off.

❻ **Express Freeze**

This function can quickly freeze a large amount of ice or frozen foods.

- Press the **Express Freeze** button to activate the function for 24 hours. The function automatically shuts off after 24 hours.
- This function is enabled and disabled in turn each time you press the button.
- This function automatically terminates after a specific period has passed.

❼ **Lock**

The lock function disables every other button on the display.

- To lock the control panel buttons, press and hold the **Lock** button for 3 seconds until indicator light turns on and the function is activated.
- To disable the function, press and hold the **Lock** button for 3 seconds until the indicator light turns off and the function is deactivated.

❽ **Wi-Fi**

This button allows the appliance to connect to a home Wi-Fi network. Refer to Smart Functions for information on the initial setup of the **LG ThinQ** application.

❾ **Ice On/Off**[*1]

Press and hold the **Ice On/Off** button for 3 seconds to turn the automatic icemaker On/Off.

❿ **Cleaning Time**[*1]

This function stops all cooling in the fridge and freezer compartments, but the internal LED works, so it is convenient for cleaning.

- Press the **Cleaning Time** button for 3 seconds to turn on the function.
- This function automatically stops after 15 minutes, and all functions of the refrigerator will be re-operated.
- After the cleaning time runs out, the LED lamp inside the appliance blinks and an alarm sounds.

⚠ CAUTION

- This function stops all cooling in the fridge and freezer compartments for 15 minutes. Be careful about storing ice or easily perishable foods.

Dispenser Control Panel

Type A

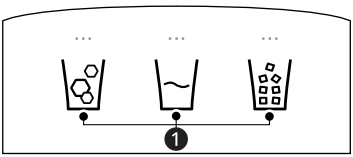

Type B

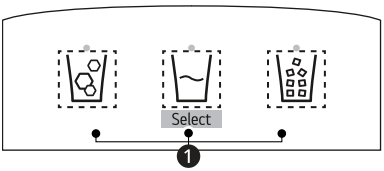

❶ **Water & Ice Type**[*1]

Select the desired dispenser mode from the buttons on the dispenser control panel. Press the dispenser paddle with a glass or other container to dispense cubed ice, water or crushed ice.

NOTE

- For optimal food preservation, increasing or decreasing 1 °C from the default temperature is recommended for each compartment.
- The displayed temperature is the target temperature, and not the actual temperature inside the appliance.
- The actual temperature inside the appliance depends on the following factors: room temperature, the amount of food and how often the doors are opened, where the appliance is. Set the temperatures by considering these factors.
- If there is any finger or skin contacts to the control panel while cleaning it, the button function may operate.

Ice and Water Dispenser

This feature is only available on some models.

Before Using the Ice and Water Dispenser

⚠ CAUTION

- Keep children away from the dispenser to prevent children playing with or damaging the controls.
- Throw away the first few batches of ice (about 20 cubes and 7 cups of water). This is also necessary if the appliance has not been used for a long time.
- Clean the water dispensing system if they have not been used for 48 hours. Flush the water system connected to a water supply if water has not been drawn for 5 days.
- To clean the water dispensing system, flush the water through the dispenser about 5 minutes and throw away the first few batches of ice.
- Do not use a thin crystal cup or chinaware when dispensing water or ice.

NOTE

- If you open the fridge door while water, cubed ice or crushed ice is being dispensed, dispensing will be paused. When you close the door, the selected item will continue to be dispensed.
- If the cup rim is small, water may splash out of the glass or miss it completely.
- Use a cup with a rim of over 68 mm in diameter when dispensing water, cubed ice or crushed ice.
- When the ice maker produces smaller ice cubes, or the cubes become lumped together, the amount of water supplied to the ice maker may be low due to insufficient water in the water tank. If ice is not used frequently or the freezer set temperature is too warm, it may also lump together.
- It is normal for milky / cloudy water to be dispensed after replacing the water filter. This air in the water will eventually clear and is safe to drink during this transition.

Using the Ice and Water Dispenser

1 Press the dispenser selection button ❶, and then the LED above the icon that you want illuminates.

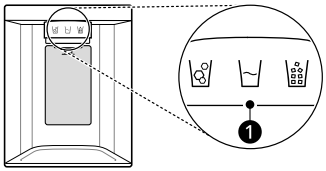

2 Press the dispenser paddle ❷ with a glass or other container to dispense cubed ice, water or crushed ice.

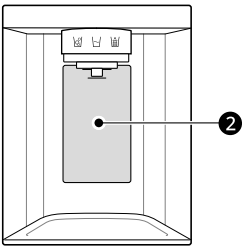

Cleaning the Dispenser

Cleaning the Ice and Water Outlet
Wipe the water outlet ❶ or ice outlet ❷ frequently with a clean cloth as it may get dirty easily.

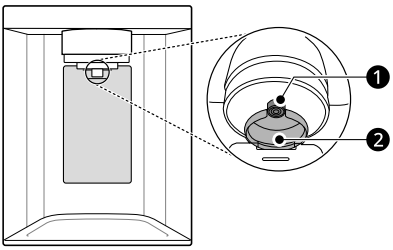

NOTE

- Lint from a cloth may adhere to the outlets.

Cleaning the Dispenser Tray
Wipe the entire area with a damp cloth. The dispenser tray may become wet easily due to spilled ice or water.

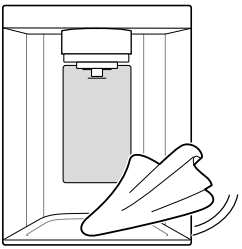

Automatic Icemaker

This feature is only available on some models.

This feature may vary depending on model purchased.

Before Using the In-Door Icemaker

- The icemaker produces ice normally when approximately 48 hours have passed after the appliance is initially installed.
- If the ice bucket is completely filled with ice, ice production will stop.
- Sound of ice dropping into the ice bucket is normal.
- If ice cubes are stored in the ice bucket for a long period of time, they may clump together and may not be separated easily. In such a case, empty the ice bucket and allow fresh ice to be made.

⚠ CAUTION

- It is normal for milky or cloudy water to be dispensed after replacing the water filter. This air in the water will clear eventually and is safe to drink.
- The first ice and water dispensed may include particles or odour from the water supply line or the water tank.
- If discoloured ice is dispensed, check the water tank and the water supply for a possible source. If the problem continues, contact the LG

Electronics customer information centre. Do not use the ice or water until the problem is corrected.

- Do not touch the ice outlet or the automatic icemaker with your hand or a tool.
- Dispense ice into a glass before filling it with water or other beverages. Splashing will occur if ice is dispensed into a glass that already contains liquid.
- Never use a glass that is exceptionally narrow or deep. Ice may jam in the ice passage, affecting the performance of the appliance.
- Keep the glass at a proper distance from the ice outlet. A glass held too close to the outlet may prevent ice from dispensing.
- Dispose of the ice inside the ice bucket if you go on vacation or if an extended power outage occurs. Water from melting ice may drop from the dispenser onto the floor.
- A container with a very small opening should be held as close to the dispenser as possible to avoid spilling.

In-Door Icemaker

The automatic icemaker can automatically make 70 - 182 cubes within a 24-hour period if conditions are favourable. This amount may vary according to the environment (ambient temperature around the appliance, frequency of the door being opened, amount of food stored in the appliance, etc.).

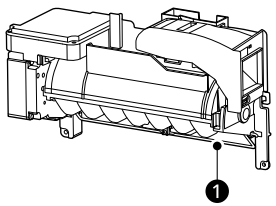

❶ Auto Shutoff (feeler arm)

Before Using the Freezer Icemaker

NOTE

- The icemaker begins producing ice approximately 48 hours after the appliance is initially installed.
- Throw away the first few batches of ice after installation.
- The sound of ice dropping into the ice bucket is normal.
- If the ice bucket is completely filled with ice, ice production will stop.
- The amount and shape of ice may vary according to the environment (ambient temperature around the appliance, frequency of the door being opened, amount of food stored in the appliance, water pressure, etc.).
- In the event of a power outage, throw away the ice stored in the ice bucket.

Freezer Icemaker (Cubed Ice)

This feature is only available on some models.

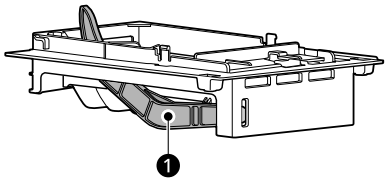

❶ Auto Shutoff (feeler arm)

NOTE

- This automatic freezer icemaker produces 12 cubes at a time, 50-110 pieces within a 24 hour period if conditions are favourable. This amount may vary according to the environment (ambient temperature around the appliance, frequency of the door being opened, amount of food stored in the appliance, etc.).

NOTE

- Ice cubes which are stored in the ice bucket for a long time may clump together and be difficult to separate. If this happens, empty the ice bucket completely and clean it before reinstalling it.

Using the Freezer Ice Bucket

This feature is only available on some models.

The ice bucket stores ice from the freezer icemaker.

⚠ CAUTION

- The freezer ice bucket must be placed correctly. Failure to do so can damage the ice bucket and icemaker.

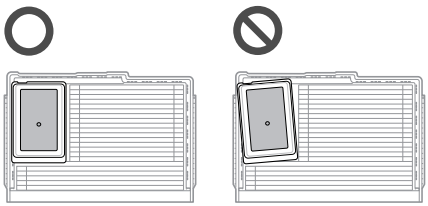

- Install the ice bucket so that the handle faces front, toward the freezer door. The rear side of the ice bucket must face the inside of the freezer.
- Remove the ice bucket to create more space inside the freezer if you do not use it.

Freezer Icemaker (Craft Ice)

This feature is only available on some models.

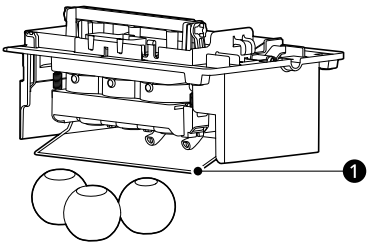

❶ Feeler Arm

⚠ CAUTION

- Do not insert round ice into the in-door ice bucket, as it can damage the ice and water dispenser.

NOTE

- The icemaker begins producing ice approximately 48 hours after the appliance is initially installed. The first batches of ice may not be round and clear.
- Following installation or water filter replacement, the first few batches of ice may be semicircular or contain air bubbles.
- If the water pressure is less than 20 psi (138 kPa) or a reverse osmosis system is used, the shape of the ice may vary.
- The ice may look cloudy depending on the water quality in the installation location and the operating conditions.
- Throw away any shards of ice you may find in the ice bucket, as they may stick to the ice stored in the ice bucket.
- After a short term power outage, it will take longer to make the first batch of ice, and the ice may not be round. If the power will be out for a longer period, throw away the ice stored in the ice bucket.
- The **Craft Ice** icemaker produces 1 batch of round ice (3 pieces) at a time.
- In **3 ICE** mode, the **Craft Ice** icemaker produces 1 batch of round ice (3 pieces) about every 26 hours. In **6 ICE** mode, the **Craft Ice** icemaker produces 2 batches of round ice (6 pieces total) in the same period.
- For more ice, select the **6 ICE** mode. For clearer ice, select the **3 ICE** mode.
- The time needed to make ice may vary according to operating conditions.
- The ice bucket stores 20 - 30 pieces of round ice.

Turning the Icemaker On/Off

To turn the automatic icemaker On/Off, press and hold the **Ice On** button on the control panel for three seconds.

⚠ CAUTION

- Do not keep the power turned on to the icemaker if the water line is not connected. Doing so can damage the icemaker.

Normal Sounds You May Hear

- The icemaker water valve buzzes as the icemaker fills with water. If the **Ice On/Off** button is set to **On**, it will buzz even if it has not yet been hooked up to water. To stop the buzzing, press the **Ice On/Off** button to **Off** position.
- You will hear the sound of ice dropping into the ice bucket and water running in the pipes as the icemaker refills.

Preparing for Vacation

Set the icemaker(s) power to off and shut off the water supply to the appliance.

NOTE

- The ice bucket should be emptied any time the icemaker(s) is turned off.

If the ambient temperature will drop below freezing, have a qualified technician drain the water supply system to prevent serious property damage due to flooding caused by ruptured water lines or connections.

InstaView

This feature is only available on some models.

Using the InstaView Door in Door

The **InstaView Door in Door** lets you see if you're running low on frequently used items like beverages and snacks, without opening the fridge door.

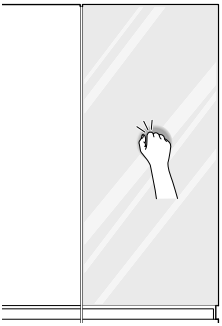

1 Knock twice on the glass to turn the LED light inside the **Door in Door** on or off.

2 The LED light turns off automatically after ten seconds.

⚠ CAUTION

- Do not open the door of the appliance with the door in door open, or do not open the door in door while the door of the appliance is open. The door in door may be struck by the edge of the appliance and damaged.

NOTE

- The **InstaView Door in Door** function is disabled for 2 seconds after closing the left or right freezer door, and momentarily disabled whilst the ice dispenser is in use.
- Knock near the center of the glass. Knocking near the edges of the glass may not activate the **InstaView Door in Door** function.
- Knock hard enough so that the knocking sound is audible.

NOTE

- The **InstaView Door in Door** function may activate if a loud noise occurs near the refrigerator.
- Clean the glass door with a dry cloth. To remove stubborn stains, slightly moisten a clean cloth with lukewarm water or a glass cleaner. Do not spray glass cleaner directly at the glass door.

Door in Door

This feature is only available on some models.

Using the Door in Door

Pull the lever at the bottom of the door upwards until the door in door opens.

There is plenty of storage space inside the door in door and its surrounding baskets, allowing you to store food in an organized manner.

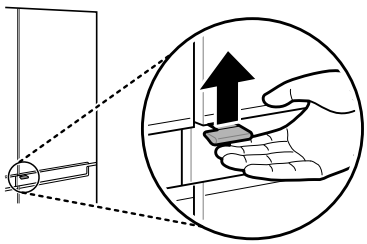

⚠ CAUTION

- Do not open the door of the appliance with the door in door open, or do not open the door in door while the door of the appliance is open. The door in door may be struck by the edge of the appliance and damaged.

Drawers

Removing/Refitting the Fridge Drawer

1 Pull out the drawer to full extension, lift the front up, and pull straight out.

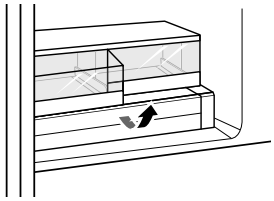

2 Lift the front of the cover up with both hands until it detaches from the back wall of the cabinet, then pull it out.

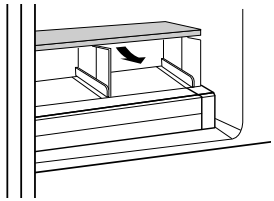

3 To refit, insert the cover into the refrigerator with both hands and lower it onto the guides.

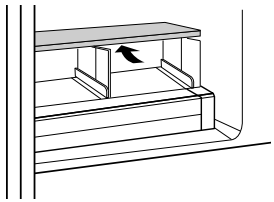

4 Slightly tilt up the front, insert the drawer into the frame and push it back into place.

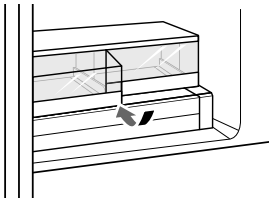

Removing/Refitting the Pantry Drawer

1 To remove the pantry drawer, pull out the pantry drawer to full extension, lift the front up, and pull straight out.

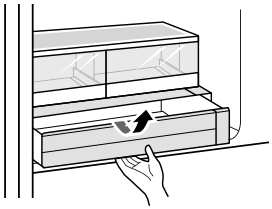

2 To refit, slightly tilt up the front, insert the pantry drawer into the frame and push it back into place.

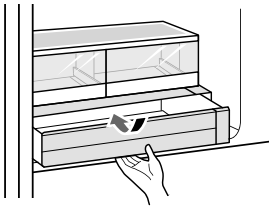

Glide‘N’Serve

This feature is only available on some models.

Using the Glide‘N’Serve

This drawer can be used for large party trays, deli items and beverages. This drawer should not be used to store vegetables that require high humidity.

Press the **Select** button to choose between **Produce** (Cold), **Deli** (Colder) and **Meat** (Coldest).

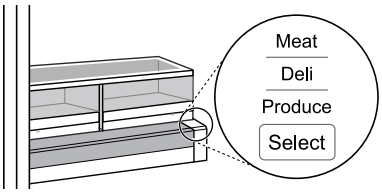

⚠ CAUTION

- Do not place any items on the Glide'N'Serve cover.

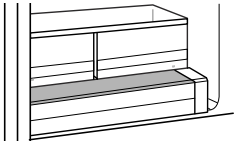

Removing/Refitting the Glide‘N’Serve

1 To remove the Glide'N'Serve, pull out the Glide'N'Serve to full extension, lift the front up, and pull straight out.

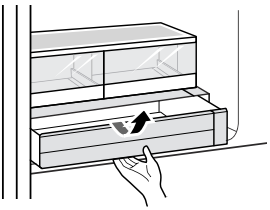

2 To refit, slightly tilt up the front, insert the Glide'N'Serve into the frame and push it back into place.

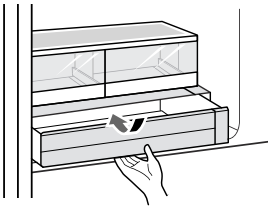

Shelf

⚠ CAUTION

- Glass shelves are heavy. Use special care when removing them.
- Do not clean glass shelves with warm water while they are cold. Shelves may break if exposed to sudden temperature changes or impact.

Removing/Refitting the Shelf

This feature may vary depending on model purchased.

The shelves in the fridge are adjustable to meet individual storage needs. Adjusting the shelves to fit items of different heights will make finding the exact item you want easier.

Type A

1 Open the fridge doors completely.

2 If the Fresh Tray is inserted under the fridge shelf, remove the Fresh Tray first.

3 Hold both ends of the shelf and lift it up slightly.

4 Pull the shelf out while tilting it at an angle.

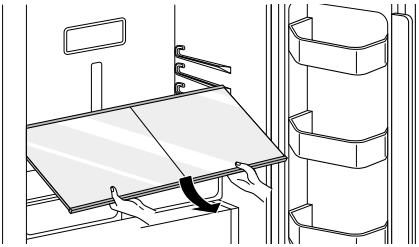

5 Refit the shelf in the reverse order of the removal process.

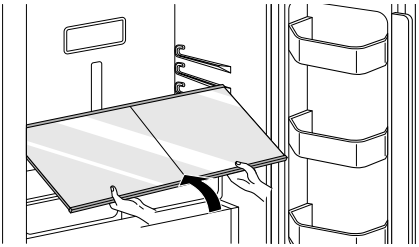

⚠ CAUTION

- Make sure that shelves are level from one side to the other. Failure to do so may result in the shelf falling or food spilling.

Type B

1 Tilt up the front of the shelf and then lift the shelf straight up.

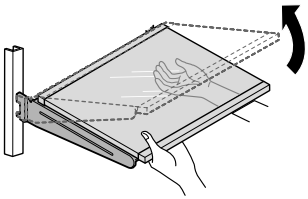

2 Pull the shelf out.

3 To assemble, tilt the front of the shelf upwards and carefully guide the shelf hooks into the slots at the desired height.

⚠ CAUTION

- Assemble the shelf that will be positioned on the left side first.

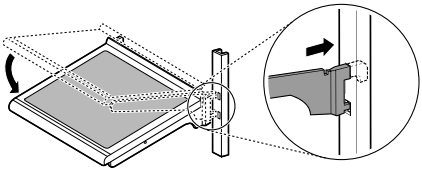

4 Install the remaining shelf on the right side using the same method.

5 Lift up the left shelf, press down the right shelf, and ensure that both shelves are flat.

Door Basket

Removing/Refitting the Door Basket

⚠ CAUTION

- Regularly detach and wash the door baskets; they can become easily contaminated by food.

The door baskets are removable for easy cleaning and adjustment.

1 To remove the baskets, simply lift the basket up and pull straight out.

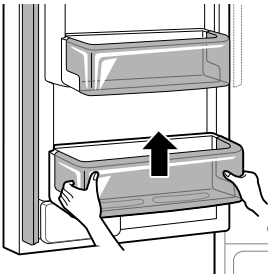

2 To assemble the baskets, slide it in above the desired support and push down until it snaps into place.

Durabase

Using the Durabase

⚠ CAUTION

- If the **Durabase** divider is removed, there is enough open space for children or pets to crawl inside. To prevent accidental child and pet entrapment or suffocation risk, DO NOT allow children or pets to touch or go near the drawer.

The **Durabase** divider allows you to organize the **Durabase** area into 2 sections. It can be adjusted from side to side to accommodate items of different sizes.

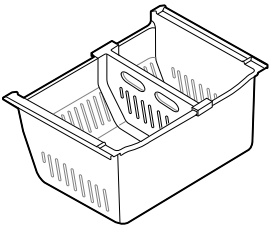

SMART FUNCTIONS

LG ThinQ Application

This feature is only available on some models.

The **LG ThinQ** application allows you to communicate with the appliance using a smartphone.

LG ThinQ Application Features

Communicate with the appliance from a smartphone using the convenient smart features.

Smart Diagnosis

- If you experience a problem while using the appliance, this smart diagnosis feature will help you diagnose the problem.

Settings

- Allows you to set various options on the appliance and in the application.

NOTE

- In the following cases, you must update the network information for each appliance in the **LG ThinQ** application under **Device Cards** > **Settings** > **Change Network**.
  - wireless router is changed
  - wireless router password is changed
  - Internet service provider is changed
- The application is subject to change for appliance improvement purposes without notice to users.
- Functions may vary by model.

Installing LG ThinQ Application and Connecting an LG Appliance

Models with QR Code

Scan the QR code attached to the product using the camera or a QR code reader application on your smartphone.

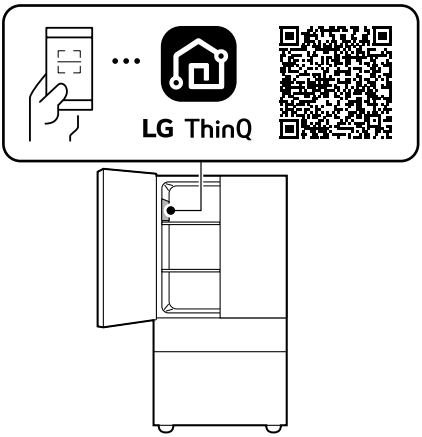

Models without QR Code

1. Search for and install the **LG ThinQ** application from the Google Play Store or Apple App Store on a smartphone.

2. Run the **LG ThinQ** application and sign in with your existing account or create an LG account to sign in.

3. Touch the add (+) button on the **LG ThinQ** application to connect your LG appliance. Follow the instructions in the application to complete the process.

NOTE

- To verify the Wi-Fi connection, check that the Wi-Fi indicator on the control panel is lit.

- The appliance supports 2.4 GHz Wi-Fi networks only. To check your network frequency, contact your Internet service provider or refer to your wireless router manual.
- **LG ThinQ** is not responsible for any network connection problems or any faults, malfunctions, or errors caused by network connection.
- The surrounding wireless environment can make the wireless network service run slowly.
- If the distance between the appliance and the wireless router is too far, the signal strength becomes weak. It may take a long time to connect or installation may fail.
- If the appliance is having trouble connecting to the Wi-Fi network, it may be too far from the router. Purchase a Wi-Fi repeater (range extender) to improve the Wi-Fi signal strength.
- The network connection may not work properly depending on the Internet service provider.
- The Wi-Fi connection may not connect or may be interrupted because of the home network environment.
- The appliance cannot be connected due to problems with the wireless signal transmission. Unplug the appliance and wait about a minute before trying again.
- The wireless network name (SSID) should be a combination of English letters (A-Z) and numbers (0-9). Do not use special characters.
- Smartphone user interface (UI) may vary depending on the mobile operating system (OS) and the manufacturer.
- If the security protocol of the router is set to **WEP**, you may fail to set up the network. Please change it to other security protocols (**WPA2** is recommended) and connect the product again.
- To disable the Wi-Fi function, press and hold the **Wi-Fi** button for 3 seconds. The Wi-Fi indicator will be turned off.
- To reconnect the appliance or add another user, press and hold the **Wi-Fi** button for 3 seconds to temporarily turn it off. Run the **LG ThinQ** application and follow the instructions in the application to connect the appliance.

Telecom Regulation

The operation of this equipment is subject to the following two conditions:

(1) it is possible that this equipment or device may not cause harmful interference and

(2) this equipment or device must accept any interference, including interference that may cause its undesired operation.

Open Source Software Notice Information

To obtain the source code that is contained in this product, under GPL, LGPL, MPL, and other open source licenses that have the obligation to disclose source code, and to access all referred license terms and copyright notices, please visit https://opensource.lge.com.

LG Electronics will also provide open source code to you for a charge covering the cost of performing such distribution upon email request to opensource@lge.com.

This offer is valid to anyone in receipt of this information for a period of three years after our last shipment of this product.

Smart Diagnosis

Use this feature to help you diagnose and solve problems with your appliance.

NOTE

- For reasons not attributable to LGE's negligence, the service may not operate due to external factors such as, but not limited to, Wi-Fi unavailability, Wi-Fi disconnection, local app store policy, or app unavailability.
- The feature may be subject to change without prior notice and may have a different form depending on where you are located.

LG ThinQ Application Feature

*1 This feature is only available on some models.

Smart Diagnosis*1

If you experience a problem while using the appliance, this smart diagnosis feature will help you diagnose the problem.

NOTE

- The application is subject to change for product improvement purposes without notice to users.

Using LG ThinQ to Diagnose Issues

If you experience a problem with your Wi-Fi equipped appliance, it can transmit troubleshooting data to a smartphone using the **LG ThinQ** application.

- Launch the **LG ThinQ** application and select the **Smart Diagnosis** feature in the menu. Follow the instructions provided in the **LG ThinQ** application.

Using Audible Diagnosis to Diagnose Issues

Follow the instructions below to use the audible diagnosis method.

- Launch the **LG ThinQ** application and select the **Smart Diagnosis** feature in the menu. Follow the instructions for audible diagnosis provided in the **LG ThinQ** application.

1 Press the **Lock** button to activate the lock function.
   - If the display has been locked for over 5 minutes, you must deactivate the lock and then reactivate it.

2 Open the fridge door and then hold the phone on the upper right speaker hole.

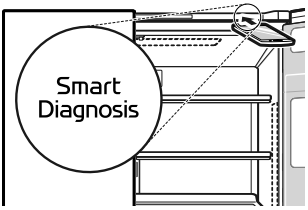

3 Press and hold the **Freezer** button for three seconds or longer while holding your phone to the speaker until the data transfer is complete.

4 After the data transfer is complete, the diagnosis will be displayed in the application.

NOTE

- For best results, do not move the phone while the tones are being transmitted.

MAINTENANCE

Cleaning

General Cleaning Tips

- Performing manual defrosting, maintenance or cleaning of the appliance while food is stored in the freezer can raise the temperature of the food and reduce its storage life.
- Regularly clean any surfaces that can come in contact with food.
- When cleaning the inside or outside of the appliance, do not wipe it with a rough brush, toothpaste, or flammable materials. Do not use cleaning agents containing flammable substances. This may cause discolouration or damage to the appliance.
  - Flammable substances: alcohol (ethanol, methanol, isopropyl alcohol, isobutyl alcohol, etc.), thinner, bleach, benzene, flammable liquid, abrasive, etc.
- After cleaning, check if the power cable is damaged.

Cleaning the Exterior

- When cleaning the outside air vents of the appliance by means of vacuuming, then the power cord should be unplugged from the outlet to avoid any static discharge that can damage the electronics or cause an electric shock. Regular cleaning of the rear and side ventilation covers is recommended to maintain reliable and economical operation of the unit.
- Keep the air vents on the exterior of the appliance clean. Blocked air vents can cause fire or appliance damage.
- For the appliance exterior, use a clean sponge or soft cloth and a mild detergent in warm water. Do not use abrasive or harsh cleaners. Dry thoroughly with a soft cloth. Do not use contaminated cloths when cleaning the stainless steel doors. Always use a dedicated cloth and wipe in the same direction as the grain. This helps reduce surface staining and tarnishing.

Cleaning the Interior

- Before removing a shelf or drawer from inside the appliance, remove all stored foods from the shelf or drawer to prevent injury or damage to the appliance. Otherwise, injury may occur due to the weight of stored foods.
- Detach the shelves and drawers and clean them with water and a mild detergent, and then dry them sufficiently, before replacing them.
- Regularly wipe the door gaskets and door seals with water and a mild detergent. Never use solvent or acidic based chemicals to clean the interior. Doing so will alter its integrity.
- Door basket spills and stains should be cleaned as they can compromise storage ability of the basket and could even be damaged.
- Never clean the shelves, door baskets, or containers in the dishwasher or in hot water. The parts may become deformed, and glass may shatter due to the heat.
- The automatic defrosting system in the appliance ensures that the compartment remains free of ice buildup under normal operating conditions. Users do not need to defrost it manually.

Cleaning the Condenser Cover

Use a vacuum cleaner with a brush to clean the condenser cover and vents. Do not remove the panel covering the condenser coil area.

We strongly recommend that this be done every 12 months to maintain operating efficiency. Failing to do so could cause loss of cooling, higher energy usage and compressor overheating.

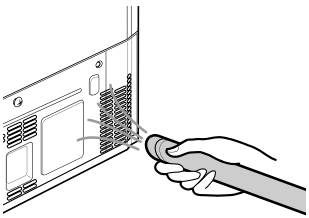

Water Filter

This feature is only available on some models.

Before Replacing the Water Filter

⚠ WARNING

- Do not allow children to have access to small parts during the installation of this product.
- Do not use with water that is microbiologically unsafe or of unknown quality without adequate disinfection before or after the system. Systems certified for cyst reduction may be used on disinfected water that may contain filterable cysts.

⚠ CAUTION

- Do not install if water pressure exceeds 827 kPa. If your water pressure exceeds 827 kPa, you must install a pressure limiting valve. Contact a plumbing professional if you are uncertain how to check your water pressure.
- Do not install where water hammer conditions may occur. If water hammer conditions exist, you must install a water hammer arrester. Contact a plumbing professional if you are uncertain how to check for this condition.
- Do not install on hot water supply lines. The maximum operating water temperature of this filter system is 37.8 °C.
- Protect filter from freezing. Drain filter when temperatures drop below 4.4 °C.
- The disposable filter cartridge MUST be replaced every 6 months, at the rated capacity or if a noticeable reduction in flow rate occurs.
- Where a backflow prevention device is installed on a water system, a device for controlling pressure due to thermal expansion must be installed.
- Ensure all tubing and fittings are secure and free of leaks.

NOTE

- While the testing was performed under standard laboratory conditions, actual performance may vary.
- It is essential that the manufacturer's recommended installation, maintenance and filter replacement requirements be carried out for the product to perform as advertised.

Replacing the Water Filter

The filter must be changed every 6 months or when the water filter indicator on the control panel lights turns on or the water dispenser output decreases.

- To purchase a replacement water filter:
  - Use replacement cartridge: LT1000P, LT1000PC, LT1000PCS or ADQ747935**
  - Visit your local dealer or distributor or contact the LG Electronics Customer Information Centre. For Further assistance, visit our website at lg.com.

1 If the top shelf, located below the water filter, is in the highest position, it will need to be removed prior to replacing the water filter.
   - To remove the shelf, lift the rear of the shelf and pull it out.

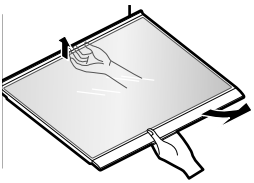

2 Remove the old water filter.

- Lower or remove the top left shelf to allow the water filter to rotate all the way down. Pinch the sides to open the water filter cover.

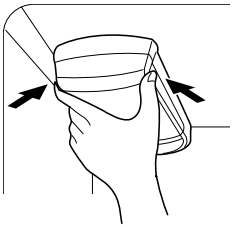

NOTE

- Replacing the water filter causes a small amount of water (around 25 cc) to drain.
- Wrap a cloth around the front end of the water filter cover to collect any leaking water. Hold the water filter upright, once it is removed, to prevent any remaining water from spilling out of the water filter.

3 Pull the water filter downward and turn it counterclockwise before pulling it out. Make sure to rotate the filter down completely before pulling it out of the manifold hole.

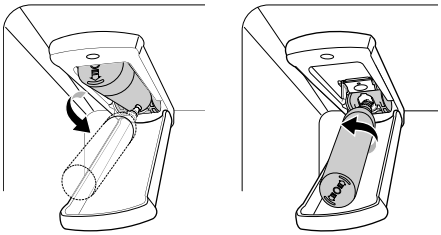

4 Replace with a new water filter.

- Take the new water filter out of its packing and remove the protective cover from the o-rings. With the water filter tabs in the horizontal position, push the new water filter into the manifold hole and turn it clockwise until it stops.

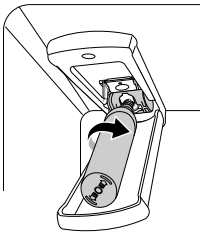

5 Close the water filter cover. The cover will click when closed correctly.

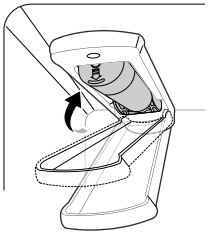

6 After the water filter is replaced,

- Models with water dispenser: dispense 10 liters of water (flush for approximately 5 minutes) to remove trapped air and contaminants from the system.

NOTE

- Do not dispense the entire 10 liters amount continuously. Press and release the dispenser pad for cycles of 30 seconds ON and 60 seconds OFF.

- Models without water dispenser: dispose of the first full bucket of ice produced.

7 After changing the filter, press and hold the **Water Filter** button for three seconds to reset the indicator light.

⚠ CAUTION

- Failure to replace filters when required or using non LG authorised water filters can cause the filter cartridge to leak and result in property damage.

Application Guidelines/Water Supply Parameters

- Service Flow: 1,9 lpm
- Water Supply: Community or Private Well - Potable Water
- Water Pressure: 138 - 827 kPa
- Water Temperature: 0,6 - 37,8 °C
- Capacity: 757 litres

TROUBLESHOOTING

Before Calling for Service

Cooling

Symptoms	Possible Cause & Solution
There is no refrigeration or freezing.	**Is there a power interruption?** • Check the power of other appliances.
	Appliance is unplugged. • Plug the power plug in the outlet properly.
	A fuse in your home may be blown or the circuit breaker tripped. Or the appliance is connected to a GFCI (Ground Fault Circuit Interrupter) outlet, and the outlet's circuit breaker has tripped. • Check the main electrical box and replace the fuse or reset the circuit breaker. Do not increase fuse capacity. If the problem is a circuit overload, have it corrected by a qualified electrician. • Reset the circuit breaker on the GFCI. If the problem persists, contact an electrician.
There is poor refrigeration or freezing.	**Is the fridge or freezer temperature set to its warmest setting?** • Set the fridge or freezer temperature to a colder setting.
	Is the appliance in direct sunlight, or is it near a heat generating object such as cooking oven or heater? • Check the installation area and reinstall it away from heat generating objects.
	Did you store hot food without cooling it first? • Cool the hot food first before putting it in the fridge or freezer compartment.
	Did you put in too much food? • Maintain an appropriate space between food.
	Are the appliance doors completely closed? • Completely close the door and make sure that stored food is not obstructing in the door.
	Is there enough space around the appliance? • Adjust the installation position to make enough space around the appliance.
The appliance contains a bad smell.	**Is the fridge or freezer temperature set to its warmest setting?** • Set the fridge or freezer temperature to a colder setting.

Symptoms	Possible Cause & Solution
The appliance contains a bad smell.	**Did you put in food with a strong smell?** • Store foods with strong smells in sealed containers.
	Vegetables or fruit may have spoiled in the drawer. • Throw away rotten vegetables and clean the vegetable drawer. Do not store vegetables too long in the vegetable drawer.

Ice & Water

Symptoms	Possible Cause & Solution
The automatic icemaker does not produce ice or produces a small amount of ice.	**Did you install the appliance recently?** • The ice maker produces ice normally when approximately 48 hours have passed after the appliance is installed. • If the fridge compartment temperature is too cold, the water filter can freeze and block the water flow to the ice maker.
	Did you connect the water supply pipe to the appliance and open the supply valve? • Connect the water supply pipe to the appliance and open the supply valve completely.
	Is the water supply hose bent? • If the water supply hose is bent, the water flow could be compromised.
	Have you dispensed a large amount of ice recently? • It takes approximately 24 hours to produce more ice in the automatic icemaker. Please wait.
	Did you set the ice maker switch or the automatic icemaker button on the control panel to ON? • Press I on the automatic icemaker switch or set **ON** for the automatic icemaker button on the control panel. (For more details on how to use, visit LG Electronics website or use your smart device.)
	Is the temperature of the freezer compartment set too high? • If the set temperature is too warm, ice will be produced slowly or not at all. Set the Freezer temperature to -18 °C for normal operation of the automatic icemaker.
	Have you been opening the appliance door frequently? • If you open the appliance door frequently, cold air will escape, lowering the speed of ice production. Do not open and close the appliance door frequently.

Symptoms	Possible Cause & Solution
The automatic icemaker does not produce ice or produces a small amount of ice.	**Is the appliance door completely closed?** • If the appliance door is not completely closed, the temperature of the freezer compartment will increase, slowing down the ice production speed. Close the appliance door completely.
Ice is not dispensed.	**Unable to hear the sound of ice coming out?** • In the control panel, select the modes for cubed ice and crushed ice alternately to dispense the ice.
	Is the ice path blocked? (You can check the ice passage by separating the ice bucket.) • Ice may not be dispensed properly if the ice passage is blocked. Check the ice and clean the ice path regularly.
Water does not come out.	**The supply valve may be turned off. (For Plumbed models Only)** • Open the water supply valve. • Check if the fridge compartment temperature is too cold, as the water filter can freeze and block the water flow to the dispenser.
	The water tank may be empty. (Non plumbed models only) • Fill the water tank.
	Is the water supply valve closed? (For Plumbed models Only) • Open the water supply valve.
	Are you using unfiltered water? • Unfiltered water can contain a large amount of various heavy metals or foreign substances, so the filter may be clogged in the early stage regardless of the life of the filter.
Water tastes strange.	**Is the taste of water different when comparing it with the taste of water from the previous water purifier?** • Has the purified water or cold water not been used for an extended period of time?
	Has it been a long time since you installed and replaced the filter? • If an expired filter is used, the purification performance may decline. It is recommended to replace the filter according to the filter replacement period.
	Have you flushed out the filter properly in the initial stage after installing it? • When you install or replace the filter for the first time, you need to remove air and activated carbon residue from inside the filter. Use the appliance after dispensing and discharging approximately 5 litres of purified water from the dispenser by pressing the water dispensing lever. (Activated carbon is harmless to humans.)

Symptoms	Possible Cause & Solution
Water tastes strange.	**Has the purified water or cold water not been used for an extended period of time?** • The taste of old water may change due to bacterial growth. Use the product after dispensing and discharging approximately 5 litres (approximately three minutes) from the water dispenser.

Condensation & Frost

Symptoms	Possible Cause & Solution
There is condensation inside the appliance or on the bottom of the vegetable drawer cover.	**Did you store hot food without cooling it first?** • Cool the hot food first before putting it inside the fridge or freezer.
	Did you leave the appliance door open? • Although the condensation will disappear soon after you close the appliance door, you can wipe it with a dry cloth.
	Do you open and close the appliance door too frequently? • Condensation can form due to the temperature difference from the outside. Wipe out the dampness with a dry cloth.
	Did you put warm or moist food inside without sealing it in a container? • Store food in a covered or sealed container.
Frost has formed in the freezer compartment.	**Doors may not be closed properly.** • Check if the food item inside the appliance is blocking the door and make sure that the door is tightly closed.
	Did you store hot food without cooling it first? • Cool the hot food first before putting it in the fridge or freezer compartment.
	Is the air entry or exit of the freezer compartment blocked? • Make sure that air entry or exit is not blocked so that the air can circulate inside.
	Is the freezer compartment overfilled? • Maintain an appropriate space between items.
Frost or condensation has formed inside or outside the appliance.	**Did you open and close the appliance door frequently or is the appliance door improperly closed?** • Frosts or condensation can form if the outside air penetrates inside the appliance.

Symptoms	Possible Cause & Solution
Frost or condensation has formed inside or outside the appliance.	**Is the installation environment humid?** • Condensation can appear on the exterior of the appliance if the installation area is too humid or on a humid day such as a rainy day. Wipe off any moisture with a dry cloth.
The side or front of the appliance is warm.	**There are anti condensation pipes fitted to these areas of the appliance to reduce condensation forming from around the door area.** • The heat releasing pipe to prevent condensation is installed on the front and side of the appliance. You may feel it particularly hot right after the appliance is installed or during the summer. You can be assured that this is not a problem and is quite normal.
There is water inside or outside of the appliance.	**Is there water leakage around the appliance?** • Check if the water has leaked from a sink or another place.
	Is there water on the bottom of the appliance? • Check if the water is from the thawed frozen food or a broken or dropped container.

Parts & Features

Symptoms	Possible Cause & Solution
The appliance door is not closed tightly.	**Is the appliance leaning forward?** • Adjust the front feet to raise the front side slightly.
	Were the shelves properly assembled? • Refit the shelves if needed.
	Did you close the door with excessive force? • If you apply too much force or speed when closing the door, it may remain briefly open before closing. Make sure that you do not slam the door closed. Close the door gently.
It is difficult to open the appliance door.	**Did you open the door right after you closed it?** • If you try to open the appliance door within one minute after you closed it, you may have difficulties because of the pressure inside the appliance. Try to open the appliance door again in a few minutes so that the internal pressure stabilizes.
Door mullion does not fold in and out properly.	**Are front levelling legs extended, the appliance level, and doors aligned?** • Once the door baskets are filled, the doors may become misaligned, preventing the door mullion or the Auto Open Door function from working properly. Extend both front levelling legs fully so they are in firm contact with the floor. Follow the instruction in the Door Alignment section to raise the left fridge door until the door mullion is once again working properly. Adjust the right fridge door so it aligns with the left fridge door.

Symptoms	Possible Cause & Solution
The inside lamp in the appliance does not turn on.	**Lamp failure** • Close the door and re-open. If the lamp does not turn on, please contact the LG Electronics customer information centre. Do not attempt removal of the lamp.

Noises

Symptoms	Possible Cause & Solution
The appliance is noisy and generates abnormal sounds.	**Is the appliance installed on a weak floor or improperly levelled?** • Install the appliance on a solid and flat area.
	Does the rear of the appliance touch the wall? • Adjust the installation position to allow enough clearance around the appliance.
	Are objects scattered behind the appliance? • Remove the scattered objects from behind the appliance.
	Is there an object on top of the appliance? • Remove the object on top of the appliance.
Clicking noises	**The defrost control will click when the automatic defrost cycle begins and ends. The thermostat control (or appliance control on some models) will also click when cycling on and off.** • Normal Operation
Rattling noises	**Rattling noises may come from the flow of appliance, the water line on the back of the unit (for plumbed models only), or items stored around the appliance.** • Normal Operation
	Appliance is not resting evenly on the floor. • Floor is weak or uneven or levelling legs need to be adjusted. See the Door Alignment section.
	Appliance with a compressor was moved while operating. • Normal operation. If the compressor does not stop rattling after three minutes, turn the power to the appliance off and then on again.
Whooshing noises	**Evaporator fan motor is circulating air through the fridge and freezer compartments.** • Normal Operation
	Air is being forced over the condenser by the condenser fan. • Normal Operation

Symptoms	Possible Cause & Solution
Gurgling noises	**Appliance flowing through the cooling system.** • Normal Operation
Popping noises	**Contraction and expansion of the inside walls due to changes in temperature.** • Normal Operation
Vibrating	**If the side or back of the appliance is touching a cabinet or wall, some of the normal vibrations may make an audible sound.** • To eliminate the noise, make sure that the sides and back do not make any contact with any wall or cabinet.
Buzzing sound from the water tank. (Non plumbed models only)	**You may hear valve a buzzing sound from the water tank if the icemaker is on and the water tank is empty.** • Fill the water tank or turn the icemaker off.

Wi-Fi

Symptoms	Possible Cause & Solution
Your home appliance and smartphone are not connected to the Wi-Fi network.	**The password for the Wi-Fi that you are trying to connect to is incorrect.** • Find the Wi-Fi network connected to your smartphone and remove it, then register your appliance on **LG ThinQ**.
	Mobile data for your smartphone is turned on. • Turn off the **Mobile data** of your smartphone and register the appliance using the Wi-Fi network.
	The wireless network name (SSID) is set incorrectly. • The wireless network name (SSID) should be a combination of English letters (A-Z) and numbers (0-9). Do not use special characters.
	The router frequency is not 2.4 GHz. • Only a 2.4 GHz router frequency is supported. Set the wireless router to 2.4 GHz and connect the appliance to the wireless router. To check the router frequency, check with your Internet service provider or the router manufacturer.
	The distance between the appliance and the router is too far. • If the distance between the appliance and the router is too far, the signal may be weak and the connection may not be configured correctly. Move the location of the router so that it is closer to the appliance.

APPENDIX

Information

Product Information

The volume and annual energy consumption, printed on the label on the front of the appliance, is determined according to the national standards.

This information is applicable only to Panama, Costa Rica, El Salvador and Jamaica.

Specification

The appearance and specifications contained in this manual may vary due to the constant improvements made to the product.

Specification for Mexico

This information is applicable only to Mexico.

Model No.	GM25BPT GM65BPT GM65BPP	GM65FPP	GM90BIP GM90BP GM90FIP GM90HIP GM90KP GM90KIP GM90FQP GM90FQT GM89QFT GM90FIT GM90KT	GM90LIP GM89SXP	GM65FQP GM65BQP	GM76WIT GM76FIP
Voltage	127 V~	127 V~	127 V~	127 V~	127 V~	127 V~
Frequency	60 Hz	60 Hz	60 Hz	60 Hz	60 Hz	60 Hz
Rated Current	3,5 A	3,5 A	3,2 A	3,2 A	3,5 A	3,2 A
Defrost	240 W	240 W	300 W	300 W	240 W	300 W
Volume L / ft^3	710 / 25,2	709 / 25,0	897 / 31,7	869 / 30,7	712 / 25,2	750 / 26,5

Importer : LG Electronics Mexico, S.A. de C.V.
Av. Sor Juana Inés de la Cruz No.555, Col. San Lorenzo Industrial. Tlalnepantla de Baz, Estado de México C.P. 54033

Call the LG Electronics Customer Information Centre at:
55 5321 1919

Specification for Ecuador

This information is applicable only to Ecuador.

The appearance and specifications contained in this manual may vary due to the constant improvements made to the product.

Manufacturer's name	LG Electronics Reynosa, S. A. de C. V.	
Model No.	VF25BNNBB	VF25LNIBB
Climate class	ST (SUBTROPICAL)	
Annual energy consumption	440 kWh/year	590 kWh/year
Freezing capacity	8,0 kg/24 h	
Total gross volume	754 L	720 L
Gross fresh food compartment volume	497 L	463 L
Gross food freezer compartment volume	257 L	
Total storage volume	610 L	578 L
Storage fresh food compartment volume	472 L	440 L
Storage food freezer compartment volume	138 L	
Storage area	267 dm^2	258 dm^2
Temperature rise time	13 h	

NOTE

- The ice making capacity in the freezer is more than 5% of the total gross volume.

LG