OWNER'S MANUAL

Safety and Reference

LED TV*

* LG LED TV applies LCD screen with LED backlights.

Please read this manual carefully before operating your set and retain it for future reference.

www.lg.com

SAC30014001260 7REV08

Copyright © 2025 LG Electronics Inc. All Rights Reserved.

Warning! Safety Instructions

CAUTION

RISK OF ELECTRIC SHOCK
DO NOT OPEN

CAUTION: TO REDUCE THE RISK OF ELECTRIC SHOCK, DO NOT REMOVE COVER (OR BACK). NO USER-SERVICEABLE PARTS INSIDE. REFER TO QUALIFIED SERVICE PERSONNEL.

This symbol is intended to alert the user to the presence of uninsulated "dangerous voltage" within the product's enclosure that may be of sufficient magnitude to constitute a risk of electric shock to persons.

This symbol is intended to alert the user to the presence of important operating and maintenance (servicing) instructions in the literature accompanying this apparatus.

WARNING: TO REDUCE THE RISK OF FIRE AND ELECTRIC SHOCK, DO NOT EXPOSE THIS PRODUCT TO RAIN OR MOISTURE.

- TO PREVENT THE SPREAD OF FIRE, KEEP CANDLES OR OTHER ITEMS WITH OPEN FLAMES AWAY FROM THIS PRODUCT AT ALL TIMES.
- **Do not place the TV and/or remote control in the following environments:**
  - Keep the product away from direct sunlight.
  - An area with high humidity such as a bathroom.
  - Near any heat source such as stoves and other devices that produce heat.
  - Near kitchen counters or humidifiers where they can easily be exposed to steam or oil.
  - An area exposed to rain or wind.
  - Do not expose to dripping or splashing and do not place objects filled with liquids, such as vases, cups, etc. on or over the apparatus (e.g., on shelves above the unit).
  - Near flammable objects such as gasoline or candles, or expose the TV to direct air conditioning.
  - Do not install in excessively dusty places.

  Otherwise, this may result in fire, electric shock, combustion/explosion, malfunction or product deformation.
- **Ventilation**
  - Install your TV where there is proper ventilation. Do not install in a confined space such as a bookcase.
  - Do not install the product on a carpet or cushion.
  - Do not block or cover the product with cloth or other materials while unit is plugged in.
- Take care not to touch the ventilation openings. When watching the TV for a long period, the ventilation openings may become hot.
- Protect the power cord from physical or mechanical abuse, such as being twisted, kinked, pinched, closed in a door, or walked upon. Pay particular attention to plugs, wall outlets, and the point where the cord exits the device.

- Do not move the TV whilst the Power cord is plugged in.
- Do not use a damaged or loosely fitting power cord.
- Be sure to grasp the plug when unplugging the power cord. Do not pull on the power cord to unplug the TV.
- Do not connect too many devices to the same AC power outlet as this could result in fire or electric shock.
- **Disconnecting the Device from the Main Power**
  - The power plug is the disconnecting device. In case of an emergency, the power plug must remain readily accessible.
- Do not let your children climb or cling onto the TV. Otherwise, the TV may fall over, which may cause serious injury.
- **Outdoor Antenna Grounding** (Can differ by country):
  - If an outdoor antenna is installed, follow the precautions below.

    An outdoor antenna system should not be located in the vicinity of overhead power lines or other electric light or power circuits, or where it can come in contact with such power lines or circuits as death or serious injury can occur.
- **Grounding** (Except for devices which are not grounded.)
  - TV with a three-prong grounded AC plug must be connected to a three-prong grounded AC outlet. Ensure that you connect the earth ground wire to prevent possible electric shock.
- Never touch this apparatus or antenna during a lightning storm. You may be electrocuted.
- Make sure the power cord is connected securely to the TV and wall socket if not secured damage to the Plug and socket may occur and in extreme cases a fire may break out.
- Do not insert metallic or inflammable objects into the product. If a foreign object is dropped into the product, unplug the power cord and contact the customer service.
- Do not touch the end of the power cord while it is plugged in. You may be electrocuted.
- **If any of the following occur, unplug the product immediately and contact your local customer service.**
  - The product has been damaged.
  - If water or another substance enters the product (like an AC adapter, power cord, or TV).
  - If you smell smoke or other odors coming from the TV.
  - When lightning storms or when unused for long periods of time.

  Even if the TV is turned off by the remote control or power button, AC power source is still connected to the unit if it is not unplugged.
- Do not use high voltage electrical equipment near the TV (e.g., a bug zapper). This may result in product malfunction.
- Do not attempt to modify this product in any way without written authorisation from LG Electronics. Accidental fire or electric shock can occur. Contact your local customer service for service or repair. Unauthorised modification could void the user's authority to operate this product.
- Use only an authorised attachments / accessories approved by LG Electronics. Otherwise, this may result in fire, electric shock, malfunction, or product damage.

- Never disassemble the AC adapter or power cord. This may result in fire or electric shock.
- Handle the adapter carefully to avoid dropping or striking it. An impact could damage the adapter.
- To reduce the risk of fire or electrical shock, do not touch the TV with wet hands. If the power cord prongs are wet or covered with dust, dry the power plug completely or wipe dust off.
- **Batteries**
  - Store the accessories (battery, etc.) in a safe location out of the reach of children.
  - Do not short circuit, disassemble, or allow the batteries to overheat. Do not dispose of batteries in a fire. Batteries should not be exposed to excessive heat.
- **Moving**
  - When moving, make sure the product is turned off, unplugged, and all cables have been removed. It may take 2 or more people to carry larger TVs. Do not press or put stress on the front panel of the TV. Otherwise, this may result in product damage, fire hazard or injury.
- Keep the packing anti-moisture material or vinyl packing out of the reach of children.
- Do not allow an impact shock, any objects to fall into the product, and do not drop anything onto the screen.
- Do not press strongly upon the panel with a hand or a sharp object such as a nail, pencil, or pen, or make a scratch on it. It may cause damage to screen.
- **Cleaning**
  - When cleaning, unplug the power cord and wipe gently with a soft/dry cloth. Do not spray water or other liquids directly on the TV. Do not clean your TV with chemicals including glass cleaner, any type of air freshener, insecticide, lubricants, wax (car, industrial), abrasive, thinner, benzene, alcohol etc., which can damage the product and/or its panel. Otherwise, this may result in electric shock or product damage.

Preparing

- If the TV is turned on for the first time after it was shipped from the factory, initialization of the TV may take a few minutes.
- Image shown may differ from your TV.
- Your TV's OSD (On Screen Display) may differ slightly from that shown in this manual.
- The available menus and options may differ from the input source or product model that you are using.
- New features may be added to this TV in the future.
- The device must be easily accessed to a location outlet near the access. Some devices are not made by turning on / off button, turning off the device and unplugging the power cord.
- The items supplied with your product may vary depending on the model.
- Product specifications or contents of this manual may be changed without prior notice due to upgrade of product functions.
- For an optimal connection, HDMI cables and USB devices should have bezels less than 10 mm thick and 18 mm width. Use an extension cable that supports USB 2.0 if the USB cable or USB memory stick does not fit into your TV's USB port.

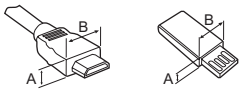

* A ≦ 10 mm

* B ≦ 18 mm

- Use a certified cable with the HDMI logo attached.
- If you do not use a certified HDMI cable, the screen may not display or a connection error may occur.
- Recommended HDMI Cable Types
  - Ultra High Speed HDMI®/™ Cable (3 m or less)

Separate Purchase

Separate purchase items can be changed or modified for quality improvement without any notification. Contact your dealer to buy these items. These devices only work with certain models.

The model name or design may be changed depending on the upgrade of product functions, manufacturer's circumstances or policies.

Magic Remote Control

(Depending on model)

MR24GA

Check whether your TV model supports Bluetooth in the Wireless Module Specification to verify whether it can be used with the Magic Remote.

Wall Mounting Bracket

Make sure to use screws and wall mount bracket that meet the VESA standard. Standard dimensions for the wall mount kits are described in the following table.

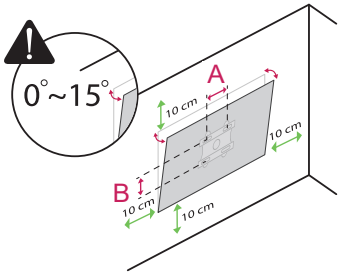

Model	43/50UK66* 43/50UK76* 43/50UK34*	
VESA (A x B) (mm)	200 x 200	
Standard screw	M6	
Number of screws	4	
Wall mount bracket	LSW240B MSW240	
Model	55UK66*	55UK76* 55UK34*
VESA (A x B) (mm)	300 x 200	300 x 300
Standard screw	M6	M6
Number of screws	4	4
Wall mount bracket	OLW480B MSW240	WB24GCB MSW240
Model	65UK66*	65UK76*
VESA (A x B) (mm)	300 x 200	300 x 300
Standard screw	M6	M6
Number of screws	4	4
Wall mount bracket	OLW480B	WB24GCB
Model	75UK762*	75UK767*
VESA (A x B) (mm)	400 x 400	400 x 300
Standard screw	M6	M6
Number of screws	4	4
Wall mount bracket	WB24GCB	WB24GCB

Stand

(Depending on model)

Stand	Model
AM-ST21BA	43UK762H* 43UK342H*
AM-ST21BB	50UK762H* 50UK342H*
AM-ST21BC	55UK762H* 55UK342H*
AM-ST21BD	65UK762H*
AM-ST21BE	75UK762H*
AM-ST23BF	43/50/55UK767H* 43UK767V*
AM-ST23BK	65UK767H*
AM-ST23BM	75UK767H*

Lifting and moving the TV

Please note the following advice to prevent the TV from being scratched or damaged and for safe transportation regardless of its type and size.

- It is recommended to move the TV in the box or packing material that the TV originally came in.
- Before moving or lifting the TV, disconnect the power cord and all cables.
- When holding the TV, the screen should face away from you to avoid damage.
- Hold the top and bottom of the TV frame firmly. Make sure not to hold the transparent part, speaker, or speaker grill area.
- When transporting a large TV, there should be at least 2 people.
- When transporting the TV, do not expose the TV to jolts or excessive vibration.
- When transporting the TV, keep the TV upright, never turn the TV on its side or tilt towards the left or right.
- Do not apply excessive pressure to cause flexing / bending of frame chassis as it may damage the screen.
- When handling the TV, be careful not to damage the protruding buttons.

- Avoid touching the screen at all times, as this may result in damage to the screen.
- Do not move the TV by holding the cable holders, as the cable holders may break, and injuries and damage to the TV may occur.
- When attaching the stand to the TV set, place the screen facing down on a cushioned table or flat surface to protect the screen from scratches. (Depending on model)

Mounting on a Table

(Depending on model)

1 Lift and tilt the TV into its upright position on a table.
- Leave a 10 cm (minimum) space from the wall for proper ventilation.

2 Connect the power cord to a wall outlet.

- Do not apply foreign substances (oils, lubricants, etc.) to the screw parts when assembling the product. (Doing so may damage the product.)
- If you install the TV on a stand, you need to take actions to prevent the product from overturning. Otherwise, the product may fall over, which may cause injury.
- Do not use any unapproved items to ensure the safety and product life span.
- Any damage or injuries caused by using unapproved items are not covered by the manufacturer's warranty.
- When assembling the stand, ensure that all of the provided screws are attached. If the screws are not fully tightened, the product may tilt or tip over, resulting in damage. Tightening the screws with excessive force may cause them to come off due to abrasion of the screw joint.

Attaching the TV to a Desk

(Depending on model)

The TV should be attached to a desk so it cannot be pulled in a forward/backward direction, potentially causing injury or damaging the product.

A type

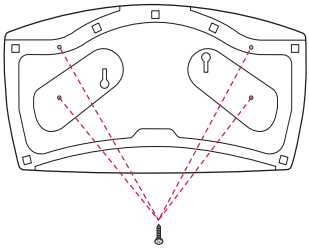

4-Screws
(Not supplied with TV)

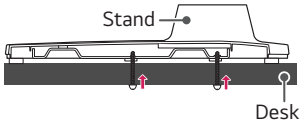

- Screw: M5 x L (*L: Table depth + 8~10 mm)
  ex) Table depth: 15 mm, Screw: M5 x L25

B type

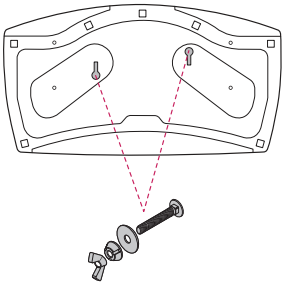

2-Screws for Stand Fixing,
2-Washers for Stand Fixing,
2-Nuts for Stand Fixing
(Supplied with TV)

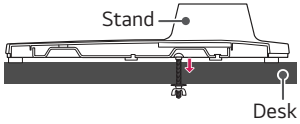

Using the Kensington security system

(Depending on model)

The Kensington security system connector is located at the rear of the TV. For more information of installation and using, refer to the manual provided with the Kensington security system or visit *http://www.kensington.com.* Connect the Kensington security system cable between the TV and a table.

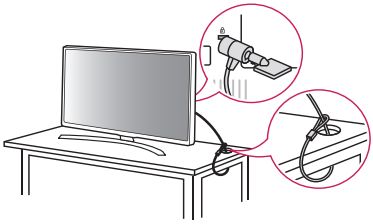

(Depending on model)

Securing the TV to a Wall

1 Insert and tighten the eye-bolts, or TV brackets and bolts on the back of the TV.
- If there are bolts inserted at the eye-bolts position, remove the bolts first.

2 Mount the wall brackets with the bolts to the wall. Match the location of the wall bracket and the eye-bolts on the rear of the TV.

3 Connect the eye-bolts and wall brackets tightly with a sturdy rope. Make sure to keep the rope horizontal with the flat surface.

- Use a platform or cabinet that is strong and large enough to support the TV securely.
- Brackets, bolts and ropes are not provided. You can obtain additional accessories from your local dealer.

Mounting to the Wall

Attach an optional wall mount bracket at the rear of the TV carefully and install the wall mount bracket on a solid wall perpendicular to the floor. When you attach the TV to other building materials, please contact qualified personnel. LG recommends that wall mounting be performed by a qualified professional installer. We recommend the use of LG's wall mount bracket. LG's wall mount bracket is easy to move with cables connected. When you do not use LG's wall mount bracket, please use a wall mount bracket where the device is adequately secured to the wall with enough space to allow connectivity to external devices. It is advised to connect all the cables before installing fixed wall mounts.

- Remove the stand before installing the TV on a wall mount by performing the stand attachment in reverse. (Depending on model)
- For more information of screws and wall mount bracket, refer to the Separate purchase.
- If you intend to mount the product to a wall, attach VESA standard mounting interface (optional parts) to the back of the product. When you install the set to use the wall mounting bracket (optional parts), fix it carefully so as not to drop.
- When mounting a TV on the wall, make sure not to install the TV by hanging the power and signal cables on the back of the TV.
- Do not install this product on a wall if it could be exposed to oil or oil mist. This may damage the product and cause it to fall.

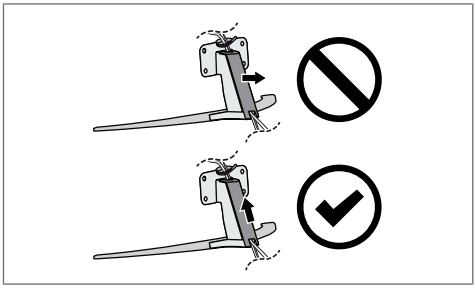

(Depending on model)

- Do not use a sharp object when you detached the cable cover. This could damage the cable or the cabinet. It may also cause personal harm. (Depending on model)

- When installing the wall mounting bracket, it is recommended to cover the stand hole using tape, in order to prevent the influx of dust and insects. (Depending on model)

Connections

Connect various external devices to the TV and switch input modes to select an external device. For more information of external device's connection, refer to the manual provided with each device.

Antenna/Cable

Connect the TV to a wall antenna socket with an RF cable (75 Ω).

- Use a signal splitter to use more than 2 TVs.
- If the image quality is poor, install a signal amplifier properly to improve the image quality.
- If the image quality is poor with an antenna connected, try to realign the antenna in the correct direction.
- An antenna cable and converter are not supplied.
- For a location that is not supported with ULTRA HD broadcasting, this TV cannot receive ULTRA HD broadcasts directly. (Depending on model)

Satellite dish

Connect the TV to a satellite dish to a satellite socket with a satellite RF cable (75 Ω). (Depending on model)

CI module

View the encrypted (pay) services in digital TV mode. (Depending on model)

- Check if the CI module is inserted into the COMMON INTERFACE card slot in the right direction. If the module is not inserted properly, this can cause damage to the TV and the COMMON INTERFACE card slot.
- If the TV does not display any video and audio when CI+ CAM is connected, please contact to the Terrestrial/Cable/Satellite Service Operator.

Other connections

Connect your TV to external devices. For the best picture and audio quality, connect the external device and the TV with the HDMI cable. Some separate cable is not provided.

HDMI

- Supported HDMI Audio format:
  (Depending on model)
  AC3 (Dolby Digital), EAC3, PCM

- If the device connected to Input Port also supports HDMI Deep Colour, your picture may be clearer. However, if the device doesn't support it, it may not work properly. In that case, change the TV's [HDMI Deep Colour] setting to off.
  (Depending on model)
- ⚙ → ⚙ → [General] → [External Devices] → [HDMI Settings] → [HDMI Deep Colour]
  (Depending on model)

USB

Some USB Hubs may not work. If a USB device connected through a USB Hub is not detected, connect it directly to the USB port on the TV.

- It is recommended that you use a USB hub or USB HDD with a power supply. (If the power supplied is not sufficient, the USB storage device may not be detected properly.)
- It is recommended that you use an external USB HDD with a rated voltage of 5 V of less and a rated current of 500 mA or less.

External Devices

Available external devices are: Blu-ray player, HD receivers, DVD players, VCRs, audio systems, USB storage devices, PC, gaming devices, and other external devices.

- The external device connection may differ from the model.
- Connect external devices to the TV regardless of the order of the TV port.
- Refer to the external equipment's manual for operating instructions.
- If you connect a gaming device to the TV, use the cable supplied with the gaming device.
- In PC mode, there may be noise associated with the resolution, vertical pattern, contrast or brightness. If noise is present, change the PC output to another resolution, change the refresh rate to another rate or adjust the brightness and contrast on the [Picture] menu until the picture is clear.
- In PC mode, some resolution settings may not work properly depending on the graphics card.
- If ULTRA HD content is played on your PC, video or audio may become disrupted intermittently depending on your PC's performance. (Depending on model)
- When connecting via a wired LAN, it is recommended to use a CAT 7 cable. (Only when **LAN** port is provided.)

External Speakers

(Depending on model)

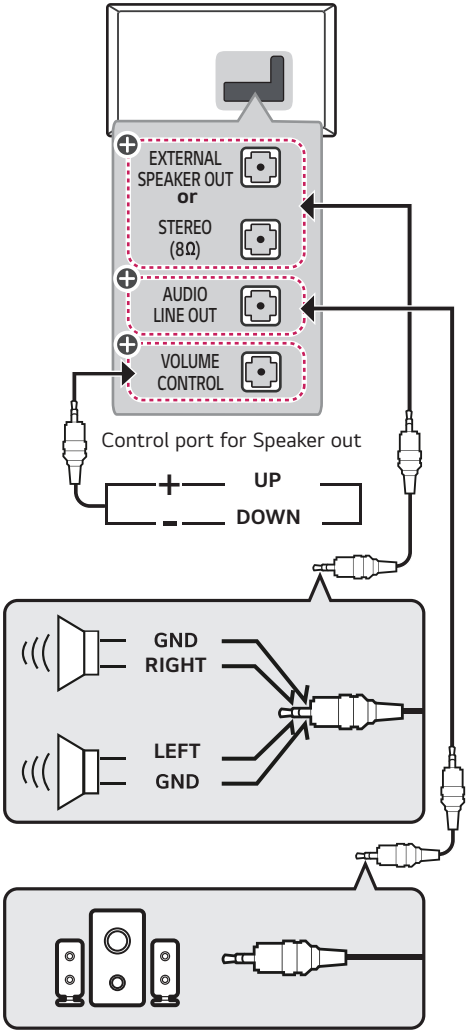

⊕: Depending on model

- Use only with the 3 Pole 3.5 mm Stereo Jack.
- Do not connect your headphones or earphones to the port for connecting an external speaker.

Method of volume control port

(Depending on model)

- Cable Spec.

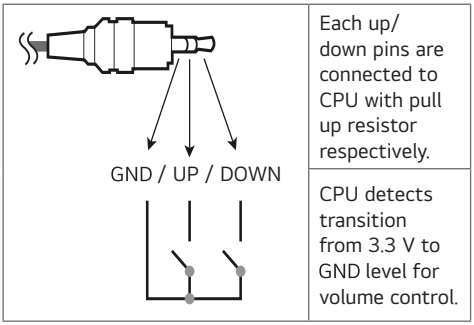

Network

(Depending on model)

Wired network connection

This TV can be connected to a Pro:Centric server via the **LAN** port. After making the physical connection, the TV needs to be set up for network communication.

Connect the **LAN** port of the Modem or Router from Pro:Centric server to the **LAN** port on the TV.

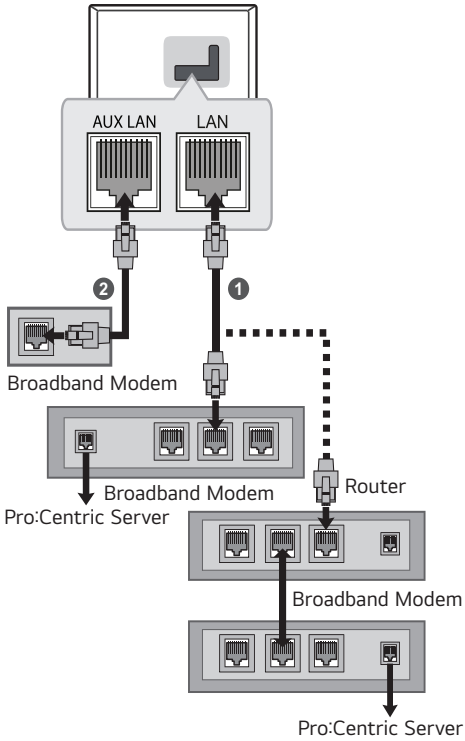

1. Connect the **LAN** port of the Modem or Router to the **LAN** port on the TV.
2. Connect the **LAN** port of the PC to the **AUX LAN** port on the TV. (Depending on model)

- Do not connect a modular phone cable to the **LAN** port.
- Since there are various connection methods, please follow the specifications of your telecommunication carrier or internet service provider.

Turning on the TV

You can simply operate the TV functions, using the button.

A type	B type
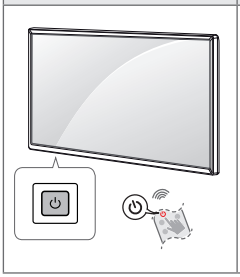	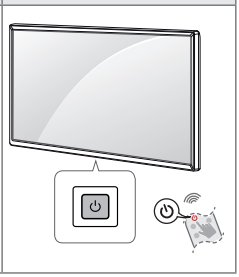

Basic functions

	Power On (Press) Power Off[1] (Press and Hold) Menu Control (Press[2]) Menu Selection (Press and Hold[3])

1) All running apps will close.

2) You can access and adjust the menu by pressing the button when TV is on.

3) You can use the function when you access menu control.

Adjusting the menu

(Depending on model)

When the TV is turned on, press the ⏻ button one time. You can adjust the Menu items using the button.

⏻	Turns the power off.
	Changes the input source.
∧ ∨	Scrolls through the saved programmes.
+ −	Adjusts the volume level.

Adjusting the Angle of the TV to suit view

(Depending on model)

Swivel 20 degrees to the left or right and adjust the angle of the TV to suit your view.

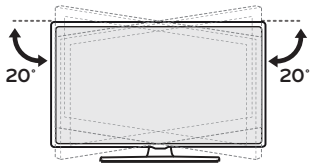

- When adjusting the angle of the product, watch out for your fingers.
  - Personal injury may occur if hands or fingers are pinched. If the product is tilted too much, it may fall, causing damage or injury.

Using Remote Control

The descriptions in this manual are based on the buttons on the remote control. Please read this manual carefully and use the TV correctly.

To replace batteries, open the battery cover, replace batteries (1.5 V AAA) matching the ⊕ and ⊖ ends to the label inside the compartment, and close the battery cover.

Make sure to point the remote control toward the remote control sensor on the TV.

(Depending on model)

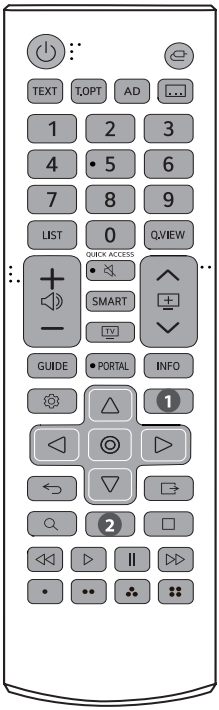

(Some buttons and services may not be provided depending on models or regions.)

*** To use the button, press and hold for more than 1 seconds.**

**** To use the button, press and hold for more than 2 seconds.**

***** To use the button, press and hold for more than 3 seconds.**

****** To use the button, press and hold for more than 5 seconds. (Without facing the TV)**

(POWER) Turns the TV on or off.
(INPUT) Changes the input source.
Teletext buttons (TEXT, T.OPT) These buttons are used for teletext.
AD Audio descriptions function will be enabled.
Recalls your preferred subtitle in digital mode.
Number buttons Enters numbers.
LIST Accesses the saved programmes list.
Q.VIEW Returns to the previously viewed programme.
+ — Adjusts the volume level.
(MUTE) Mutes all sounds.
**** (MUTE)** Accesses the Accessibility Shortcuts menu. (If Audio Guidance is off at this time, turn it on)
****** (MUTE)** Adjusts the Multi IR function.
QUICK ACCESS **0*** Show the quick access.
1~9* Launch the app registered for each number.
SMART Accesses the Home menu.
SMART*** Screen Zoom function will be enabled.
TV You can watch TV. If you are watching TV, selects Radio, TV and DTV programme.
Scrolls through the saved programmes.
GUIDE Shows programme guide.
PORTAL Displays and removes hotel interactive menu.
PORTAL*** Screen Zoom function will be enabled.
INFO Views the information of the current programme and screen.

(SETTINGS) Accesses the Quick Settings.
(SETTINGS)* Displays the All Settings menu.
1 TIMER Turns the TV off in a set amount of time. (Depending on model)
1 NETFLIX Various content service buttons. (Depending on model)
Selects menus or options and confirms your input.
Navigation buttons (up/down/left/right) Scrolls through menus or options.
(BACK) Returns to the previous level.
(EXIT) Clears on-screen displays and returns to TV viewing.
(SEARCH) Show the search page. (Depending on model)
2 ALARM Sets the alarm function. (Depending on model)
2 TIMER Turns the TV off in a set amount of time. (Depending on model)
Control buttons ( ) Controls media contents.
These access special functions in some menus.

- Do not mix new batteries with old batteries. This may cause the batteries to overheat and leak.
- Failure to match the correct polarities of the battery may cause the battery to burst or leak, resulting in fire, personal injury, or ambient pollution.
- This apparatus uses batteries. In your community there might be regulations that require you to dispose of these batteries properly due to environmental considerations. Please contact your local authorities for disposal or recycling information.
- The product's internal and external batteries should not be exposed to excessive heat such as direct sunlight, fire, or the like.

Troubleshooting

The software version can be updated for improvement in performance.

Customer needs to ensure the compatibility of customer's equipment with LGE software. If needed, please consult with LGE and upload revised software version according to the guidance provided by LGE.

Cannot control the TV with the remote control.

- Check the remote control sensor on the product and try again.
- Check if there is any obstacle between the product and the remote control.
- Check if the batteries are still working and properly installed (⊕ to ⊕, ⊖ to ⊖).

No image display and no sound is produced.

- Check if the product is turned on.
- Check if the power cord is connected to a wall outlet.
- Check if there is a problem in the wall outlet by connecting other products.

The TV turns off suddenly.

- Check the power control settings. The power supply may be interrupted.
- Check if the auto-off function is activated on the settings related time.
- If there is no signal while the TV is on, the TV will turn off automatically after 15 minutes of inactivity.

When connecting to the PC (HDMI), no signal is detected.

- Turn the TV off/on using the remote control.
- Reconnect the HDMI cable.
- Restart the PC with the TV on.

Abnormal display

- If the product feels cold to the touch, there may be a small “flicker” when it is turned on. This is normal, there is nothing wrong with product.
- This panel is an advanced product that contains millions of pixels. You may see tiny black dots and/or brightly coloured dots (red, blue or green) at a size of 1 ppm on the panel. This does not indicate a malfunction and does not affect the performance and reliability of the product. This phenomenon also occurs in third-party products and is not subject to exchange or refund.
- You may find different brightness and colour of the panel depending on your viewing position(left/right/top/down).

  This phenomenon occurs due to the characteristic of the panel. It is not related with the product performance, and it is not malfunction.
- Displaying a still image for a prolonged period of time may cause image sticking. Avoid displaying a fixed image on the TV screen for a long period of time.

Generated sound

- “Cracking” noise: A cracking noise that occurs when watching or turning off the TV is generated by plastic thermal contraction due to temperature and humidity. This noise is common for products where thermal deformation is required.
- Electrical circuit humming/panel buzzing: A low level noise is generated from a high-speed switching circuit, which supplies a large amount of current to operate a product. It varies depending on the product. This generated sound does not affect the performance and reliability of the product.

- When cleaning the product, be careful not to allow any liquid or foreign objects to enter the gap between the upper, left or right side of the panel and the guide panel. (Depending on model)
- Make sure to wring any excess water or cleaner from the cloth.
- Do not spray water or cleaner directly onto the TV screen.
- Make sure to spray just enough of water or cleaner onto a dry cloth to wipe the screen.

Settings

(The configurable items differ depending on model.)

- [Standard] : Displays the picture with natural contrast, brightness and sharpness levels.
- [Basic] : Displays the picture in the manufacturer's basic setting which is optimised for normal viewing.
- [Auto Power Save] mode reduces power consumption by using dimming control.
  - Energy saving feature like [Energy Saving] → [Energy Saving Step] is switched [Auto], and power use is much less than [Vivid] mode.
  - The Ambient Light Sensor automatically adjusts the [Panel Brightness], based on ambient lighting conditions.
  - In dark viewing conditions, the TV gradually dims according to the brightness of the light source. A darker screen means less power consumption.

Specifications

ENGLISH

(Depending on country)

Broadcasting Specifications	
Television system	Terrestrial / Cable / Satellites Digital TV
External antenna impedance	75 Ω

Environment condition	
Operating Temperature	0 °C to 40 °C
Operating Humidity	Less than 80 %
Storage Temperature	-20 °C to 60 °C
Storage Humidity	Less than 85 %

- For information of the power supply and power consumption, refer to the label attached to the product.
- The energy information provided with the product is indicated in accordance with the regulations of each country. (Depending on Country)
  - The Energy consumption is measured in accordance with IEC 62087.
- Actual Energy consumption may vary depending on factors such as the type of video content being played and TV settings.

Open Source Software Notice Information

To obtain the source code that is contained in this product, under GPL, LGPL, MPL, and other open source licenses that have the obligation to disclose source code, and to access all referred license terms, copyright notices and other relevant documents, please visit *https://opensource.lge.com.*

LG Electronics will also provide open source code to you on CD-ROM for a charge covering the cost of performing such distribution (such as the cost of media, shipping, and handling) upon email request to *opensource@lge.com.*

This offer is valid to anyone in receipt of this information for a period of three years after our last shipment of this product.

Licenses

Supported licenses may differ by model.

HDMI™
HIGH-DEFINITION MULTIMEDIA INTERFACE

The terms HDMI, HDMI High-Definition Multimedia Interface, HDMI trade dress and the HDMI Logos are trademarks or registered trademarks of HDMI Licensing Administrator, Inc.

Manufactured under license from Dolby Laboratories. Dolby, Dolby Vision, Dolby Vision IQ, Dolby Audio, Dolby Atmos, and the double-D symbol are trademarks of Dolby Laboratories Licensing Corporation.

HEVC Advance™
Covered by patents at patentlist.accessadvance.com

The Bluetooth® word mark and logos are registered trademarks owned by Bluetooth SIG, Inc. and any use of such marks by LG Electronics Inc. is under license. Other trademarks and trade names are those of their respective owners.

The model and serial number of the product are located on the back and on one side of the product. Record them below in case you ever need service.

Model _____

Serial no. _____