LG

MFL72063264 24 04 REV02

OLED42C4* OLED65C4*
OLED48C4* OLED77C4*
OLED55C4* OLED83C4*





www.lg.com



42”

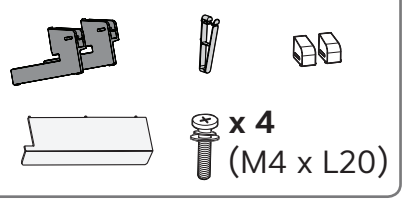

x 4
(M4 x L20)

55/65/77”

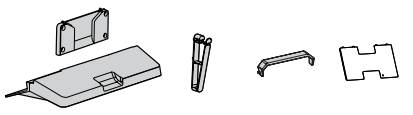

a x 4
(M5 x L20)

b x 4
(M4 x L16)

48”

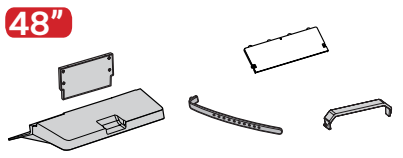

a x 4
(M5 x L20)

b x 4
(M4 x L16)

83”

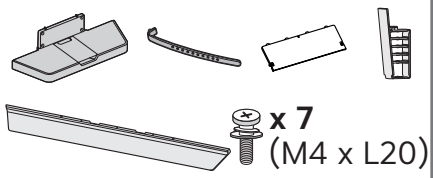

x 7
(M4 x L20)

42/48”

1

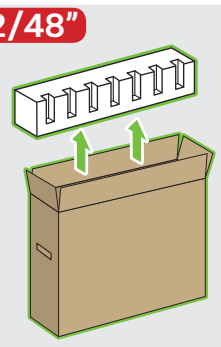

55/65/77”

1

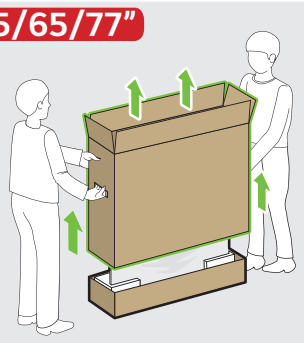

83”

1

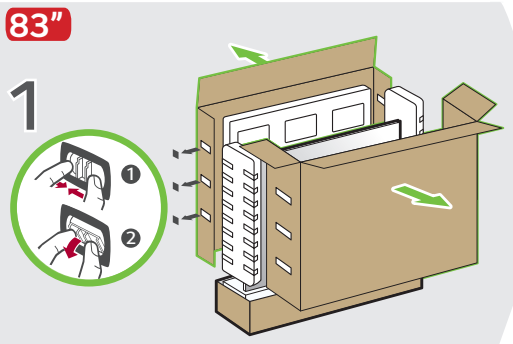

2

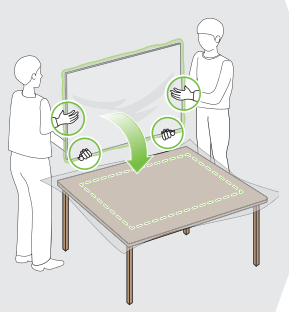

3



42”

1

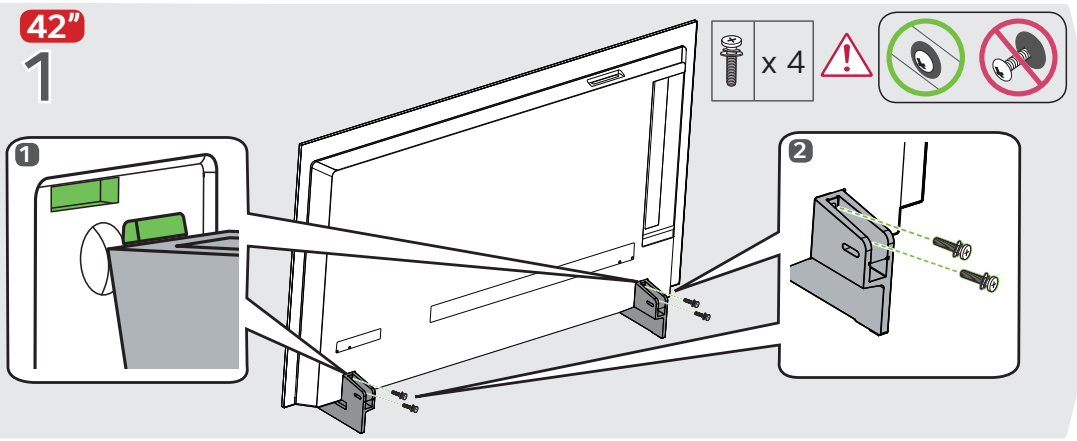

x 4

2

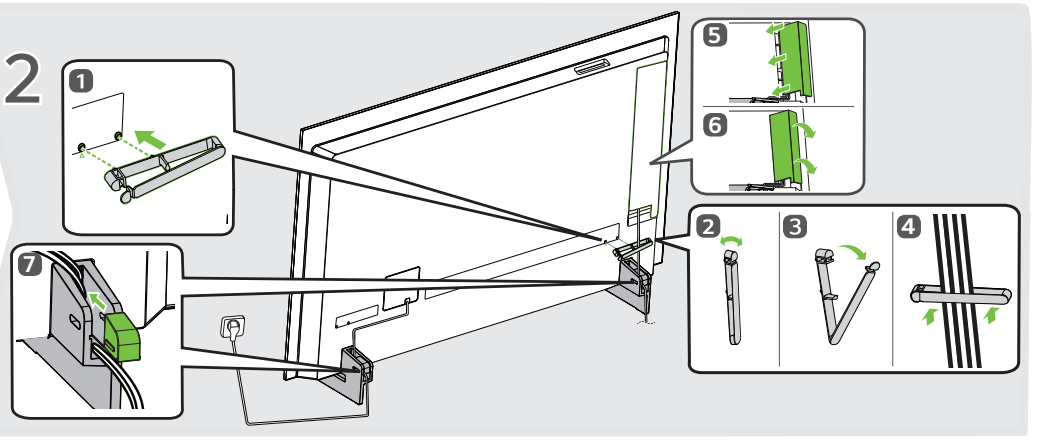

48”

1

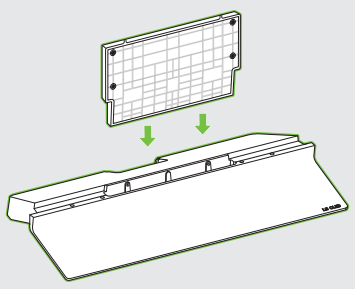

2

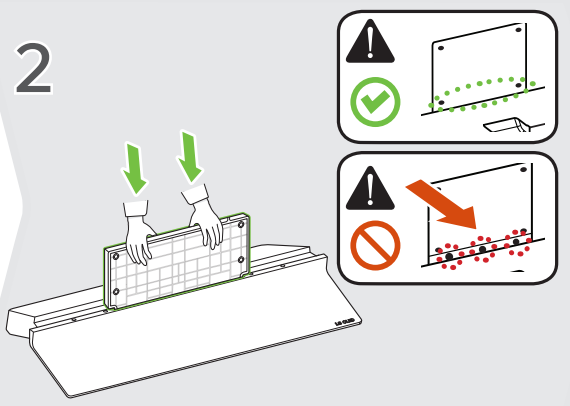

3

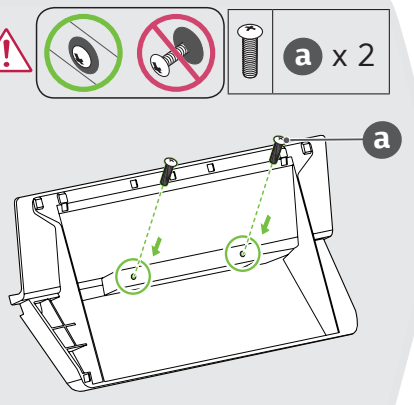

a x 2

4

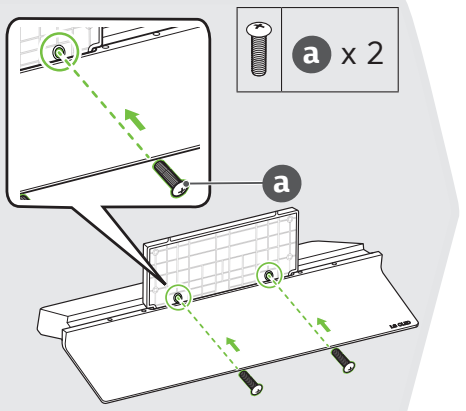

a x 2

5

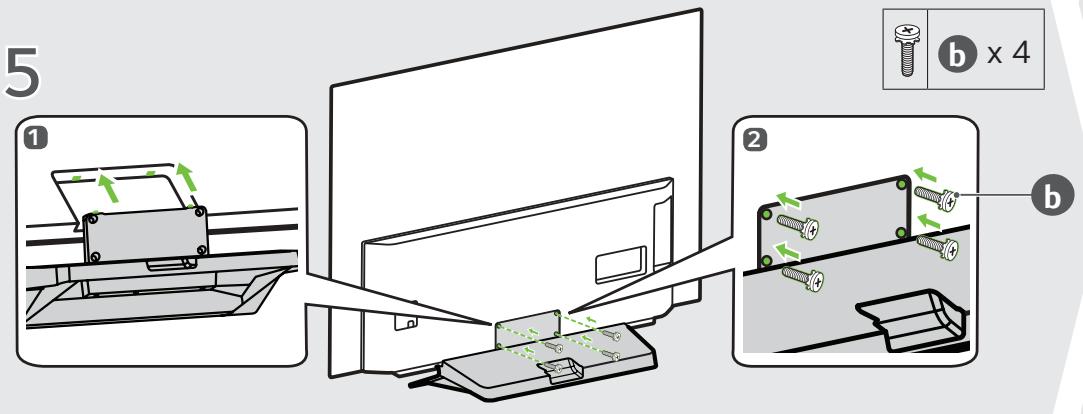

b x 4

6

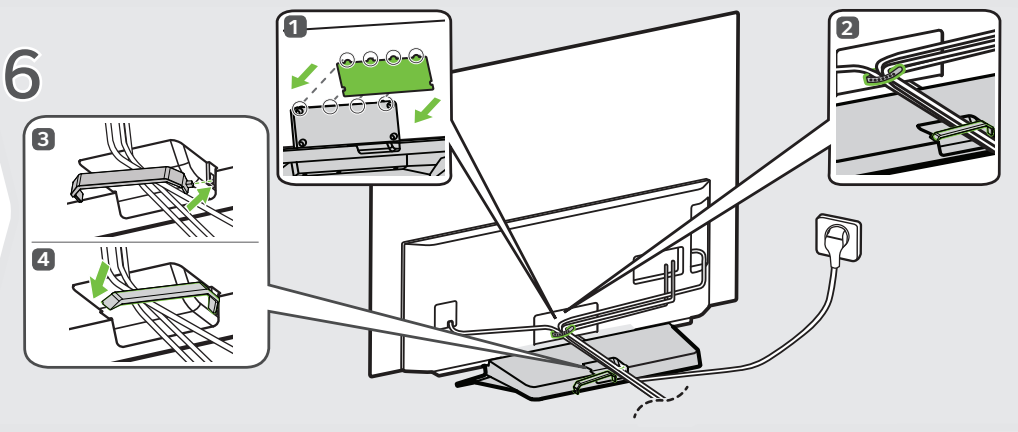

55/65/77”

1

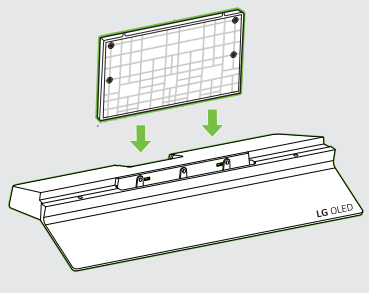

2

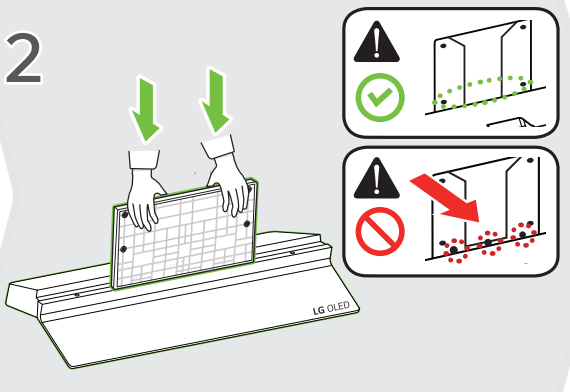

3

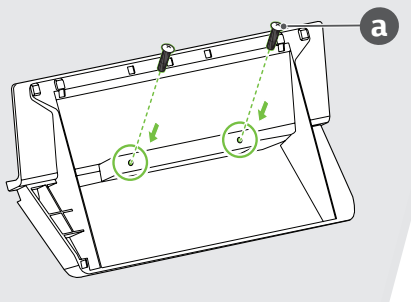

a x 2

4

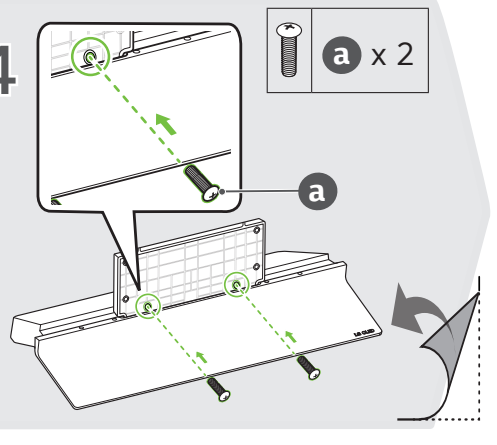

a x 2

55/65/77”

5

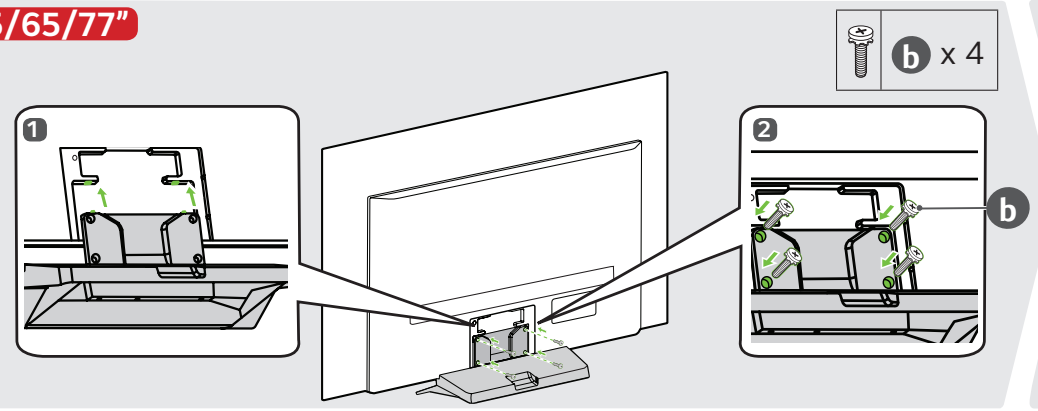

6

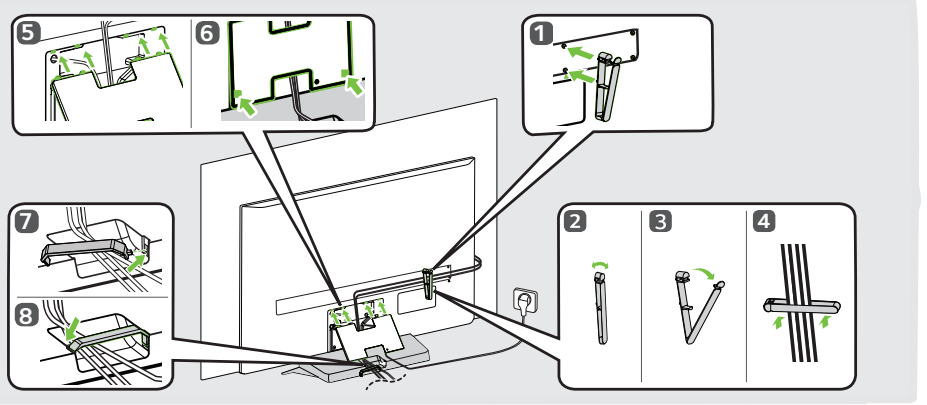

83”

1

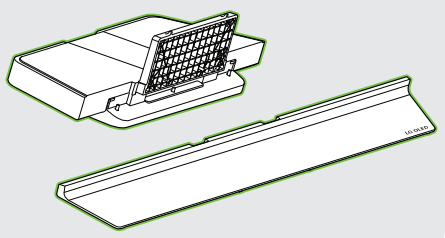

2

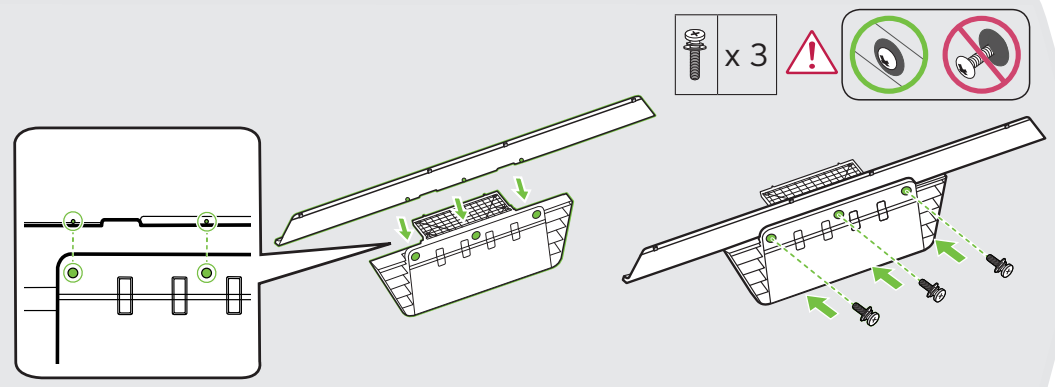

3

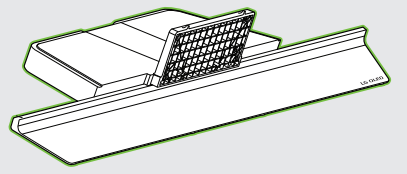

4

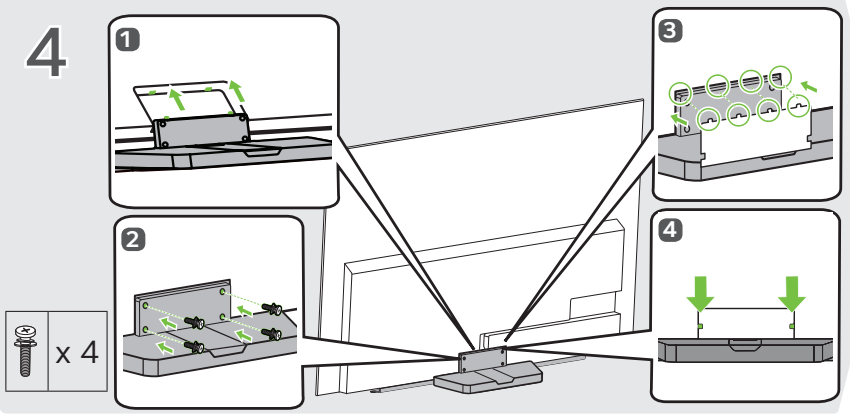

5

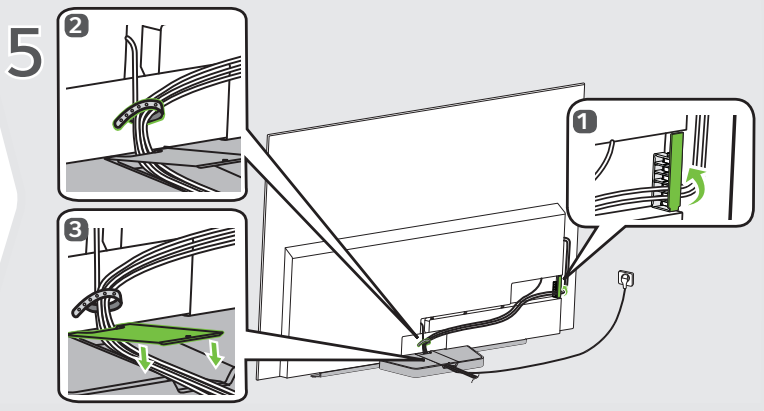

42/48/55/65/77/83”

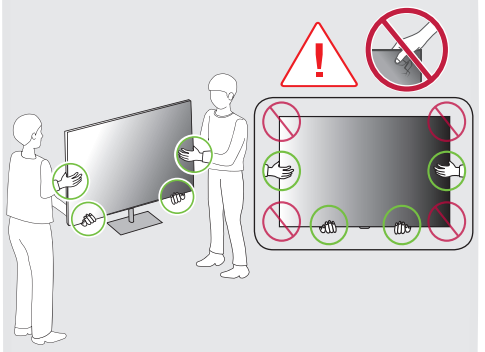

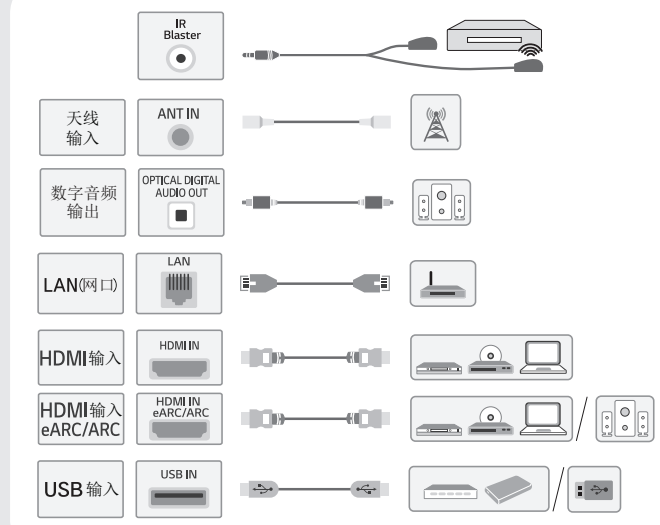

42/48”

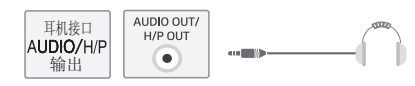

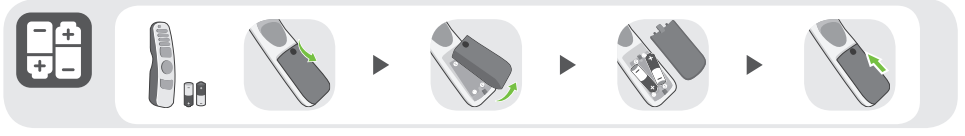

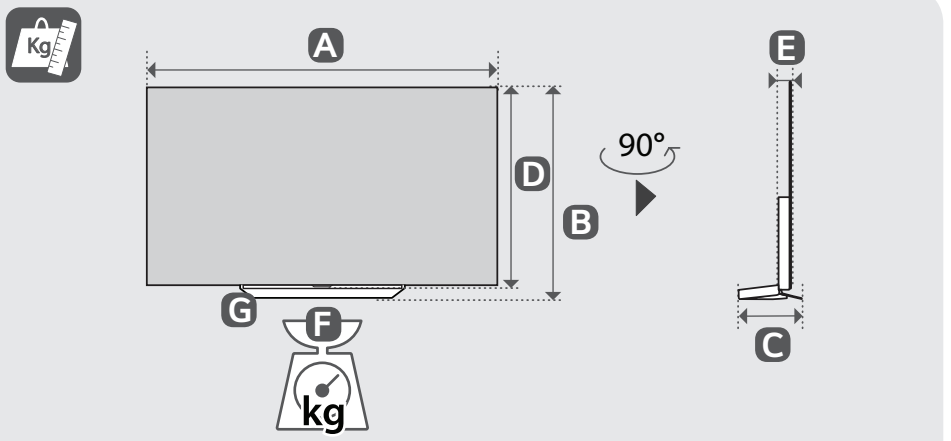

	A	B	C	D	E	F	F-G
	(毫米/mm)					(千克/kg)	
OLED42C4*	932	577	170	540	41.1	10.1	9.8
OLED48C4*	1071	675	230	618	46.9	16.8	14.9
OLED55C4*	1222	757	230	703	45.1	16.0	14.1
OLED65C4*	1441	880	230	826	45.1	18.5	16.6
OLED77C4*	1711	1035	267	982	47.1	27.1	23.5
OLED83C4*	1851	1092	279	1062	55.3	41.6	32.3

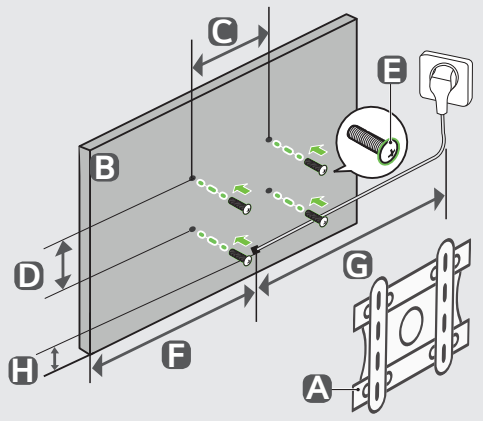

A	B	C x D (毫米/mm)	E	F (毫米/mm)	G (米/m)	H (毫米/mm)
OLW480B	**OLED42C4***	300 x 200	M6	263	≧1.5	113
	OLED48C4*			126		118
	OLED55C4*			523		121
	OLED65C4*			633		121
	OLED77C4*			769		121
WB24GCB	**OLED83C4***	400 x 400		902		113

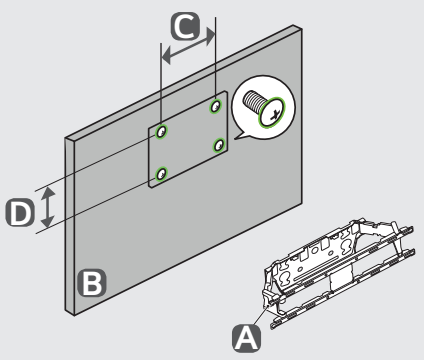

A	B	C x D (毫米/mm)
WB21EB	**OLED83C4***	180 x 55

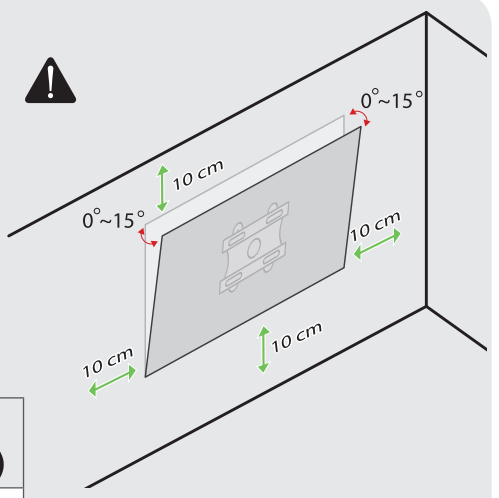

* : 0~9, A~Z