OWNER'S MANUAL

Mini Hi-Fi System

Please read this manual carefully before operating your set and retain it for future reference.

MODEL
CJ44 (CJ44, CJS45F)

Note
This product has no disc drive.

www.lg.com

2407_Rev01

Copyright © 2024 LG Electronics Inc. All Rights Reserved.

Safety Information

CAUTION: TO REDUCE THE RISK OF ELECTRIC SHOCK DO NOT REMOVE COVER (OR BACK). NO USER-SERVICEABLE PARTS INSIDE. REFER SERVICING TO QUALIFIED SERVICE PERSONNEL.

This lightning flash with arrowhead symbol within an equilateral triangle is intended to alert the user to the presence of uninsulated dangerous voltage within the product's enclosure that may be of sufficient magnitude to constitute a risk of electric shock to persons.

The exclamation point within an equilateral triangle is intended to alert the user to the presence of important operating and maintenance (servicing) instructions in the literature accompanying the product.

WARNING: TO PREVENT FIRE OR ELECTRIC SHOCK HAZARD, DO NOT EXPOSE THIS PRODUCT TO RAIN OR MOISTURE.

CAUTION: The apparatus should not be exposed to water (dripping or splashing) and no objects filled with liquids, such as vases, should be placed on the apparatus.

WARNING: Do not install this equipment in a confined space such as a book case or similar unit.

CAUTION: Do not use high voltage products around this product. (ex. Electrical swatter) This product may malfunction due to electrical shock.

CAUTION: Do not block any ventilation openings. Install in accordance with the manufacturer's instructions.
Slots and openings in the cabinet are provided for ventilation and to ensure reliable operation of the product and to protect it from over heating. The openings should never be blocked by placing the product on a bed, sofa, rug or other similar surface. This product shall not be placed in a built-in installation such as a bookcase or rack unless proper ventilation is provided or the manufacturer's instruction has been adhered to.

NOTICE: For safety marking information including product identification and supply ratings, please refer to the main label on the bottom or the other surface of the product.

CAUTION concerning the Power Cord

Install this apparatus in a location where the power plug can be easily unplugged and plugged in. If there is a fire or problem with this apparatus, unplug it quickly.

Check the specification page of this owner's manual to be certain of the current requirements.

Do not overload wall outlets. Overloaded wall outlets, loose or damaged wall outlets, extension cords, frayed power cords, or damaged or cracked wire insulation are dangerous. Any of these conditions could result in electric shock or fire. Periodically examine the cord of your device, and if its appearance indicates damage or deterioration, unplug it, discontinue use of the device, and have the cord replaced with an exact replacement part by an authorized service center. Protect the power cord from physical or mechanical abuse, such as being twisted, kinked, pinched, closed in a door, or walked upon. Pay particular attention to plugs, wall outlets, and the point where the cord exits the device.

CAUTION: Be careful to make sure children do not put their hands or any objects into the *speaker duct.

* speaker duct: A hole for plentiful bass sound on speaker cabinet. (enclosure)

CAUTION: No naked flame sources, such as lighted candles, should be placed on the apparatus.

Symbols

~	Refers to alternating current(AC).
⎓	Refers to direct current(DC).
⧈	Refers to class II equipment.
⏻	Refers to stand-by.
I	Refers to "ON" (power).
ϟ	Refers to dangerous voltage.

Table of Contents

1 Getting Started

2 Safety Information
6 Unique Features
7 Playable file Requirement
7 – Music file requirement
7 – Compatible USB Devices
7 – USB device requirement
8 Remote control
10 Front panel
12 Rear Panel

2 Connecting

13 Connecting to speakers
13 – Attaching the speakers to the unit
14 Optional Equipment Connection
14 – AUX IN Connection
14 – PORT.IN Connection
14 – Listening to music from your portable player or external device
15 – USB Connection
15 – Antenna Connection

3 Operating

16 Basic Operations
16 – USB Operations
17 – Selecting a folder and an MP3/WMA file
18 – Deleting a file/folder or format
18 – AUTO DJ
19 Using a BLUETOOTH® wireless technology
19 – Listening to music stored on the Bluetooth devices
22 Using the LG XBOOM App
22 – About "LG XBOOM" App
22 – Install "LG XBOOM" App onto Your Bluetooth Device
23 – Activate Bluetooth with "LG XBOOM" App
24 Radio Operations
24 – Listening to the radio
24 – Improving poor FM reception
24 – Presetting the Radio Stations
24 – Deleting all the saved stations
25 Sound adjustment
25 – Setting the sound mode
26 Advanced Operations
26 – Recording to USB
28 – Programmed Playback

29 Other Operations
29 – Turn off the sound temporarily
29 – DEMO
29 – Resume stop
29 – Using Microphone
31 – Sleep Timer Setting
31 – Dimmer
32 – AUTO POWER On
32 – Auto function change
33 Setting the Clock
33 – Setting the Clock through "LG XBOOM" App
33 – Using your player as an alarm clock
34 LG Sound Sync
35 WIRELESS PARTY LINK Connection

4 Troubleshooting

36 Troubleshooting
36 – General

5 Appendix

38 General specifications
39 Speaker specifications
39 Trademarks and Licenses
40 Maintenance
40 – Handling the Unit

Unique Features

BLUETOOTH®

Listens to music stored on your **Bluetooth** device.

Portable In

Listens to music from your portable device.
(MP3, Notebook, etc.)

AUTO DJ

Blends the end of one song into the beginning of another for seamless playback.

USB Direct Recording

Records music to your USB device.

LG XBOOM

LG XBOOM is an app designed to let you take control of some of LG's latest audio devices. (Page 22)

LG Sound Sync

Controls volume level of this unit by the remote control of your LG TV that is compatible with LG Sound Sync.

Playable file Requirement

Music file requirement

MP3/WMA file compatibility with this unit is limited as follows.

- Sampling frequency : within 32 to 48 kHz (MP3), within 32 to 48 kHz (WMA)
- Bit rate : within 32 to 320 kbps (MP3), 40 to 192 kbps (WMA)
- Maximum files : 2,000
- Maximum folders : 200
- File extensions : ".mp3"/".wma"
- Certain MP3/WMA files may not be played depending on the type or format of the file.

Compatible USB Devices

- MP3 Player : Flash type MP3 player.
- USB Flash Drive :
  Devices that support USB2.0 or USB1.1.
- The USB function of this unit does not support all USB devices.

USB device requirement

- Devices which require additional program installation when you have connected it to a computer, are not supported.
- Do not extract the USB device while in operation.
- For a large capacity USB, it may take longer than a few minute to be searched.
- To prevent data loss, back up all data.
- If you use a USB extension cable or USB hub, the USB device is not recognized.
- Using NTFS file system is not supported.
  (Only FAT(16/32) file system is supported.)
- This unit recognizes up to 2,000 files.
- External HDD, Card readers, Locked devices, or hard type USB devices are not supported.
- USB port of the unit cannot be connected to PC. The unit cannot be used as a storage device.
- Some USB may not work with this unit.

Remote control

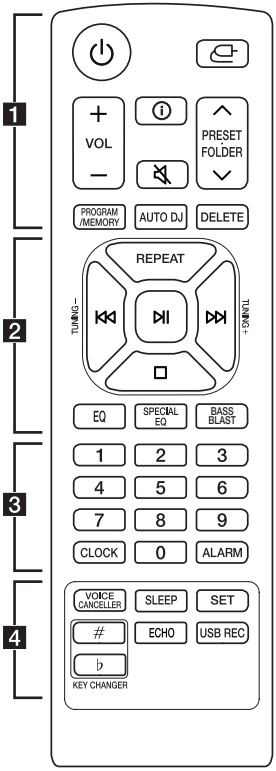

Replacement of battery

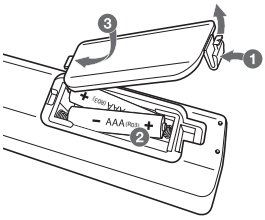

Remove the battery cover on the rear of the remote control, and insert the battery with ⊕ and ⊖ matched correctly.

Risk of fire or explosion if the battery is replaced by an incorrect type.

1

⏻ (Standby) : Turns the power on or off.

(Function) : Selects the function and input source.

Input source / Function	Display
USB	USB1 / USB2
AUX input	AUX
Portable input	PORTABLE
Bluetooth	BT
LG Sound Sync (Wireless)	LG TV
Radio	FM

VOL (Volume) **+/-** : Adjusts speaker volume.

ⓘ (Information) :
- Sees information about your music. An MP3 file often come with ID3 tag. The tag gives the Title, Artist, Album or Time information.
- Sees **Bluetooth** device name of the unit in BT READY.
- Sees the name of connected all **Bluetooth** device in **Bluetooth** mode.
- When these units are successfully connected each other in WIRELESS PARTY LINK mode, each of connected device names appears in the each unit.

(Mute) : Mutes the sound.

PRESET·FOLDER ∧/∨ :
- Chooses a preset number for a radio station. (Page 24)
- Searches for a folder of MP3/WMA files. When a USB containing MP3/WMA files in several folders is being played, press **PRESET·FOLDER ∧/∨** to select the folder you want to play.

PROGRAM/MEMORY :
- Stores radio stations. (Page 24)
- Deletes all the saved stations.
- Selects a programmed list mode. (Page 28)
- Makes the programmed list.

AUTO DJ : Selects the AUTO DJ mode. (Page 18)

DELETE :
- Deletes MP3/WMA files. (USB only) (Page 18)
- Deletes a song on the programmed list.

2

REPEAT : Listens to your files repeatedly or randomly.

⏮/⏭ (Skip/Search) :
- Skips backward or forward.
- Searches for a section within a file.

TUNING -/+ : Selects the radio stations.

⏯ (Play/Pause) :
- Starts or pauses playback.
- Selects stereo/mono.

⏹ (Stop) :
- Stops playback.
- Cancels DELETE function.

EQ : Chooses sound impressions.

SPECIAL EQ: Chooses special equalizer.

BASS BLAST: Select BASS effect directly.

3

0 to **9** numerical buttons : Selects numbered files or preset number.

CLOCK : Sets a clock and checks a time.

ALARM : With the ALARM function you can turn on USB play and tuner reception at a desired time.

4

VOICE CANCELLER : You can enjoy the function while playing the music, by reducing singer vocal of music in the various source.

SLEEP : Sets the system to turn off automatically at a specified time.
(Dimmer : The display window will be darkened by half.)

SET : Confirms the setting.

KEY CHANGER(# / ♭) : Changes the key to suit your vocal range.

ECHO : Selects ECHO mode.

USB REC : Records to USB.

Front panel

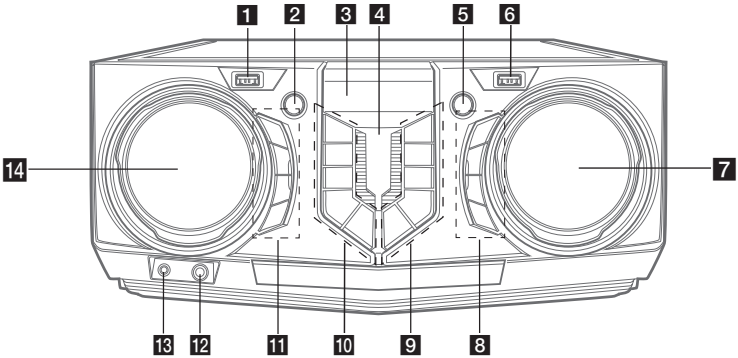

1 USB 1 Port
You can play sound files by connecting the USB device.

2 ⏻ (Standby)
Turns the power on or off.

3 Display window

4 (Remote sensor)

5 **WIRELESS LINK**
- Selects MAIN or OTHER on WIRELESS PARTY LINK mode.
- Enable or disable WIRELESS PARTY LINK mode.

6 USB 2 Port
You can play sound files by connecting the USB device.

7 **VOLUME**
Adjust speaker volume.

8 **MIC** (Microphone) **+/-**
Adjust microphone volume.

VOICE CANCELLER
You can enjoy the function while playing the music, by reducing singer vocal of music in the various source.

ECHO
Selects ECHO mode.

9 **F** (Function)
Selects the function and input source.

Input source / Function	Display
USB	USB1 / USB2
AUX input	AUX
Portable input	PORTABLE
Bluetooth	BT
LG Sound Sync (Wireless)	LG TV
Radio	FM

>II (Play/Pause)
- Starts or pauses playback.
- Selects stereo/mono.

>>I (Skip/Search)
- Searches forward.
- Searches for a section within a file.
- Selects the radio stations.

KEY CHANGER (# / ♭)
Changes the key to suit your vocal range.

10 USB REC / DEMO
- Records to USB.
- In power off status, if you press **USB REC / DEMO**, show demo mode.

□ (Stop)
Stops playback or cancels DELETE function.

|<< (Skip/Search)
- Skips backward.
- Searches for a section within a file.
- Selects the radio stations.

ⓘ (Information)
- Sees information about your music. An MP3 file often come with ID3 tag. The tag gives the Title, Artist, Album or Time information.
- Sees **Bluetooth** device name of the unit in BT READY.
- Sees the name of connected all **Bluetooth** device in **Bluetooth** mode.
- When these units are successfully connected each other in WIRELESS PARTY LINK mode, each of connected device names appears in the each unit.

AUTO DJ
Selects the AUTO DJ mode.
(Page 18)

11 EQ
Chooses sound impressions.

SPECIAL EQ / BASS BLAST
- Chooses special equalizer.
- Press and hold to select BASS effect directly.

SEARCH
Moves to folder or file in selection mode.

OK
Selects a folder when searching a file.

12 **MIC** (Microphone) jack

13 **PORT.** (Portable) **IN** jack

14 ↖SEARCH↗
- Searches a folder or a file.
- Turns clockwise or counterclockwise to control the EQ, SPECIAL EQ mode.

Rear Panel

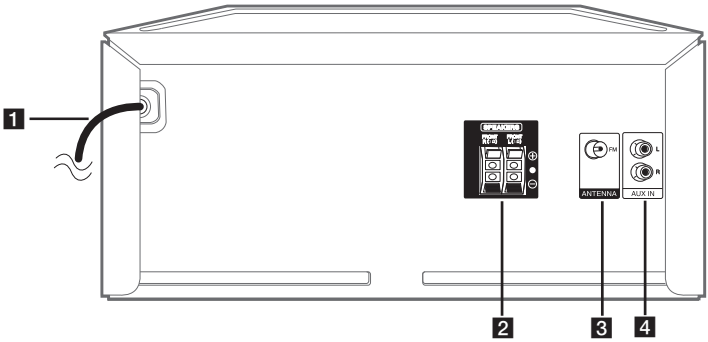

1 Power cord

2 **SPEAKERS** terminals

3 **ANTENNA** (FM)

4 **AUX IN** (L/R)
Connect an auxiliary device.

Connecting to speakers

Attaching the speakers to the unit

To connect the cable to the unit, press each plastic finger pad to open the connection terminals on the unit. Insert the wire and release the finger pad.

Connect the black of each wire to the terminals marked - (minus) and the other end to the terminals marked + (plus).

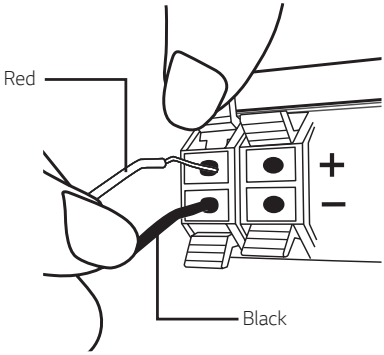

Caution

- When you connect the speakers to the unit, make sure to connect the speaker's cable to the corresponding speaker terminals.
- Check the volume level before playing music to prevent infirm, child, and pregnant women from being shocked by the sudden and loud sound from the unit.
- Do not use the unit in a limited space.
  It may damage a person's hearing. It is recommended to use it in a wide space.
- Be careful to make sure children do not put their hands or any objects into the *speaker duct.
  * speaker duct : A hole for plentiful bass sound on speaker cabinet (enclosure)
- Use the speaker supplied with this unit only. Using any other speaker may cause malfunction.
- The speakers contain magnet parts, so color irregularity may occur on the TV screen or PC monitor screen. Please use the speakers far away from either TV screen or PC monitor.

Optional Equipment Connection

AUX IN Connection

Connect an output of auxiliary device (Camcorder, TV, Player, etc) to the **AUX IN** (L/R) connector.

If your device has only one output for audio (mono), connect it to the left (white) audio jack on the unit.

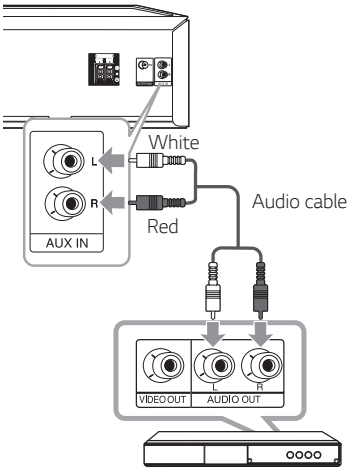

DVD, Blu-ray player etc.

PORT.IN Connection

Connect an output (earphone or line out) of portable device (MP3 or PMP etc.) to the **PORT.IN** (3.5 mm) connector.

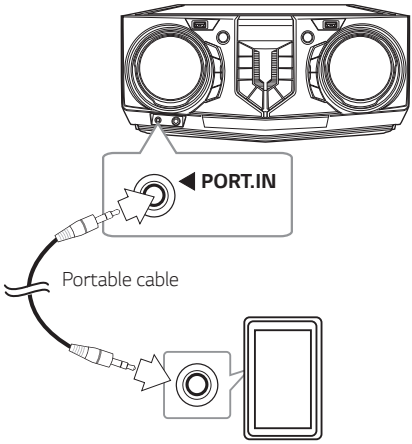

MP3 player etc.

Listening to music from your portable player or external device

The unit can be used to play the music from many types of portable player or external device.

1. Connect the portable player to the **PORT.IN** connector of the unit.

   Or

   Connect the external device to the **AUX IN** connector of the unit.
2. Turn the power on by pressing ⏻.
3. Press ⏍ on the remote control or **F** on the unit to select AUX or PORTABLE function.
4. Turn on the portable player or external device and start it playing.

Note

Automatically switches to the PORTABLE function when you connect the portable device to the **PORT.IN** connector.

USB Connection

Connect a USB device (or MP3 player, etc.) to the USB ports on the unit.

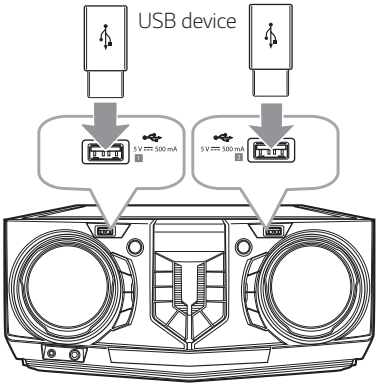

Note

Removing the USB Device from the unit :

1. Choose a different function/mode or press ☐ twice in a row.
2. Remove the USB device from the unit.

Antenna Connection

Connect the supplied FM antenna for listening to the radio.

Connect the FM wire antenna to the FM antenna connector.

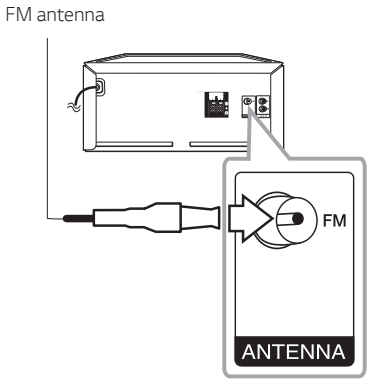

Note

Be sure to fully extend the FM wire antenna.

Basic Operations

USB Operations

1. Connect the USB device to the USB port.
2. Select USB function by pressing ⏍ on the remote control or **F** on the unit.

To	Do this
Stop	Press ☐.
Playback	Press ⏯ on the remote control or **>II** on the unit.
Pause	Press ⏯ on the remote control or **>II** on the unit during playback.
Searching for a section within a file	Press and hold ⏮/⏭ on the remote control or **I<< / >>I** on the unit during playback and release it at the point you want to listen to.
Selecting a file directly	Press **0** to **9** numerical buttons on the remote control to go to the desired file directly.
Skipping to the next/ previous file	- In stop status, Press ⏮ / ⏭ on the remote control or **I<< / >>I** on the unit to go to the next/previous file. - During playback, press ⏭ on the remote control or **>>I** on the unit to go to the next file. Playing less than 3 seconds, press ⏮ on the remote control or **I<<** on the unit to go to the previous file. Playing after 3 seconds, press ⏮ on the remote control or **I<<** on the unit to go to the beginning of the file.
Playing repeatedly or randomly	Press **REPEAT** on the remote control repeatedly. Refer to the note for details about the display change.

Note

- The display changes in the following order.

USB
*RPT 1
RPT**DIR
RPT ALL
RANDOM
OFF

*RPT : Repeat
**DIR : Directory

- When you play the programmed list, only RPT 1 and RPT ALL are available.
- Even after restarting the unit or switching one function to another, you can listen to music from the point where it's last been played.

Selecting a folder and an MP3/WMA file

On the unit

1. Press **SEARCH** and rotate **SEARCH** until a desired file appears. You can also search a folder if you press **SEARCH** again.
2. Press **OK** or **>II** to play the selected file. When you search a folder, press **OK** to select a file in the folder, then press **OK** or **>II** again. The selected file is played.

On the remote control

1. Press **PRESET·FOLDER ∧/∨** repeatedly until a desired folder appears.
2. Press **⊳II** to play it. The first file of the folder will be played.

Note

- USB Folders/Files are recognized as below.

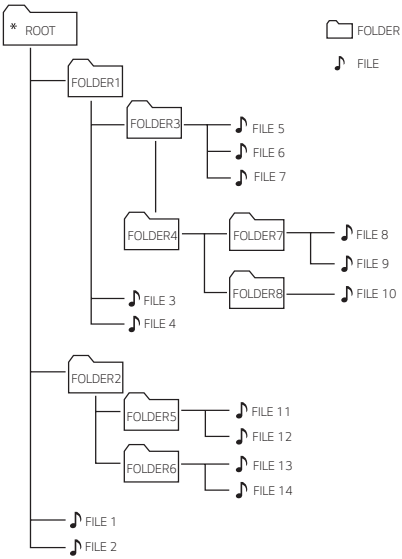

- If there is no file in a folder, the folder will not appear.
- Folders will be presented as the following order,
  ROOT → FOLDER 1 → FOLDER 3 → FOLDER 7 → FOLDER 8 → FOLDER 5 → FOLDER 6
- File will be played from ♪ file No.1 to ♪ file No.14 one by one.
- Files and folders will be presented in order recorded and may be presented differently according to the record circumstances.

*ROOT: The first screen you can see when a computer recognize the USB is "ROOT".

Deleting a file/folder or format

You can delete file, folder on your USB or format the USB.

1. Select USB function by pressing ⏍ on the remote control or **F** on the unit.
2. -Deletes file : Select the file you want to delete and select "DEL FILE" by pressing **DELETE** on the remote control.

   -Deletes folder : Select the folder you want to delete and select "DEL DIR" by pressing **DELETE** on the remote control.

   -Formats USB : Select "FORMAT" by pressing **DELETE** on the remote control to format the USB device.

   If you want to exit the current mode, press ☐.
3. To delete file/folder or format, press and hold **DELETE** on the remote control.

Caution

- Do not extract the USB device during operation. (play, delete, etc.)
- Regular back up is recommended to prevent data loss.
- The delete function may not be supported according to the USB status. (lock, etc.)

AUTO DJ

Auto DJ blends the end of one song into the beginning of another for seamless playback. It equalizes volume across files for uninterrupted playback.

Press **AUTO DJ** repeatedly, the display changes as followings.

AUTO DJ RANDOM → AUTO DJ SEQUENTIAL → AUTO DJ OFF

Mode	Display Window	Description
OFF	AUTO DJ OFF	-
RANDOM	AUTO DJ RANDOM	The music is played randomly on this mode.
REPEAT	AUTO DJ SEQUENTIAL	The music is played repeatedly on this mode.

Note

- AUTO DJ mode does not support searching for a section within a file or to play repeatedly or randomly.
- If you move to other functions or stop the music using ☐ on AUTO DJ mode, AUTO DJ will be disabled.
- AUTO DJ is not supported in the music file whose length is less than 60 seconds.
- Only AUTO DJ SEQUENTIAL is selected when played the programmed list.

Using a BLUETOOTH® wireless technology

About Bluetooth

Bluetooth is wireless communication technology for short range connection.

The sound may be interrupted when the connection interfered by the other electronic wave or you connect the **Bluetooth** in the other rooms.

Connecting individual devices under **Bluetooth** wireless technology does not incur any charges. A mobile phone with **Bluetooth** wireless technology can be operated via the Cascade if the connection was made via **Bluetooth** wireless technology.

- Available Devices : Smart phone, MP3, Notebook, etc.
- Version : 4.0
- Codec : SBC

Bluetooth Profiles

In order to use **Bluetooth** wireless technology, devices must be able to interpret certain profiles. This unit is compatible with following profile.

A2DP (Advanced Audio Distribution Profile)

Listening to music stored on the Bluetooth devices

Pairing your unit and Bluetooth device

Before you start the pairing procedure, make sure the **Bluetooth** feature is activated on your **Bluetooth** device. Refer to your **Bluetooth** device's user guide. Once a pairing operation is performed, it does not need to be performed again.

1. Turn on the unit.

Note

When Bluetooth connection lock is activated, you can search **Bluetooth** device in BT function.

2. Operate the **Bluetooth** device and perform the pairing operation. When searching for this unit with the **Bluetooth** device, a list of the devices found may appear in the **Bluetooth** device display depending on the type of **Bluetooth** device. Your unit appears as "LG CJ44 (XX)".

Note

- XX means the last two digits of **Bluetooth** address. For example, if your unit has a **Bluetooth** address such as 9C:02:98:4A:F7:08, you will see "LG CJ44 (08)" on your **Bluetooth** device.
- Depending on the **Bluetooth** device type, some devices may have a different pairing process. Enter the PIN code (0000) as needed.
- You can connect this unit with up to 3 **Bluetooth** devices simultaneously using the same method as described above, only in the **Bluetooth** function.
- The multi pairing connection is only supported on Android devices. (Multi pairing connection may not be supported depending on the connected device specifications.)
- Removable/detachable **Bluetooth** devices (Ex : Dongle etc.) will not support multi pairing.

3. When this unit is successfully connected with your **Bluetooth** device, "PAIRED" appears on the display window and change to **Bluetooth** device name soon. Then "BT" will appear on the display window.

Note

- "PAIRED" will momentarily appear on the display when you connect other devices for multi pairing
- If the device name is unavailable, "_" will be displayed.

4. Listen to music.
   To play a music stored on your **Bluetooth** device, refer to your **Bluetooth** device's user guide.

Note

- When using **Bluetooth** technology, you have to make a connection between the unit and the **Bluetooth** device as close as possible and keep the distance.
  However, it may not work well in certain situations as described below:
  - There is a obstacle between the unit and the **Bluetooth** device.
  - There is a device using same frequency with **Bluetooth** technology such as a medical equipment, a microwave or a wireless LAN device.
- You should connect your **Bluetooth** device to this unit again when you restart it.
- Even if this unit connected up to 3 **Bluetooth** devices in the **Bluetooth** mode, you can play and control music by using only one of the connected devices.

Controls connected Bluetooth device

You can control connected **Bluetooth** device by the unit; play, pause, stop, skip.

Note

- Only Android OS and iOS is available to use this function.
- This function may not be supported depending on the **Bluetooth** device, or operated differently.

Bluetooth connection lock (BT LOCK)

You can limit **Bluetooth** connection to only BT (**Bluetooth**) and LG TV function to prevent unintended **Bluetooth** connection.

To turn on this function, press and hold ▷II on the remote control or >II on the unit for about 5 seconds in BT (**Bluetooth**) function.
"BT LOCK" appears then you can limit **Bluetooth** connection.

To turn off this function, press and hold ▷II on the remote control or >II on the unit for about 5 seconds in BT (**Bluetooth**) function.
"BT UNLOCK" appears.

Note

- The sound may be interrupted when the connection has interference from other electronic devices.
- Depending on the type of the device, you may not be able to use the **Bluetooth** function.
- You can enjoy wireless system using phone, MP3, Notebook, etc.
- The more distance between the unit and the **Bluetooth** device, the lower the sound quality becomes.
- **Bluetooth** connection will be disconnected when the unit is turned off or the **Bluetooth** device gets far from the unit.
- When **Bluetooth** connection is disconnected, connect the **Bluetooth** device to the unit again.
- When a **Bluetooth** device is not connected, "BT READY" appears on the display window.
- When you use **Bluetooth** function, adjust the volume to a proper level on the **Bluetooth** device.
- If a **Bluetooth** device is connected when using LG TV, LG TV is disconnected and the **Bluetooth** device is connected.
- When you connect **Bluetooth** device (iOS device etc.) to this unit or operate the device, the volume level can be synchronized with each other.
- **Bluetooth** connection will be disconnected when you change the **Bluetooth** function to the others. In "LG XBOOM" app connection, only one device which you are playing keeps **Bluetooth** connection. You can control the **Bluetooth** device with this unit but you cannot use sound output.
- When entering **Bluetooth** function, this unit automatically connect to **Bluetooth** device which is connected the last.
  (Auto connection may not be supported depending on the connected device specifications.)

Using the LG XBOOM App

Note

- Only Android OS is available to use "LG XBOOM" app with this unit.
- It is recommended to use the latest version of app.

About "LG XBOOM" App

"LG XBOOM" app brings a suite of new features to this unit.

To enjoy more features, you are recommended to download and install free "LG XBOOM" app.

Here is introduce a few of the many features of "LG XBOOM" app.

Multi Juke box : Your entertainment increases three fold when you connect up to 3 **Bluetooth** phones at the same time. Play music from all three phone and create a customized playlist from all the phones.

Install "LG XBOOM" App onto Your Bluetooth Device

There are two ways to install "LG XBOOM" app onto your **Bluetooth** device.

Install "LG XBOOM" App through QR code

1. Install "LG XBOOM" app through QR code. Use the scanning software to scan the QR code.

2. Tap an icon for installation.

Note

- Make sure that your **Bluetooth** device is connected to the Internet.
- Make sure that your **Bluetooth** device has a scanning software application. If you don't have one, download one from "Google Android Market (Google Play Store)".
- Depending on the area, QR code may not work.

Install “LG XBOOM” App through “Google Android Market (Google Play Store)”

1. Tap the “Google Android Market (Google Play Store)” icon.
2. In the search bar, type in the “LG XBOOM” and search it.
3. In the search result list, find and tap “LG XBOOM” to start downloading **Bluetooth** app.
4. Tap an icon for installation.

Note

- Make sure that your **Bluetooth** device is connected to the Internet.
- Make sure that your **Bluetooth** device is equipped with “Google Android Market (Google Play Store)”.

Activate Bluetooth with “LG XBOOM” App

“LG XBOOM” app helps to connect your **Bluetooth** device to this unit.

1. Tap “LG XBOOM” app icon on the home screen to open “LG XBOOM” app, and go to the main menu.
2. If you want to get more information to operate, tap [Setting] and tap [Help] menu.

Note

- “LG XBOOM” app will be available in the software version as follow;
  - Android O/S : Version 6.0 or higher
  - Minimum supported versions for each OS may change later.
- If you use “LG XBOOM” app for operation, there would be some differences between “LG XBOOM” app and the supplied remote control. Use the supplied remote control as necessary.
- Depending on the **Bluetooth** device, “LG XBOOM ” app may not work.
- After connection of “LG XBOOM” app, music may be output from your device. In this case, try connecting procedure again.
- If you operate the other applications or change the settings on your **Bluetooth** device while using “LG XBOOM” app, “LG XBOOM” app may operate abnormally.
- When “LG XBOOM” app operates abnormally, check your **Bluetooth** device and the connection of “LG XBOOM” app and then try to connect again.
- Depending on the smart phone's operating system, you have some differences for “LG XBOOM” operation.
- Check **Bluetooth** setting on your **Bluetooth** device if “LG XBOOM” app connection does not work well.

Radio Operations

Be sure that both FM aerials are connected.
(Page 15)

Listening to the radio

1. Press on the remote control or **F** on the unit until FM appears in the display window.
   The last received station is tuned in.
2. Auto tuning :
   Press and hold **TUNING -/+** on the remote control or **I<< / >>I** on the unit for about two seconds until the frequency indication starts to change, then release. Scanning stops when the unit tunes in a station.

   Or

   Manual tuning :
   Press **TUNING -/+** on the remote control or **I<< / >>I** on the unit repeatedly.
3. Adjust the volume by pressing **VOL +/-** on the remote control or rotating volume knob on the unit repeatedly.

Improving poor FM reception

Press **>I** on the remote control or **>II** on the unit. This will change the tuner from stereo to mono and usually improve the reception.

Presetting the Radio Stations

You can preset 50 stations for FM.
Before tuning, make sure to turn down the volume.

1. Press on the remote control or **F** on the unit until FM appears in the display window.
2. Select the desired frequency by pressing **TUNING -/+** on the remote control or **I<< / >>I** on the unit.
3. Press **PROGRAM/MEMORY** on the remote control. A preset number will blink in the display window.
4. Press **PRESET·FOLDER ∧ / ∨** on the remote control to select the preset number you want.
5. Press **PROGRAM/MEMORY** on the remote control. The station is stored.
6. Repeat steps 2 to 5 to store other stations.
7. To listen a preset station, press **PRESET·FOLDER ∧ / ∨** or **0** to **9** numerical buttons on the remote control.

Deleting all the saved stations

1. Press and hold **PROGRAM/MEMORY** on the remote control for two seconds.
   "ERASEALL" will flash up on the unit display.
2. Press **PROGRAM/MEMORY** on the remote control to erase all the saved radio stations.

Sound adjustment

Setting the sound mode

This system has a number of pre-set surround sound fields. The displayed items for the Equalizer may be different depending on sound sources and effects.

You can select a desired sound mode by using **EQ**.

On Display	Description
BASS (BASS BLAST)	Reinforces the treble, bass and surround sound effect.
POP CLASSIC ROCK JAZZ	This program lends an enthusiastic atmosphere to the sound, giving you the feeling you are at an actual rock, pop, jazz or classic concert.
FOOT BALL	You can enjoy the sound effect FOOTBALL STADIUM.
STANDARD	You can enjoy optimized sound.

You can select a desired sound mode by using **SPECIAL EQ** on the remote control or **SPECIAL EQ / BASS BLAST** on the unit.

On Display	Region	Description
FUNK, REGUETON, SAMBA, MERENGUE, AXE, SALSA, SERTANEJ, FORRO	Latin America	Optimized sound effect for the music genre preferred in each region.
ARABIC	Middle East	
DANGDUT	Indonesia	
AFRO	Africa	
INDIA	India	

Note

- On some speakers, sound may not be heard or heard in low sound depending on the sound mode.
- By pressing **BASS BLAST** on the remote control or pressing and holding **SPECIAL EQ / BASS BLAST** on the unit for 3 seconds you can directly select BASS (BASS BLAST) effect.

Advanced Operations

Recording to USB

You can record a various sound source to USB. (USB1, AUX, PORTABLE, FM)

1. Connect the USB device to the unit.
2. Press ⏍ on the remote control or **F** on the unit to select a function you want to record.
3. Start the recording by pressing **USB REC** on the remote control or **USB REC / DEMO** on the unit.

Function	Status	Result
USB	Play/Pause	Recorded until stop
	Resume stop (Page 29)	Quick recorded the latest song
	Full stop	Quick recorded All songs In case below, scope is limited. - After File search (Page 17), quick recorded an indexed song - Only while the Folder name is displayed on the display window, quick recording All songs on Folder. (Folder Search Mode is released when there is no button input for a few seconds after entering the folder search mode.) (Page 17) - After the programmed list (Page 28), quick recorded All songs of the programmed list
AUX, PORTABLE, FM	-	Recorded until stop

- If you connect both USB1 and USB2, press **USB REC** on the remote control or **USB REC / DEMO** on the unit when USB1 or USB2 which you want to record blinks in the display window.

4. To stop recording, press and hold **USB REC** on the remote control or **USB REC / DEMO** on the unit for 3 seconds. Otherwise, the recording continues.

Pausing recording

During USB playback or pause, or external sound source recording, press **USB REC** on the remote control or **USB REC / DEMO** on the unit to pause recording. Press it again to restart recording.

Note

- VOICE CANCELLER or KEY CHANGER will be reset, if you use recording function during operating VOICE CANCELLER or KEY CHANGER.
- VOICE CANCELLER or KEY CHANGER can not be operated during recording.

To select recording bit rate

1. Press and hold **USB REC** on the remote control or **USB REC / DEMO** on the unit for 3 seconds.
2. Press ⏮/⏭ on the remote control or ⏮/⏭ on the unit to select a bit rate.
3. Press **USB REC** on the remote control or **USB REC / DEMO** on the unit to finish the setting.

The making of unauthorized copies of copy-protected material, including computer programs, files, broadcasts and sound recordings, may be an infringement of copyrights and constitute a criminal offense. This equipment should not be used for such purposes.
Be responsible
Respect copyrights

Note

- When you stop recording, the file that has been recorded at that time will be stored. (Except when recording MP3/ WMA files that are in stop status.)
- Do not remove the USB device or turn off the unit during USB recording. If does not, an incomplete file may be made and not deleted on PC.
- If USB recording does not work, the message like "NO USB", "ERROR", "USB FULL", "NOT SUPPORT" or "FILE MAX" is displayed on the display window.
- Multi card reader device or external HDD can not be used for USB recording.
- A file is recorded by about 512 Mbyte when you record for a long term.

Note

- You can record MIC. (Except when recording USB that are in stop status.)
- You can control recorded microphone sound according to microphone volume.
- You may not store more than 2,000 files.
- In case of the unsupported MP3/WMA file, the file recording may be stopped.
- When you are recording during playback, the sound now playing is output.
- It'll be stored as follows.

MP3/WMA	
Play or pause status FILE_REC AUDIO_0001 AUDIO_0002 ⋮	The other status FILE_REC ABC(File name) DEF(File name) ⋮
The other source*	**Tuner**
OTHERS_REC AUDIO_0001 AUDIO_0002 ⋮	TUNERS_REC AUDIO_0001_107-7FM ⋮

* : AUX and the like.

Tuner : The current recording frequency is shown.

Programmed Playback

The program function enables you to make a playlist of your favorite files from a USB device.
A program can contain 20 files for each media.
Possible to save a total of 40 files.

Making Programmed list

1. Press **PROGRAM / MEMORY** on the remote control in stop status.
2. Select a file by pressing ⏮/⏭ on the remote control.
3. Press **PROGRAM/MEMORY** on the remote control to save the file.
4. Repeat steps 2 - 3 to store other files.
   (You can modify the list by pressing **PRESET·FOLDER** ∧/∨ on the remote control to select the program number.)
5. Press **PROGRAM/MEMORY** on the remote control once again.

To play the programmed list, press ⏯ on the remote control after you make the list.

Note

When making or modifying the programmed list, REPEAT mode is off.

Editing Programmed list

1. Press **PROGRAM/MEMORY** on the remote control in stop status.
2. Press **PRESET·FOLDER** ∧/∨ or **PROGRAM/MEMORY** on the remote control to select a file to edit.
3. Press ⏮/⏭ on the remote control.
4. Press **PROGRAM/MEMORY** on the remote control once again.
5. Repeat 2 to 4 to store the other files.

To play the programmed list, press ⏯ on the remote control after you edit the list.

Deleting Programmed list

Deleting function only works in the edit mode.

1. Press **PROGRAM/MEMORY** on the remote control in stop status.
2. Select a song by pressing **PRESET·FOLDER** ∧/∨ or **PROGRAM/MEMORY** on the remote control repeatedly.
3. Press **DELETE** on the remote control while a song is selected.

Note

- Programmed list is switched off in the case below.
  - Changing to a different function.
  - Turning off and on the unit.
  - Operating the numeric buttons on the remote control.
  - Playing a file by using **SEARCH** and ↖SEARCH↗ on the unit.
- Programmed list is cleared in the case below.
  - Removing the USB device.
  - Deleting or recording music files in the USB device.
  - Unplugging the Power Cord.

Other Operations

Turn off the sound temporarily

Press 🔇 on the remote control to mute your sound.

You can mute your unit, for example, to answer the telephone, the "MUTE" will appear in the display window.

To cancel it, press 🔇 on the remote control again or change the volume level.

DEMO

In the power off state, press **USB REC / DEMO** on the unit once. The unit will power on and display the each of functions in the display window.

To cancel the DEMO function, press **USB REC / DEMO** on the unit once more.

Note

You can enjoy other functions during the DEMO, the DEMO will temporarily pause.
- Without input key in 10 sec, the DEMO will playback automatically.

Resume stop

The unit records the point where you pressed ☐ depending on the USB.

If you press ☐ twice, the unit will clear the stopped point.

Using Microphone

1. Connect your microphone to the MIC jack.
2. Play the music you want.
3. Sing along with the accompaniment.
   Adjusts the microphone volume by pressing **MIC +/-** on the unit.

Note

- When not using the microphone, set the MIC volume to minimum or turn off the MIC and remove the microphone from the MIC jack.
- If the microphone is set too near the speaker, a howling sound may be produced. In this case, move the microphone away from the speaker or decrease the sound level. by using the **MIC -** on the unit.
- If sound through the microphone is extremely loud, it may be distorted.
  In this case, press **MIC -** on the unit to minimum.
- You can give an echo effect to the sound from the microphones by pressing **ECHO**.

VOICE CANCELLER

You can enjoy the function while playing the music, by reducing singer vocal of music in the various source.

Press the **VOICE CANCELLER** and "ON" will appear in display window.

To cancel it, press **VOICE CANCELLER** again.

The quality of the VOICE CANCELLER may be different depending on the recording conditions of music files.

Note

- This function is available in the USB or BT (**Bluetooth**) function.
- If the function is not available, "NOT SUPPORT" appears in the display window.
- This function is available to use only when a microphone is connected.
- If a microphone is not connected, "INSERT MIC" appears in the display window.
- It is not available on the mono source.
- To initialize it, change the function or disconnect the microphone.
- This function may not be initialized depending on the status of connected devices.

KEY CHANGER

You can adjust the key to 9 steps (4 steps higher, 4 steps lower and the original key).

- To sharp the key one by one, press **KEY CHANGER** (#) repeatedly during playback.
- To flatten the key one by one, press **KEY CHANGER** (♭) repeatedly during playback.

Note

- This function is available USB or BT (**Bluetooth**) function.
- To initialize it, change the function, disconnect the microphone or change the music.
- This function may not be initialized depending on the status of connected devices.
- If the function is not available, "NOT SUPPORT" appears in the display window.
- If a microphone is not connected, "INSERT MIC" appears in the display window.

ECHO

When you connect your microphone to the MIC jack, you can give an echo effect to the sound from the microphones by pressing **ECHO**.

ECHO 1 → ECHO 2 → ECHO OFF

Note

If a microphone is not connected, "INSERT MIC" appears in the display window.

Sleep Timer Setting

Press **SLEEP** on the remote control repeatedly to select delay time between 10 and 180 minutes. After the delay time, the unit will be turned off.

To cancel the sleep function, press **SLEEP** on the remote control repeatedly until "SLEEP 10" appears, and then press **SLEEP** on the remote control once again while "SLEEP 10" is displayed.

Note

- You can check the remaining time before the unit is turned off. Press **SLEEP** on the remote control to check or change the remaining time.
- You can edit the remain time when displays the remaining time or "DIMMER".

Dimmer

Press **SLEEP** on the remote control once.
The display window will be darkened by half.

To cancel it, press **SLEEP** on the remote control repeatedly until dim off.

AUTO POWER On

This unit automatically turns on by an input source : LG TV or **Bluetooth**

When you turn on your TV connected to this unit, this unit recognizes the input signal and selects the suitable function. You can hear the sound from the unit.

If you try to connect your **Bluetooth** device, this unit turns on and connect your **Bluetooth** device.
You can play your music.

Note

- Depending on the connected device, this function may not operate.
- Depending on the connected device, the unit turns on but **Bluetooth** function may not be connected.
- If you disconnect **Bluetooth** connection by this unit, some **Bluetooth** devices try to connect to the unit continually. Therefore it is recommended to disconnect the connection before turning off the unit.
- If you try to connect to the "LG XBOOM" app, **Bluetooth** function of this unit is turned on.
- If you turn on the unit using LG TV or **Bluetooth** function, proper function of this unit is turned on.
- If you have already paired with this unit, automatically this unit can turn on by an input source when this unit is turned off.
- If you turn off the unit by pressing the power button for more than 5 seconds, Auto Power On function is disabled.
  To activate it, turn on the unit.

Auto function change

This unit recognizes input signals such as **Bluetooth** and LG TV or connected portable device, and then changes suitable function automatically.

When you try to connect Bluetooth device

When you try to connect your **Bluetooth** device to this unit, **Bluetooth** function is selected.
Play your music on the **Bluetooth** device.

When PORT.IN connection is connected

When you connect the portable device to the **PORT.IN** connector, PORTABLE function is selected.
Play your music on the portable device.

When LG TV is connected

When you turn on your LG TV connected by LG Sound Sync, this unit changes the function to LG TV.
You can hear the sound from your TV.

Note

- This function is not available during recording or deleting.
- This function only works with devices that were previously connected.
- If the **Bluetooth** connection lock function is set, **Bluetooth** and LG TV connection will be only available on **Bluetooth** and LG TV function.

Setting the Clock

1. Turn the unit on.
2. Press and hold **CLOCK** on the remote control.
3. Select time mode by pressing ⏮/⏭ on the remote control.
   - AM 12:00 (for an AM and PM display) or 0:00 (for a 24 hour display)
4. Press **SET** on the remote control to confirm your selection.
5. Select the hours by pressing ⏮/⏭ on the remote control.
6. Press **SET** on the remote control.
7. Select the minutes by pressing ⏮/⏭ on the remote control.
8. Press **SET** on the remote control.

Setting the Clock through "LG XBOOM" App

Install "LG XBOOM" app on your Android device. (Page 22-23)

Your unit's clock will be automatically synchronized with your device by activating **Bluetooth** connection through "LG XBOOM" app.

Using your player as an alarm clock

1. Turn the unit on.
2. Press and hold **ALARM** on the remote control.
3. Press ⏮/⏭ on the remote control to change the hours and minutes and press **SET** on the remote control to save.
4. Press ⏮/⏭ on the remote control to select function and press **SET** on the remote control to save.
   - Press ⏮/⏭ on the remote control to select a preset number when you select Tuner and then, press **SET** on the remote control.
     If there is no preset number, this step is skipped.
5. Press ⏮/⏭ on the remote control to change the volume and press **SET** on the remote control to save.

Note

- If you set the clock time, you can check the time by pressing **CLOCK** on the remote control even when the player is turned off.
- You can set alarm after you set the clock time.
- If you set the clock time and alarm, you can check the alarm setting information by pressing **ALARM** on the remote control even when the unit is turned off.
- You can select ALARM ON/OFF mode by pressing **ALARM** on the remote control.

LG Sound Sync

Sound Sync
Wireless

You can control some functions of this unit by your TV's remote control with LG Sound Sync. It is compatible with LG TV that supports LG Sound Sync. Make sure your TV has the LG Sound Sync logo.

Controllable function by LG TV's remote control : Volume up/down, mute

Refer to the TV's instruction manual for the details of LG Sound Sync.

1. Turn on the unit by pressing ⏻.
2. Press on the remote control or **F** on the unit until LG TV function is selected.
3. Set up the sound output of TV to listen to the sound through this unit :

   "PAIRED" appears on the display window for about 3 seconds and then you can see "LG TV" on the display window if the TV and this unit are connected normally.
   (Refer to the TV's instruction manual for the details of LG Sound Sync.)

Note

- You can also use the remote control of this unit while using LG Sound Sync. If you use TV's remote control again, the unit synchronizes with the TV.
- If the connection fails, check the conditions of this unit and your TV : power, function.
- Make sure of the condition of this unit and the connection in the cases below when using LG Sound Sync.
  - The unit is turned off.
  - Changing to a different function.
  - Disconnecting the wireless connection caused by interference or a distance.
- If you try to change the function on using the LG TV function, volume will be changed according to the LG TV volume level.
- Details of TV setting menu vary depending on the manufacturers or models of your TV.
- If you connect LG Sound Sync when "LG XBOOM" app is connected, control through the app is available.
- If you turned off the unit directly by pressing ⏻, LG Sound Sync will be disconnected. To use this function again, you should reconnect the TV and the unit.
- If an LG TV is connected when using **Bluetooth**, **Bluetooth** is disconnected and the LG TV is connected.
- The volume may be increased when the TV and this unit is connected by LG Sound Sync. Decrease the TV volume and then connect with this unit.
- When you turn on your LG TV connected by LG Sound Sync or enter LG TV function, this unit changes the function to LG TV automatically.
- You should set the TV Sound output manually depending on the LG TV version.

WIRELESS PARTY LINK Connection

The output sound of Ⓐ (MAIN) unit is expanded to Ⓑ (OTHER) unit.
It is compatible with unit that supports WIRELESS PARTY LINK.
The name of function about sound expansion between the compatible products wired or wirelessly was changed to PARTY LINK or WIRELESS PARTY LINK.

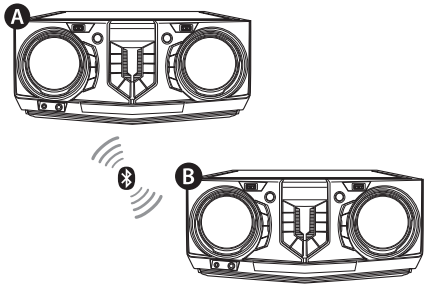

1. Press **WIRELESS LINK** on the unit.
   PARTY LINK MODE SELECT appears in the display window.
2. Press **WIRELESS LINK** on the unit to select MAIN or OTHER.
   - Ⓐ unit : Selects MAIN.
   - Ⓑ unit : Selects OTHER.

   Two units try to connect with each other.
3. When these units are successfully connected each other, each of connected device names appears in the each unit.

Note

- MAIN / OTHER are may be displayed to MASTER (Primary) / SLAVE (Secondary) in the existing products.
- If you using the LG Sound Sync, this function is not available. If you connect the LG TV function, "NOT SUPPORT" appears in the display window.
- You can use microphone in the OTHER unit only. In case of OTHER unit, some functions are supported only.
- When WIRELESS PARTY LINK is disconnected, OTHER unit is changed to BT (**Bluetooth**) function.
- If the connection is failed, "FAILED" appears in the display window.
- Mute function is synchronized with each other.
- WIRELESS PARTY LINK connection will be disconnected when you turn off the unit or press **WIRELESS LINK** on the unit.
- Sound of MAIN unit and OTHER unit may be different depending on playback status or source.
- Check the following information when connecting to **Bluetooth**.
  - You can connect only one **Bluetooth** device in the MAIN unit. You cannot connect **Bluetooth** device to the OTHER unit.
  - WIRELESS PARTY LINK connection is only supported on Android devices. (WIRELESS PARTY LINK connection may not be supported depending on the connected device specifications or OS.)
  - Removable/detachable **Bluetooth** devices (ex. Dongle etc.) will not support WIRELESS PARTY LINK connection.
  - When WIRELESS PARTY LINK is connected, **Bluetooth** connection is not available in status of recording or deleting.

Troubleshooting

General

Problem	Cause & Correction
The unit does not work properly.	• Turn off the power of this unit and the connected external device (TV, Woofer, DVD-player, Amplifier, etc.) and turn them on again. • Disconnect the power cord of this unit and the connected external device (TV, Woofer, DVD-player, Amplifier, etc.) and then try connecting again. • Previous setting may not be saved when device power is shut off.
No Power.	• The power cord is not plugged in. Plug in the power cord. • Check whether electricity failed. Check the condition by operating other electronic devices.
No sound.	• Check whether you select right function. Press function button and check the selected function. • Check to see if the Speakers are connected correctly. Speaker cables connected correctly.
Radio stations cannot be tuned in properly.	• The antenna is positioned or connected poorly. Connect the antenna securely. • The signal strength of the radio station is too weak. Tune to the station manually. • No stations have been preset or preset stations have been cleared (when being tuned by scanning preset channels). Preset some radio stations, see page 24 for details.

Problem	Cause & Correction
The remote control does not work properly.	• The remote control is too far from the unit. Operate the remote control within about 7 m. • There is an obstacle in the path of the remote control and the unit. Remove the obstacle. • The batteries in the remote control are exhausted. Replace the batteries with new ones.
LG Sound Sync does not work.	• Check whether your LG TV supports LG Sound Sync. • Check connection of LG Sound Sync. • Check sound setting of your TV and this unit.
USB is not recognized.	• Format the USB device and connect it again. When formatting the USB device, select the available file system. (Page 7)

General specifications

General	
Power requirements	Refer to the main label on the unit.
Power consumption	Refer to the main label on the unit.
Dimensions (W x H x D)	Approx. 350 mm x 163 mm x 251 mm
Operating temperature	5 °C to 40 °C
Operating humidity	60 %

Inputs	
Analog audio in (AUX IN)	1.0 Vrms (1 kHz, 0 dB), 75 Ω, RCA jack (L, R)
Portable in (PORT.IN)	500 mVrms (3.5 mm stereo jack) x 1
Microphone (MIC)	Sensitivity 20 mV (1 kHz), 6.3 mm jack x 1

Tuner	
FM Tuning Range	87.5 to 108.0 MHz or 87.50 to 108.00 MHz

System	
Frequency Response	100 to 20,000 Hz
Signal-to-noise ratio	More than 75 dB
Dynamic range	More than 75 dB
Bus Power Supply (USB)	5 V ⎓ 500 mA

Amplifier (RMS Output power)	
Total output	480 W RMS
Front	240 W RMS X 2 (3 Ω at 1 kHz, 20 % THD)

- Design and specifications are subject to change without notice.

Speaker specifications

Front speaker	
Type	2 Way 2 Speaker
Impedance	3 Ω
Rated Input Power	240 W RMS
Max. Input power	480 W RMS
Net Dimensions (W x H x D)	Approx. 266 mm x 314 mm x 234 mm

- Design and specifications are subject to change without notice.

Trademarks and Licenses

The **Bluetooth®** word mark and logos are registered trademarks owned by the Bluetooth SIG, Inc. and any use of such marks by LG Electronics is under license.
Other trademarks and trade names are those of their respective owners.

Maintenance

Handling the Unit

When shipping the unit

Please save the original shipping carton and packing materials. If you need to ship the unit, for maximum protection, re-pack the unit as it was originally packed at the factory.

Keeping the exterior surfaces clean

Do not use volatile liquids such as insecticide spray near the unit. Wiping with strong pressure may damage the surface. Do not leave rubber or plastic products in contact with the unit for a long period of time.

Cleaning the unit

To clean the player, use a soft, dry cloth. If the surfaces are extremely dirty, use a soft cloth lightly moistened with a mild detergent solution. Do not use strong solvents such as alcohol, benzine, or thinner, as these might damage the surface of the unit.

LG