LG

MFL05761402250 3REV00

65UA73*
75UA75*
86UA75*





www.lg.com



65″ 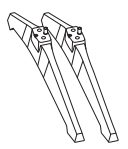 a x 4 (M4 x L16)

75″ 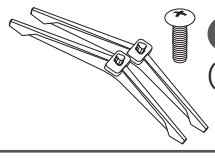 b x 4 (M5 x L24)

86″ 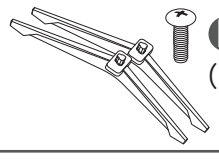 b x 8 (M5 x L24)

1 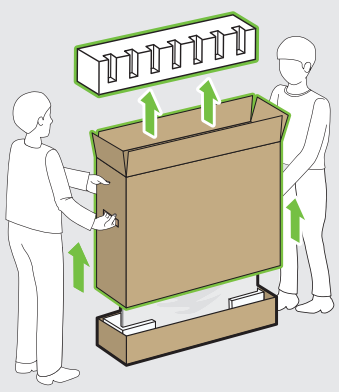

2 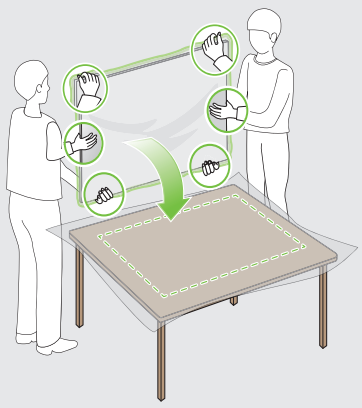

3 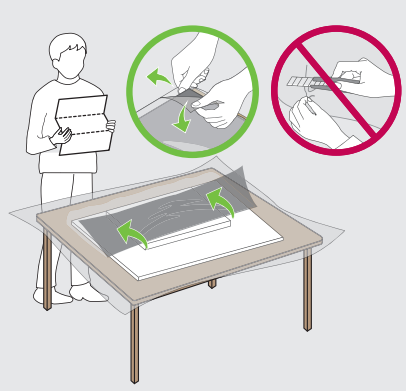

65″ 1 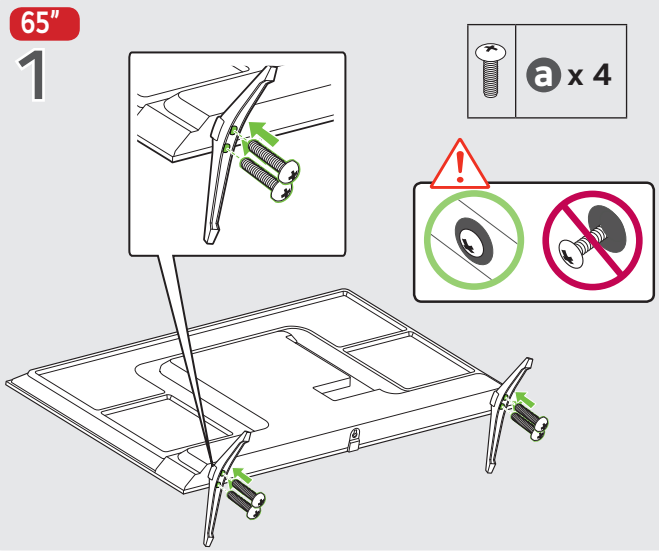

75″ 1 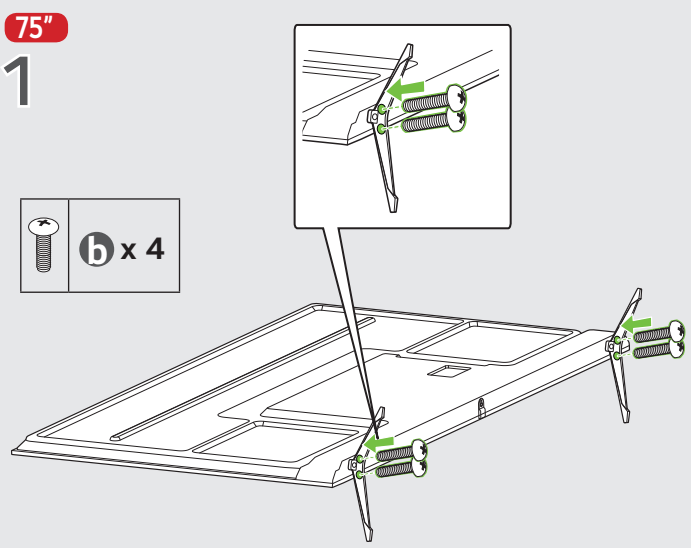

86″ 1 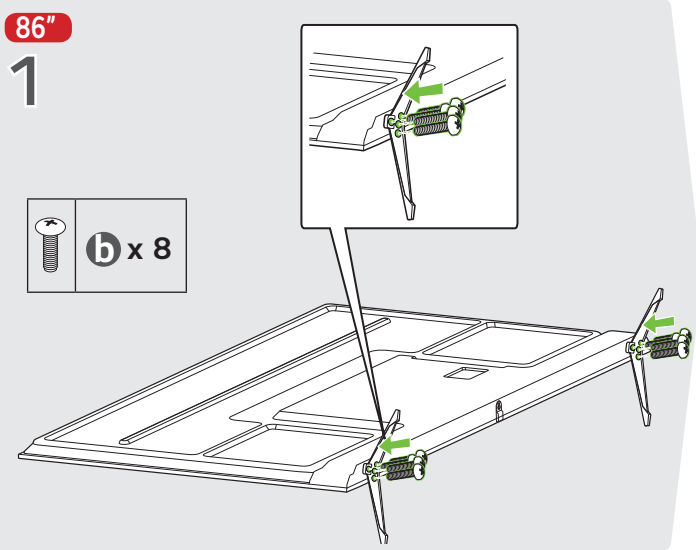

65/75/86″ 2 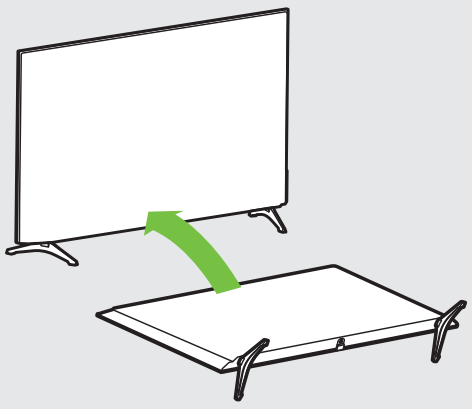

65″ 3 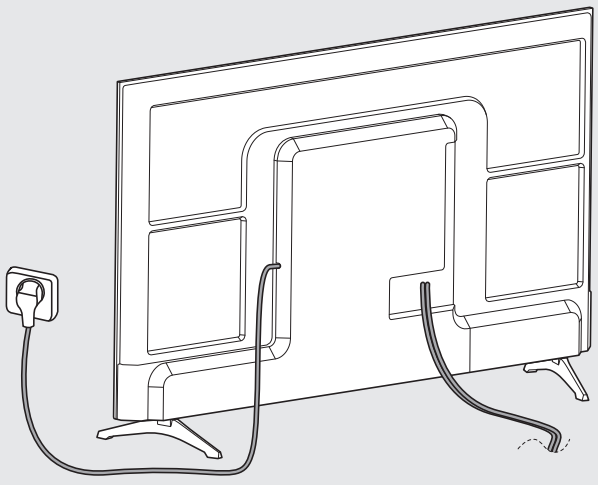

75″ 3 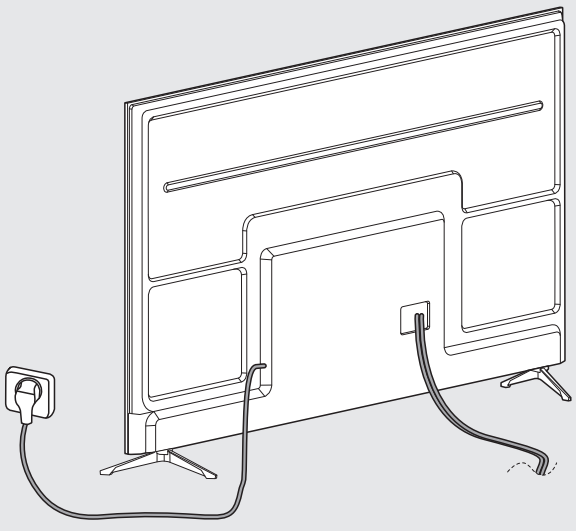

86″ 3 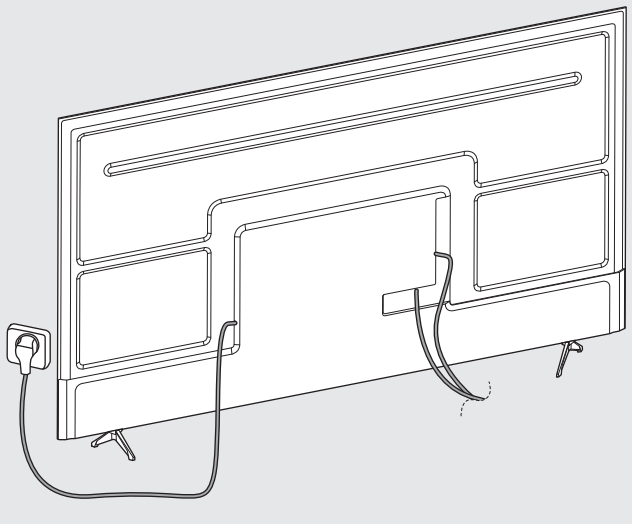

65/75/86″ 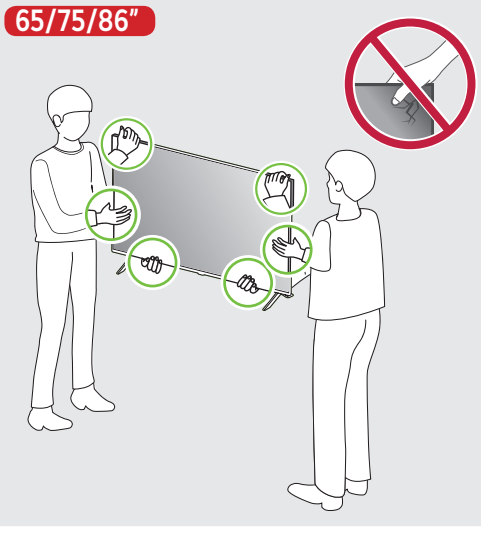

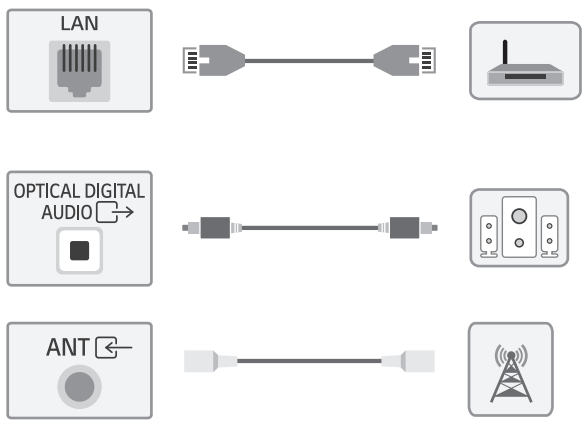

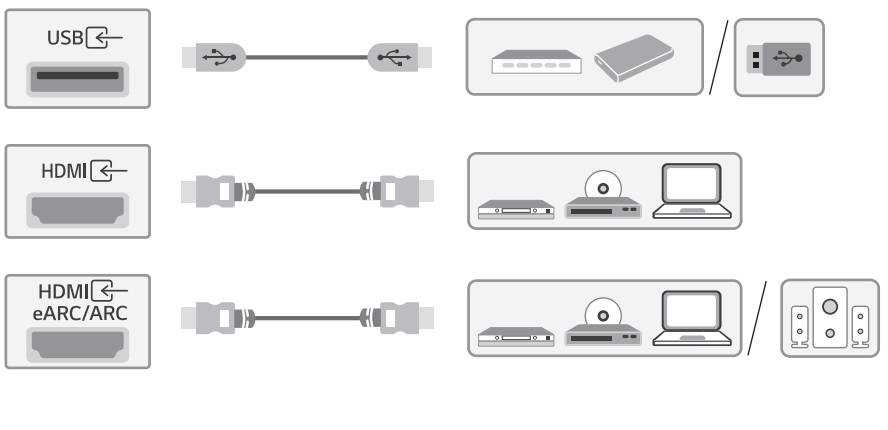

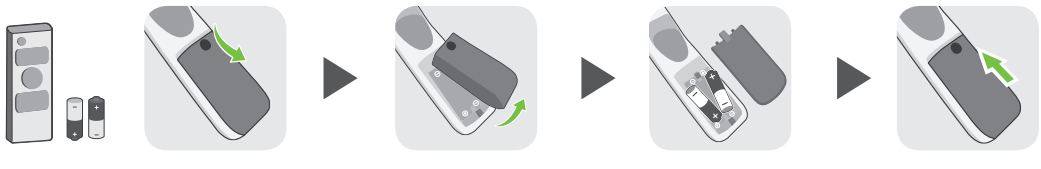

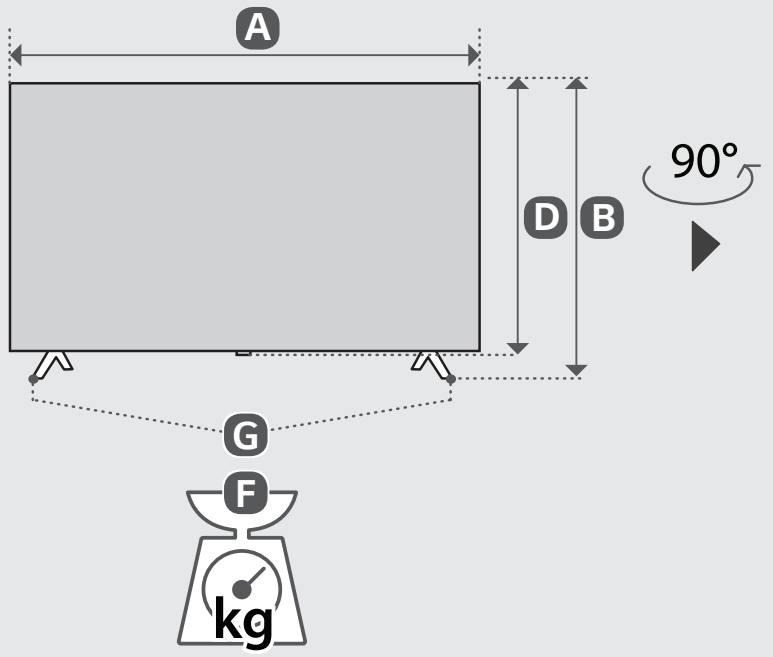

	A	B	C	D	E	F	F - G
	(mm)					(kg)	
65UA73*	1446	894	309	834	59.9	14.7	14.5
75UA75*	1668	1031	344	960	59.8	24	23.5
86UA75*	1920	1182	413	1102	59.8	34.2	33.6

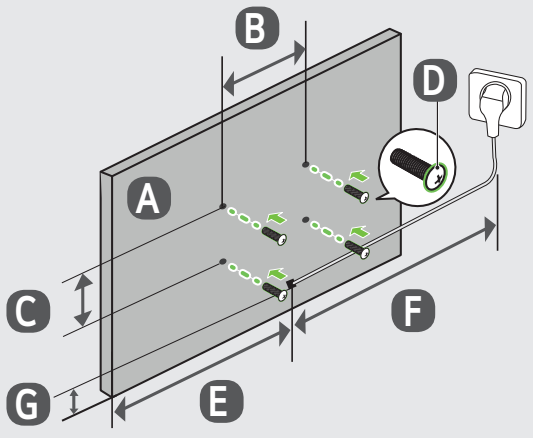

A	B x C (mm)	D	E (mm)	F (m)	G (mm)
65UA73*	200 x 300	M6	519	≧1.5	250
75UA75*	300 x 300		484		172
86UA75*	400 x 400	M8	595		294