INSTALLATION MANUAL

AIR-TO-WATER HEAT PUMP



Please read this installation manual completely before installing the product.

Original instruction

EN	**ENGLISH**	**IT**	**ITALIANO**	**ES**	**ESPAÑOL**	**FR**	**FRANÇAIS**
DE	**DEUTSCH**	**EL**	**ΕΛΛΗΝΙΚΑ**	**CZ**	**ČEŠTINA**	**NL**	**NEDERLANDS**
PL	**POLSKI**	**RO**	**ROMÂNĂ**	**PT**	**PORTUGUÊS**	**HU**	**MAGYAR**
BG	**БЪЛГАРСКИ**	**SR**	**SRPSKI**	**HR**	**HRVATSKI**	**SL**	**SLOVENŠČINA**
DA	**DANSK**	**SV**	**SVENSKA**				

Outdoor Unit	Indoor Unit
HM121 / 141 / 161HF UB60	PHCM0
HM123 / 143 / 163HF UB60	
HM093HFX UB60	
HM071 / 091HF UB40	
HM073 / 093HF UB40	
HM121 / 141 / 161HFD# UB41	
HM123 / 143 / 163HFD# UB41	
HM051 / 071 / 091HFD# UA41	
HM073 / 093HFD# UA41	

MFL68681864
Rev.01_111126

www.lg.com

Copyright © 2025 - 2026 LG Electronics Inc. All Rights Reserved.

TABLE OF CONTENTS

SAFETY INSTRUCTIONS 5
READ ALL INSTRUCTIONS BEFORE USE 5
WARNING INSTRUCTIONS 6
CAUTION INSTRUCTIONS 13
DELIVERED PARTS 25
GENERAL INFORMATION 27
Model information 27
Parts and Dimensions 28
Control Parts 33
Typical Installation Example 35
Cycle Diagram 36
Wiring Diagram 39
INSTALLATION OF OUTDOOR UNIT 44
Conditions to be considered when installing the outdoor unit 44
Minimum Operation Space 45
Safety Zone 46
Installation at Seaside 48
Seasonal wind and cautions in winter 49
Transporting the Unit 50
Foundation for Installation 52
INSTALLATION OF INDOOR UNIT 54
Conditions where Indoor Unit is Installed 54
ELECTRICAL WIRING 57
General considerations and warnings 57
WATER PIPING 73
Water Piping and Water Circuit Connection 73
How to install downward water piping 75
Water pump Capacity 78
Pressure Drop 78
Performance curve 80
Water Quality 82
Frost protection by antifreeze 82
Frost protection by antifreeze valve 83
Water Volume and Expansion Vessel Pressure 85
ACCESSORIES INSTALLATION 86
Before Installation 89
Thermostat 89
2nd Circuit 93
3rd Party Backup heater 96
3rd Party Boiler 99
3rd Party Controller 100

Meter Interface 101
Cloud Gateway 102
DHW Tank 103
Solar Thermal Kit 108
Dry Contact 110
External Controller - Setting up programmable digital input operation 112
Solar pump 113
External pump 114
Wi-Fi Modem 115
Energy State 116
Digital Input for energy saving (ESS, Smart Grid) 117
2Way Valve 118
3Way Valve(A) 119
Final check 120

CONFIGURATION 121
DIP Switch Setting 121

SERVICE SETTING 128
How to enter service setting 128
Service setting 128
Service contact 129

INSTALLER SETTING 130
How to enter installer setting 130
Installer setting 131
Installer settings in detail 153
General – Alternating defrost 162
Auto mode - Seasonal auto temp. 163
Domestic hot water - DHW temperature settings 164
Domestic hot water - Thermal disinfection 165
Domestic hot water - DHW heating duration 166
Domestic hot water - DHW electric re-heating 166
Domestic hot water - DHW re-circulation 167
Solar thermal system - Solar collector operating range 168
Solar thermal system - Solar tank temp. limit 168
Solar thermal system - Solar thermal dT 168
Service - Pump test run 169
Service - Actuator test - Test mode 169
Service - Actuator test - Pump test 169
Service - Actuator test - Valve test 169
Service - Frost protection temperature 170
Connectivity - Modbus address(HEX) 171
Connectivity - CN_EXT 175
Connectivity - 3rd party boiler 176
Connectivity - Energy state 177

COMMISSIONING.....178
Check List before Starting Operation.....178
Starting Operation.....180
Starting Operation flow chart.....180
Trouble shooting.....181
ANNEX.....192

SAFETY INSTRUCTIONS

READ ALL INSTRUCTIONS BEFORE USE

The following safety guidelines are intended to prevent unforeseen risks or damage from unsafe or incorrect operation of the appliance.

Safety Messages

⚠ This symbol is displayed to indicate matters and operations that can cause risk.
Read the part with this symbol carefully and follow the instructions in order to avoid risk.

⚠ WARNING

This indicates that the failure to follow the instructions can cause serious injury or death.

⚠ CAUTION

This indicates that the failure to follow the instructions can cause the minor injury or damage to the product.

Notes for Flammable Refrigerant

The following symbols are displayed on units.



This symbol indicates that this appliance uses a flammable refrigerant. If the refrigerant is leaked and exposed to an external ignition source, there is a risk of fire.



This symbol indicates that the Installation Manual should be read carefully.



This symbol indicates that service personnel should be handling this equipment with reference to the Installation Manual.



This symbol indicates that information is available in the Owner's Manual or Installation Manual.

WARNING INSTRUCTIONS

⚠ WARNING

- To reduce the risk of explosion, fire, death, electric shock, injury or scalding to persons when using this product, follow basic precautions, including the following:

Installation

- Do not use a defective or underrated circuit breaker. Use this appliance on a dedicated circuit.
  – There is risk of fire or electric shock.
- For electrical work, contact the dealer, seller, a qualified electrician, or an Authorized Service Center.
  – There is risk of fire or electric shock.

- Always ground the unit.
  – There is risk of fire or electric shock.
- Install the panel and the cover of control box securely.
  – There is risk of fire or electric shock.
- Always install a dedicated circuit and breaker.
  – Improper wiring or installation may cause fire or electric shock.
- Use the correctly rated breaker or fuse.
  – There is risk of fire or electric.
- Do not modify or extend the power cable.
  – There is risk of fire or electric shock.
- Do not install, remove, change, inspection and maintenance, repair or reinstall the unit by yourself (customer).
  – There is risk of fire, electric shock, explosion, or injury.
- Do not change, remove the safety devices.
  – There is risk of death, injury.
- For antifreeze, always contact the dealer or an authorized service center.
  – Almost the antifreeze is a toxic product.
- For installation, always contact the dealer or an authorized Service Center.
  – There is risk of fire, electric shock, explosion, or injury.
- Do not install the unit on a defective installation stand.
  – It may cause injury, accident, or damage to the unit.
- Be sure the installation area does not deteriorate with age.
  – If the base collapses, the unit could fall with it, causing property damage, unit failure, and personal injury.
- Do not install the water pipe system as Open loop type.
  – It may cause failure of unit.
- Use a vacuum pump or inert (nitrogen) gas when doing leakage test or purging air. Do not compress air or oxygen and do not use flammable gases.
  – There is the risk of death, injury, fire or explosion.

- Make sure the connected condition of connector in product after maintenance.
  – Otherwise, it may cause product damage.
- Do not touch leaked refrigerant directly.
  – There is risk of frostbite.
- Copper in contact with refrigerants shall be oxygen-free or deoxidized, for example Cu-DHP as specified in EN 12735-1 and EN 12735-2.
- Compliance with national gas regulations shall be observed.
- Refrigerant tubing shall be protected or enclosed to avoid damage.
- The installation of pipe-work shall be kept to a minimum.
- A brazed, welded, or mechanical connection shall be made before opening the valves to permit refrigerant to flow between the refrigerating system parts.
- A vacuum valve shall be provided to evacuate the interconnecting pipe and/or any uncharged refrigerating system part.
- Any person who is involved with working on or breaking into a refrigerant circuit should hold a current valid certificate from an industry-accredited assessment authority, which authorises their competence to handle refrigerants safely in accordance with an industry recognised assessment specification. (Include the corresponding tools and required personal protective equipment)
- Any person who is involved with working on or breaking into a refrigerant circuit wear appropriate protective equipment and have a fire extingusher available.
- Do not use means to accelerate the defrosting process or to clean, other than those recommended by the manufacturer.
- Do not pierce or burn.
- Be aware that refrigerants might not contain an odour.

- Dismantling the unit, treatment of the refrigerant oil and eventual parts should be done in accordance with local and national standards.
- Flexible refrigerant connectors (such as connecting lines between the indoor and outdoor unit) that can be displaced during normal operation shall be protected against mechanical damage.
- Pipe-work shall be securely mounted and guarded from physical damage.
- Mechanical connections (mechanical connectors or flared joints) shall be accessible for maintenance purposes.
- Connect the water for filling or refilling the heating system as specified by EN 1717/EN 61770 to avoid contamination of drinking water by return flow.
- The appliance shall be installed in accordance with the national wiring regulation.
- Make sure installation necessary safety devices.
- Do not let refrigerant enter the sewage system.
- Always check for gas (refrigerant) leakage before installation or repair of unit by using the gas sniffer (Gas sniffer must be suitable for R290).
  – There is risk of explosion or fire and failure of unit.

Operation

- Take care to ensure that power cable could not be pulled out or damaged during operation.
  – There is risk of fire or electric shock.
- Do not place anything on the power cable.
  – There is risk of fire or electric shock.
- Do not plug or unplug the power supply plug during operation.
  – There is risk of fire or electric shock.

- Do not touch (operate) the unit with wet hands.
  – There is risk of fire or electric shock.
- Do not place a heater or other appliances near the power cable.
  – There is risk of fire or electric shock.
- Do not allow water to run into electric parts.
  – There is risk of fire, failure of the unit, or electric shock.
- Do not store or use flammable gas or combustibles near the unit.
  – There is risk of fire or failure of unit.
- Do not use the unit in a tightly closed space for a long time.
  – It may cause damage to the unit.
- When flammable gas leaks, turn off the gas and open a window for ventilation before turning the unit on.
  – There is risk of explosion or fire.
- If strange sounds, or smell or smoke comes from unit, turn the breaker off or disconnect the power supply cable.
  – There is risk of electric shock or fire.
- Stop operation and close the window in storm or hurricane. If possible, remove the unit from the window before the hurricane arrives.
  – There is risk of property damage, failure of unit, or electric shock.
- Take care so that children may not step on the outdoor unit.
  – Otherwise, children may be seriously injured due to falling down.
- Do not open the front cover of the unit while operation. (Do not touch the electrostatic filter, if the unit is so equipped.)
  – There is risk of physical injury, electric shock, or unit failure.
- Do not touch any electric part with wet hands. you should be power off before touching electric part.
  – There is risk of electric shock or fire.
- Do not touch refrigerant pipe and water pipe or any internal parts while the unit is operating or immediately after operation.
  – There is risk of burns or frostbite, personal injury.

- If you touch the pipe or internal parts, you should be wear protection or wait time to return to normal temperature.
  – Otherwise , it may cause burns or frostbite, personal injury.
- Turn the main power on 6 hours ago before the product starting operation.
  – Otherwise, it may cause compressor damage.
- Do not touch electric parts for 10 minutes after main power off.
  – There is risk of physical injury, electric shock.
- The inside heater of product may operate during stop mode. It is intended to protect the product.
- Be careful that some part of the control box are hot.
  – There is risk of physical injury or burns.
- When the unit is soaked (flooded or submerged), contact an Authorized Service Center.
  – There is risk of fire or electric shock.
- Be cautious that water could not be poured to the unit directly.
  – There is risk of fire, electric shock, or unit damage.
- Ventilate the unit from time to time when operating it together with a stove, etc.
  – There is risk of fire or electric shock.
- Turn the main power off when cleaning or maintaining the unit.
  – There is risk of electric shock.
- Take care to ensure that nobody could step on or fall onto the unit.
  – This could result in personal injury and unit damage.
- Do not install the product where the noise or hot air from the outdoor unit could damage or disturb the neighborhoods. It may cause a problem for your neighbors and hence dispute.
- If the unit is not used for long time, we strongly recommend not to switch off the power supply to the unit.
  – There is risk of water freezing.

- If the unit is not used and switch off the power supply to the unit for long time, we strongly recommend to drain off all water in the unit by certificated person.
  – There is risk of water freezing.
- The appliance shall be stored in an area where the room size corresponds to the room area as specified for operation.
- The appliance shall be stored in a room without continuously operating ignition sources (for example: open flames, an operating gas appliance or an operating electric heater).
- The appliance shall be stored so as to prevent mechanical damage from occurring.
- The appliance shall be stored in a room without continuously operating open flames (for example an operating gas appliance) or other potential ignition sources (for example an operating electric heater, hot surfaces).
- Servicing shall only be performed as recommended by the equipment manufacturer. Maintenance and repair requiring the assistance of other skilled personnel shall be carried out under the supervision of the person competent in the use of flammable refrigerants.
- Servicing shall be performed only as recommended by the manufacturer.
- Mechanical connectors used indoors shall comply with ISO 14903. When mechanical connectors are reused indoors, sealing parts shall be renewed. When flared joints are reused indoors, the flare part shall be re-fabricated.
- Periodic(more than once/year) cleaning of the dust or salt particles stuck on the heat exchangers by using water.
- Keep any required ventilation openings clear of obstruction.
- Electrical components shall only be replaced with parts specified by the appliance manufacturer.
- Replacement with other parts may result in the ignition of refrigerant in the event of a leak.

CAUTION INSTRUCTIONS

⚠ CAUTION

- To reduce the risk of minor injury to persons, malfunction, or damage to the product or property when using this product, follow basic precautions, including the following:

Installation

- Keep level even when installing the unit.
  – To avoid vibration or water leakage.
- Two or more people to lift and transport the unit. Avoid personal injury.
- If anyone other than a licensed Professional installs, repairs, or alters LG Electronics Air Conditioning Products, the warranty is voided.
  – All costs associated with repair are then the full responsibility of the owner.
- Do not insert a drain hose in drain or soil pipe.
  – Bad smells can occur and it results in a corrosion of a heat exchanger or pipe.
- Do not install the unit in potentially explosive atmospheres.
- Refrigerants are pre-charged in the factory to the outdoor unit. Additional refrigerants need to be charged depending on the length and size of pipe.
- Make the connections securely so that the outside force of the cable may not be applied to the terminals.
  – Inadequate connection and fastening may generate heat and cause a fire.

Operation

- Do not use the product for special purposes, such as preserving foods, works of art, etc. It is a consumer AWHP, not a precision refrigeration system. There is risk of damage or loss of property.

- Use a soft cloth to clean. Do not use harsh detergents, solvents, etc.
  – There is risk of fire, electric shock, or damage to the plastic parts of the unit.
- Do not step on or put anything on the unit.
  – There is risk of personal injury and failure of unit.
- Use a firm stool or ladder when cleaning or maintaining the unit.
  – Be careful and avoid personal injury.
- Do not turn on the breaker or power under condition that front panel cabinet, top cover, control box cover are removed or opened.
  – Otherwise it may cause fire, electric shock, explosion or death.
- The appliance shall be disconnected from its power source during service and when replacing parts.
- Means for disconnection must be incorporated in the fixed wiring in accordance with the wiring rules.
- The Installation kit supplied with the appliance are to be used and that old Installation kit should not be reused.
- If the supply cord is damaged, it must be replaced by the manufacturer, its service agent or similarly qualified persons in order to avoid a hazard. Installation work must be performed in accordance with the national wiring standards by authorized personnel only.
- The instructions for service to be done by specialized personnel, mandated by the manufacturer or the authorized representative may be supplied in only one Community language which the specialized personnel understand.
- This appliance is not intended for use by persons (including children) with reduced physical, sensory or mental capabilities or lack of experience and knowledge, unless they have been given supervision or instruction concerning use of the appliance by a person responsible for their safety.
  Children should be supervised to ensure that they do not play with the appliance.

- This appliance can be used by children aged from 8 years and above and persons with reduced physical, sensory or mental capabilities or lack of experience and knowledge if they have been given supervision or instruction concerning use of the appliance in a safe way and understand the hazards involved. Children shall not play with the appliance.
  Cleaning and user maintenance shall not be made by children without supervision.
- Replace the all batteries in the remote control with new ones of the same type. Do not mix old and new batteries or different types of batteries. There is risk of fire or product failure.
- The manufacturer should specify other potential continuously operating sources known to cause ignition of the refrigerant used.
- In order to avoid a hazard due to inadvertent resetting of the thermal cut-out, this appliance must not be supplied through an external switching device, such as a timer, or connected to a circuit that is regularly switched on and off by the utility.

Safety Instructions for the Service

Checks to the area

- Prior to beginning work on systems containing flammable refrigerants, safety checks are necessary to ensure that the risk of ignition is minimised. For repair to the refrigerating system, the following precautions shall be complied prior to conducting work on the system.

Work procedure

- Work shall be undertaken under a controlled procedure so as to minimise the risk of a flammable gas or vapour being present while the work is being performed.

General work area

- All maintenance staff and others working in the local area shall be instructed on the nature of work being carried out. Work in confined spaces shall be avoided.

Checking for presence of refrigerant

- The area shall be checked with an appropriate refrigerant detector prior to and during work, to ensure the technician is aware of potentially toxic or flammable atmospheres.
- Ensure that the leak detection equipment being used is suitable for use with all applicable refrigerants, i.e. nonsparking, adequately sealed or intrinsically safe.

Presence of fire extinguisher

- If any hot work is to be conducted on the refrigerating equipment or any associated parts, appropriate fire extinguishing equipment shall be available to hand.
  Have a dry powder or CO_2 fire extinguisher adjacent to the charging area.

No ignition sources

- No person carrying out work in relation to a refrigerating system which involves exposing any pipe work shall use any sources of ignition in such a manner that it can lead to the risk of fire or explosion.
- All possible ignition sources, including cigarette smoking, should be kept sufficiently far away from the site of installation, repairing, removing and disposal, during which refrigerant can possibly be released to the surrounding space.
  Prior to work taking place, the area around the equipment is to be surveyed to make sure that there are no flammable hazards or ignition risks. "No Smoking" signs shall be displayed.

Ventilated area

- Ensure that the area is in the open or that it is adequately ventilated before breaking into the system or conducting any hot work. A degree of ventilation shall continue during the period that the work is carried out. The ventilation should safely disperse any released refrigerant and preferably expel it externally into the atmosphere.

Checks to the refrigerating equipment

- Where electrical components are being changed, they shall be fit for the purpose and to the correct specification. At all times the manufacturer's maintenance and service guidelines shall be followed.
- If in doubt consult the manufacturer's technical department for assistance.
- The following checks shall be applied to installations using flammable refrigerants:
  - The refrigerant charge is in accordance with the room size within which the refrigerant containing parts are installed;
  - The ventilation machinery and outlets are operating adequately and are not obstructed;
  - If an indirect refrigerating circuit is being used, the secondary circuit shall be checked for the presence of refrigerant;
  - Marking to the equipment continues to be visible and legible. Markings and signs that are illegible shall be corrected;
  - Refrigerating pipe or components are installed in a position where they are unlikely to be exposed to any substance which can corrode refrigerant containing components, unless the components are constructed of materials which are inherently resistant to being corroded or are suitably protected against being so corroded.

Checks to electrical devices

- Repair and maintenance to electrical components shall include initial safety checks and component inspection procedures.
- If a fault exists that could compromise safety, then no electrical supply shall be connected to the circuit until it is satisfactorily dealt with.
- If the fault cannot be corrected immediately but it is necessary to continue operation, an adequate temporary solution shall be used.
- This shall be reported to the owner of the equipment so all parties are advised.
- Initial safety checks shall include:
  - That capacitors are discharged: this shall be done in a safe manner to avoid possibility of sparking;
  - That no live electrical components and wiring are exposed while charging, recovering or purging the system;
  - That there is continuity of earth bonding.

Sealed electrical components

- Sealed electrical components shall not be repaired.

Cabling

- Check that cabling will not be subject to wear, corrosion, excessive pressure, vibration, sharp edges or any other adverse environmental effects.
- The check shall also take into account the effects of aging or continual vibration from sources such as compressors or fans.

Detection of flammable refrigerants

- Under no circumstances shall potential sources of ignition be used in the searching for or detection of refrigerant leaks.

- A halide torch (or any other detector using a naked flame) shall not be used.
- The following leak detection methods are deemed acceptable for all refrigerant systems.
  – Electronic leak detectors may be used to detect refrigerant leaks but, in the case of flammable refrigerants, the sensitivity can be inadequate, or can need re-calibration. (Detection equipment shall be calibrated in a refrigerant-free area.)
  – Ensure that the detector is not a potential source of ignition and is suitable for the refrigerant used.
  – Leak detection equipment shall be set at a percentage of the LFL of the refrigerant and shall be calibrated to the refrigerant employed and the appropriate percentage of gas (25 % maximum) is confirmed.
  – Leak detection fluids are also suitable for use with most refrigerants but the use of detergents containing chlorine shall be avoided as the chlorine can react with the refrigerant and corrode the copper pipe-work.

NOTE

Examples of leak detection fluids are

- Bubble method
- Fluorescent method agents

  – If a leak is suspected, all naked flames shall be removed/extinguished.
  – If a leakage of refrigerant is found which requires brazing, all of the refrigerant shall be recovered from the system, or isolated (by means of shut off valves) in a part of the system remote from the leak.
  – Removal of refrigerant shall be according to Refrigerant removal and circuit evacuation proecdure.

Refrigerant removal and circuit evacuation

- When breaking into the refrigerant circuit to make repairs – or for any other purpose – conventional procedures shall be used. However, for flammable refrigerants it is important that best practice is followed since flammability is a consideration. The following procedure shall be adhered to:
  - Safely remove refrigerant following local and national regulations;
  - Evacuate;
  - Purge the circuit with inert gas (optional for A2L);
  - Evacuate (optional for A2L);
  - Continuously flush with inert gas when using flame to open circuit;
  - Open the circuit.
- The refrigerant charge shall be recovered into the correct recovery cylinders.
- The manufacturer shall specify the inert gases that can be used.
- Compressed air or oxygen shall not be used for purging refrigerant systems.

NOTE

An example of an inert gas is dry nitrogen.

- Purging of the refrigerant circuit shall be achieved by breaking the vacuum in the system with inert gas and continuing to fill until the working pressure is achieved, then venting to atmosphere, and finally pulling down to a vacuum.
- This process shall be repeated until no refrigerant is within the system.
- The system shall be vented down to atmospheric pressure to enable work to take place.

- Ensure that the outlet of the vacuum pump is not close to any potential ignition sources and that ventilation is available.

Charging procedures

- In addition to conventional charging procedures, the following requirements shall be followed.
  - Ensure that contamination of different refrigerants does not occur when using charging equipment. Hoses or lines shall be as short as possible to minimise the amount of refrigerant contained in them.
  - Cylinders shall be kept in an appropriate position according to the instructions.
  - Ensure that the refrigerating system is earthed prior to charging the system with refrigerant.
  - Label the system when charging is complete (if not already labelled).
  - Extreme care shall be taken not to overfill the refrigerating system.
- Prior to recharging the system, it shall be pressure-tested with the appropriate purging gas.
- The system shall be leak-tested on completion of charging but prior to commissioning.
- A follow up leak test shall be carried out prior to leaving the site.

Decommissioning

- Before carrying out this procedure, it is essential that the technician is completely familiar with the equipment and all its detail.
- It is recommended good practice that all refrigerants are recovered safely.
- Prior to the task being carried out, an oil and refrigerant sample shall be taken in case analysis is required prior to re-use of recovered refrigerant.

- It is essential that electrical power is available before the task is commenced.
  1) Become familiar with the equipment and its operation.
  2) Isolate system electrically.
  3) Before attempting the procedure, ensure that:
     a) mechanical handling equipment is available, if required, for handling refrigerant cylinders;
     b) all personal protective equipment is available and being used correctly;
     c) the recovery process is supervised at all times by a competent person;
     d) recovery equipment and cylinders conform to the appropriate standards.
  4) Pump down refrigerant system, if possible.
  5) If a vacuum is not possible, make a manifold so that refrigerant can be removed from various parts of the system.
  6) Make sure that the cylinder is situated on the scales before recovery takes place.
  7) Start the recovery machine and operate in accordance with instructions.
  8) Do not overfill cylinders (no more than 80 % volume liquid charge).
  9) Do not exceed the maximum working pressure of the cylinder, even temporarily.
  10) When the cylinders have been filled correctly and the process completed, make sure that the cylinders and the equipment are removed from site promptly and all isolation valves on the equipment are closed off.
  11) Recovered refrigerant shall not be charged into another refrigerating system unless it has been cleaned and checked.

Labelling

- Equipment shall be labelled stating that it has been de-commissioned and emptied of refrigerant.
- The label shall be dated and signed.
- For appliances containing flammable refrigerants, ensure that there are labels on the equipment stating the equipment contains flammable refrigerant.

Recovery

- When removing refrigerant from a system, either for servicing or decommissioning, it is required to follow good practice so that all refrigerants are removed safely.
- When transferring refrigerant into cylinders, ensure that only appropriate refrigerant recovery cylinders are employed.
- Ensure that the correct number of cylinders for holding the total system charge is available.
- All cylinders to be used are designated for the recovered refrigerant and labelled for that refrigerant (i.e. special cylinders for the recovery of refrigerant).
- Cylinders shall be complete with pressure-relief valve and associated shut-off valves in good working order. Empty recovery cylinders are evacuated and, if possible, cooled before recovery occurs.
- The recovery equipment shall be in good working order with a set of instructions concerning the equipment that is at hand and shall be suitable for the recovery of the flammable refrigerant.
- Consult manufacturer if in doubt. In addition, a set of calibrated weighing scales shall be available and in good working order.
- Hoses shall be complete with leak-free disconnect couplings and in good condition.

- The recovered refrigerant shall be processed according to local legislation in the correct recovery cylinder, and the relevant waste transfer note arranged.
- Do not mix refrigerants in recovery units and especially not in cylinders. If compressors or compressor oils are to be removed, ensure that they have been evacuated to an acceptable level to make certain that flammable refrigerant does not remain within the lubricant.
- The compressor body shall not be heated by an open flame or other ignition sources to accelerate this process.
- Draining of oil from a system shall be carried out safely.

Qualification of workers

- The manual shall contain specific information about the required qualification of the working personnel for maintenance, service and repair operations.
  Every working procedure that affects safety means shall only be carried out by competent persons.

  Examples for such working procedures are :

  – Breaking into the refrigerating circuit;
  – Opening of sealed components;
  – Opening of ventilated enclosures.

DELIVERED PARTS

Before starting installation, please make it sure that all parts are found inside the product box.

Indoor Unit Box

Item	Image	Quantity
Indoor unit	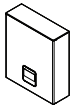	1
Installation Sheet	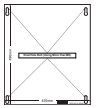	1
Cascade Inlet Temperature Sensor		1
Cascade Outlet Temperature Sensor		1
Installation Manual (1Sheet)		1
Owner's / Installation manual (Simple)		1
Sensor Holder		2
Sensor Connector		2

Outdoor Unit Box

Item	Image	Quantity
Outdoor Unit	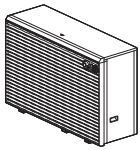	1
Drain Cap		6* 7**
Drain Nipple	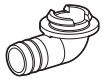	1
Strainer		1
Damper		4 **** 6 ***
Sling Belt		2 *

※ It can be different by model.

*: UB*0
**: U*41
***: UB60
****: U*4*

Downward piping kit (Optional)

Item	Image	Quantity
Rubber pipe		1
Rubber pipe		1
Clamp		4

INSTALLATION TOOLS

Figure	Name	Figure	Name
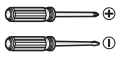	Screw driver		Ohmmeter
	Electric drill	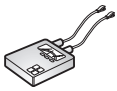	Ammeter
	Measuring tape, Knife		Leak detector (Suitable for R290)
	Hole core drill	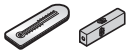	Thermometer, Horizontal meter
	Spanner		Pliers
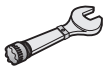	Torque wrench		Fire extinguisher

GENERAL INFORMATION

Model information

Additional information about all possible combinations including Energy labels and ErP datasheets can be found on following website:
https://www.lg.com/global/support/cedoc/cedoc

NOTE

Search for outdoor unit's model name on that website.

Operating condition

- Maximum operating temperature of water : 70 °C
- Minimum operating temperature of water : 15 °C
- Maximum inlet water pressure : 0.3 MPa
- Minimum inlet water pressure : 0.03 MPa

Buyer Model Name

Outdoor unit

Refrigerant	No.							
	1	2	3	4	5	6	7	8
R290	H	M	16	1	H	F	-	UB60

No.	Signification
1	Air-to-Water-Heat Pump
2	Classification - M: Monobloc
3	Heating Capacity - E.g) 16 kW '16'
4	Electrical ratings - 1: 1Ø 220-240 V~ 50 Hz - 3: 3Ø 380-415 V~ 50 Hz
5	Leaving Water Combination - H: High Temperature
6	Refrigerant - F: R290
7	Function -X: Models for specific customers - D#: Hydrosplit
8	Chassis Name - UA4: UN36A Chassis - UB4: UN36B Chassis - UB6: UN60B Chassis

Indoor unit

Refrigerant	No.										
	1	2	3	4	5	6	7	8	9	10	11
R290	P	H	C	M	0	-	-	-	-	-	-

No.	Signification
1	P: Part or Accessory
2,3	HL: Heating AWHP Accessory kit HC: Heating AWHP Control KIT
4	T: Sanitary Tank L: Solar Thermal S: Single unit M: Cascade control unit
5	In order of performance, core parts, and development in case of change (August 2010, starting from 0)

Parts and Dimensions

Indoor Unit

(Unit : mm)

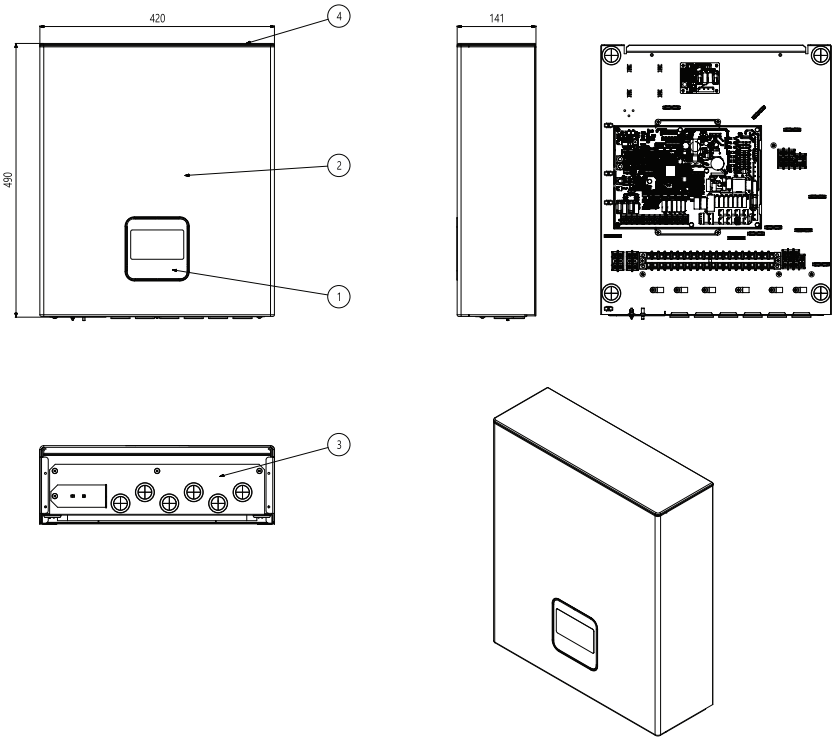

* The feature may be vary according to the type of model.

Description

No.	Name	Remark
1	Remote Controller Assembly	Built-in Remote Controller
2	Panel Assembly,Front	SGMCD1 M08 ESSENCE WHITE PCM
3	Base Assembly,Indoor	PCB and terminal blocks
4	Cover	MOLD ABS

Outdoor unit : External

[UB40 Series]

(Unit : mm)

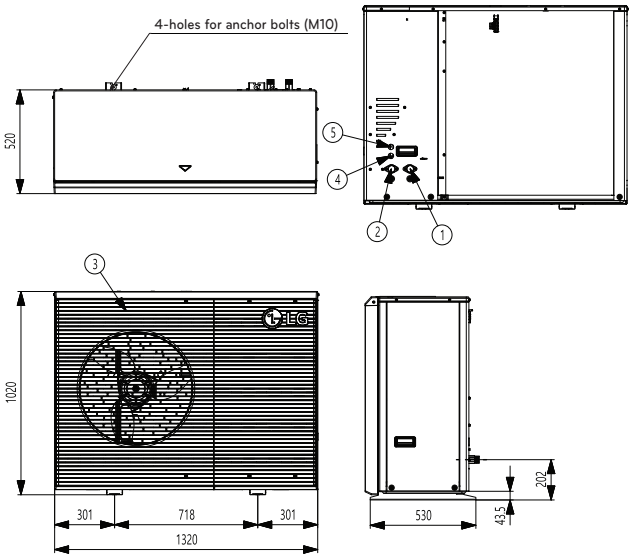

Description

No	Name
1	Entering Water Pipe (Male PT 1 inch)
2	Leaving Water Pipe (Male PT 1 inch)
3	Air discharge Grille
4	Cable Conduit (Power)
5	Cable conduit (Communication)

Outdoor unit : Internal

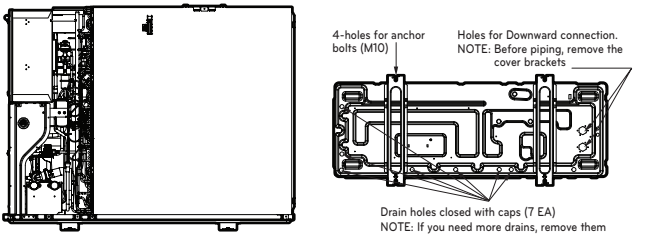

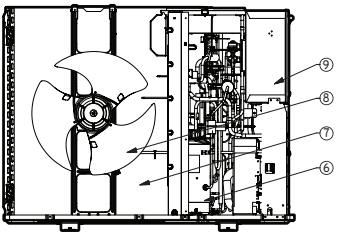

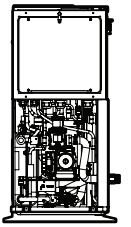

Description

No	Name	Remark
6	Compressor	Increase pressure of the refrigerant.
7	Fin tube Heat Exchanger	Heat exchange between refrigerant and air.
8	Fan	Circulating the air.
9	Control Box	PCB and terminal blocks.

Outdoor unit : External

[UB60 Series]

(Unit : mm)

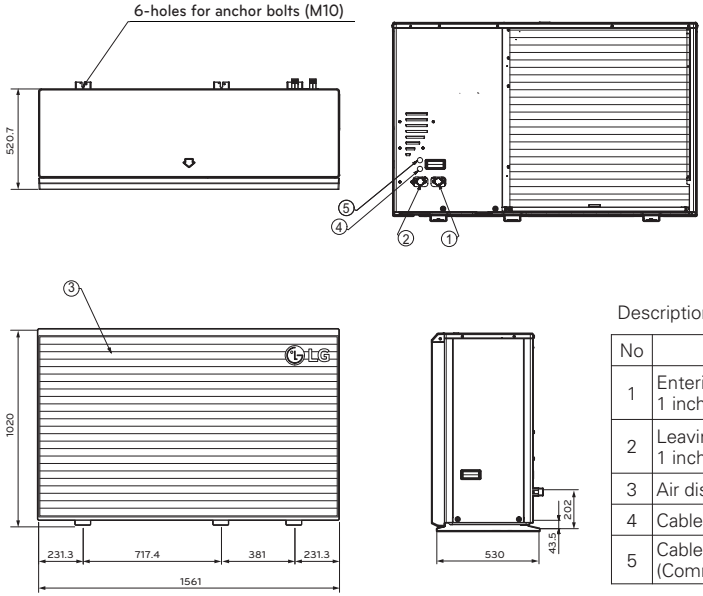

Description

No	Name
1	Entering Water Pipe (Male PT 1 inch)
2	Leaving Water Pipe (Male PT 1 inch)
3	Air discharge Grille
4	Cable Conduit (Power)
5	Cable conduit (Communication)

Outdoor unit : Internal

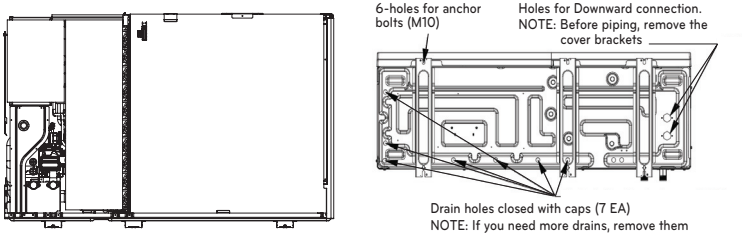

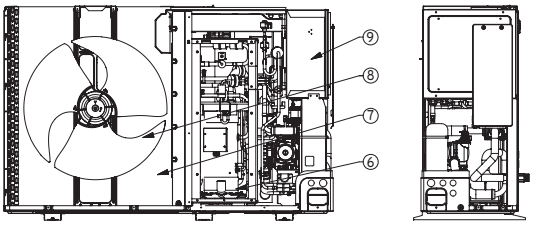

Description

No	Name	Remark
6	Compressor	Increase pressure of the refrigerant.
7	Fin tube Heat Exchanger	Heat exchange between refrigerant and air.
8	Fan	Circulating the air.
9	Control Box	PCB and terminal blocks.

Outdoor unit : External

[UA41 Series]

(Unit : mm)

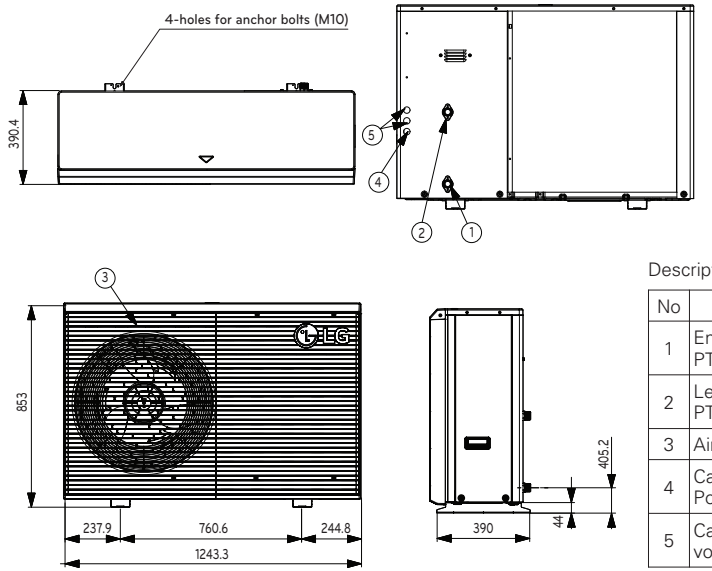

Description

No	Name
1	Entering Water Pipe (Male PT 1 inch)
2	Leaving Water Pipe (Male PT 1 inch)
3	Air discharge Grille
4	Cable Conduit (Unit Power)
5	Cable Conduit (Low voltage)

Outdoor unit : Internal

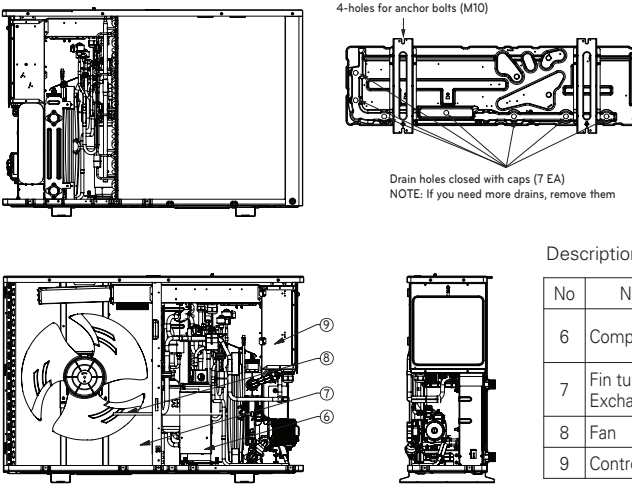

Description

No	Name	Remark
6	Compressor	Increase pressure of the refrigerant.
7	Fin tube Heat Exchanger	Heat exchange between refrigerant and air.
8	Fan	Circulating the air.
9	Control Box	PCB and terminal blocks.

Outdoor unit : External

[UB41 Series]

(Unit : mm)

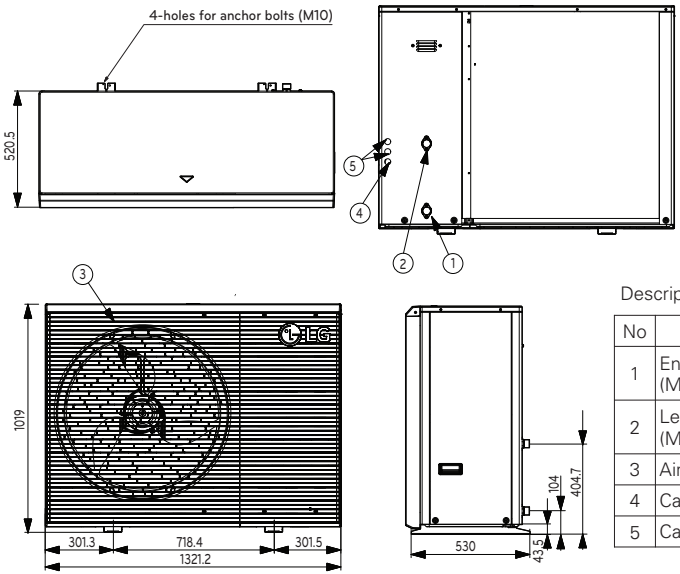

Description

No	Name
1	Entering Water Pipe (Male PT 1 inch)
2	Leaving Water Pipe (Male PT 1 inch)
3	Air discharge Grille
4	Cable Conduit (Unit Power)
5	Cable Conduit (Low voltage)

Outdoor unit : Internal

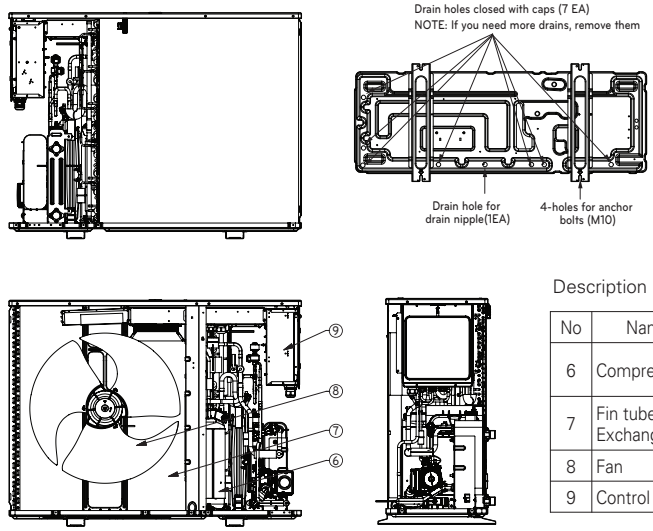

Description

No	Name	Remark
6	Compressor	Increase pressure of the refrigerant.
7	Fin tube Heat Exchanger	Heat exchange between refrigerant and air.
8	Fan	Circulating the air.
9	Control Box	PCB and terminal blocks.

Control Parts

Control Unit

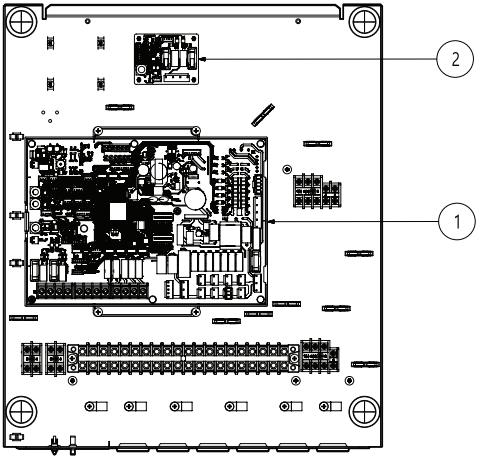

Description

No	Name	Remark
1	Main PCB	The main PCB(Printed Circuit Board) controls the functioning of the unit and the connected accessories
2	Sub PCB	The sub PCB(Printed Circuit Board) assist communication between the main PCB and the central control

Control Panel

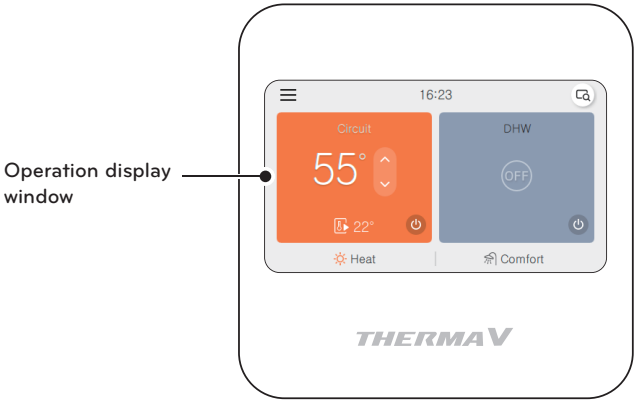

Operation display window	Operation and Settings status display

Typical Installation Example

⚠ CAUTION

For detailed electric wiring and water piping, please contact authorized installer.
It is recommended to install a buffer tank - unless minimum flow rate can be guaranteed elsewise. Especially in older houses, it is recommended to use a magnetic filter.

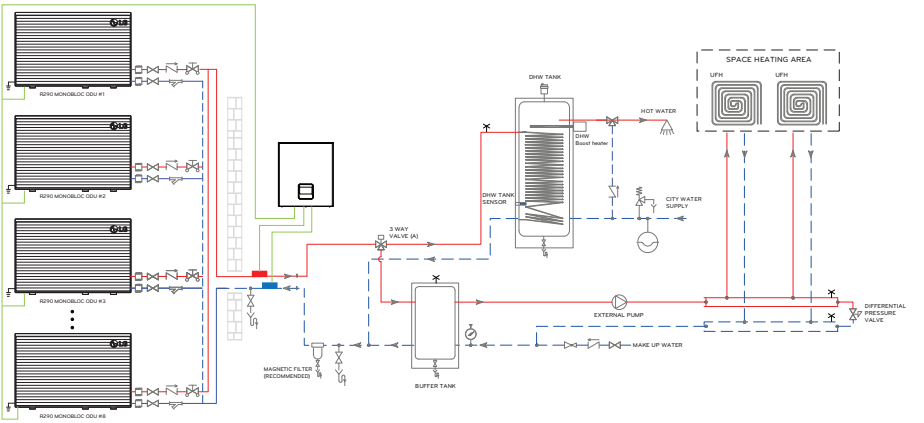

※ It can be different by model.

NOTE

- The exemplary diagram does not include all necessary safety and installation devices. This is not an 'as-built drawing'
- A minimum of 2 units and a maximum of 8 units can be installed with one cascade control unit.
- Cascade control unit can only be combined with the same outdoor unit.
  ex) HM161HF + HM161HF (O), HM161HF + HM141HF (X)

Description

	Circulation Pump		Motorized 3 Way Valve		Check Valve		Deluxe Remote Controller
	Expansion Tank		Motorized 2 Way Valve		Safety Relief Expansion Tank Valve with drain		Balancing Valve
	Air Vent		Differential Pressure Valve		Y-type strainer		Dry Contact
	Pressure Gauge		Thermostatic Mixing Valve		Flow Sensor		Wi-Fi Modem
	Flexible Connection		Shut Off Valve		Magnetic Contactor		Thermostat
	Drain		Pressure Reducing Valve		Cascade Inlet Temperature Sensor		Cascade Outlet Temperature Sensor

※ For more installation scenes, visit http://partner.lge.com/ or contact your local LG office.
Select Region ⟶ Doc. Library ⟶ (Product) Heating ⟶ Application Guide ⟶ Referenced Drawing for Application

Cycle Diagram

[UB40 Series]

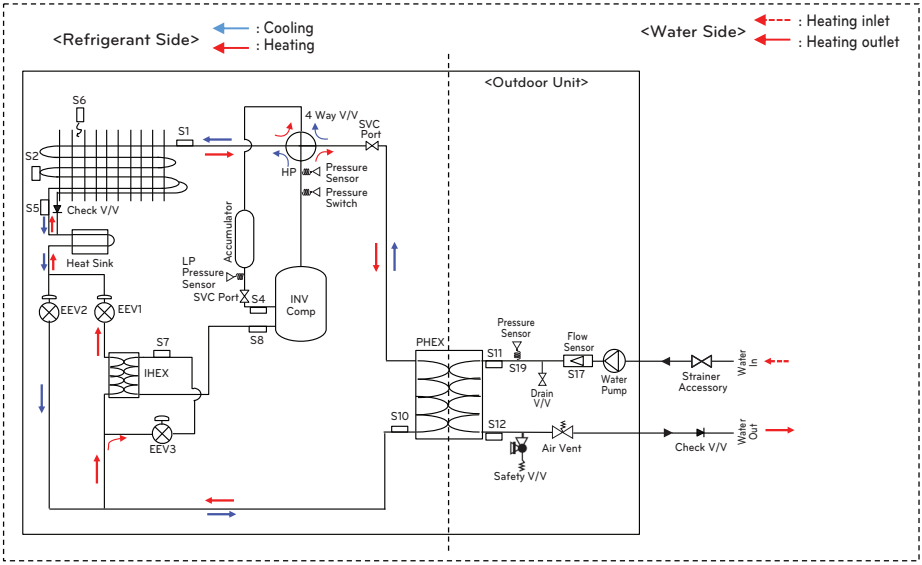

Description

Category	Symbol	Meaning
Refrigerant side	S1	Outdoor-HEX gas temp. sensor
	S2	Outdoor-HEX middle temp. sensor
	S3	Compressor discharge temp. sensor
	S4	Compressor suction pipe temp. sensor
	S5	Outdoor-HEX temp. sensor
	S6	Outdoor air temp. sensor
	S7	Compressor-injection pipe IN temp. sensor
	S8	Compressor-injection pipe OUT temp. sensor
	S10	PHEX liquid temp. sensor
	LP	Low pressure sensor
	HP	High pressure sensor
Water Side	S11	Inlet water temp. sensor
	S12	Outlet water temp. sensor
	S17	Flow sensor
	S19	Water pressure sensor

[UB60 Series]

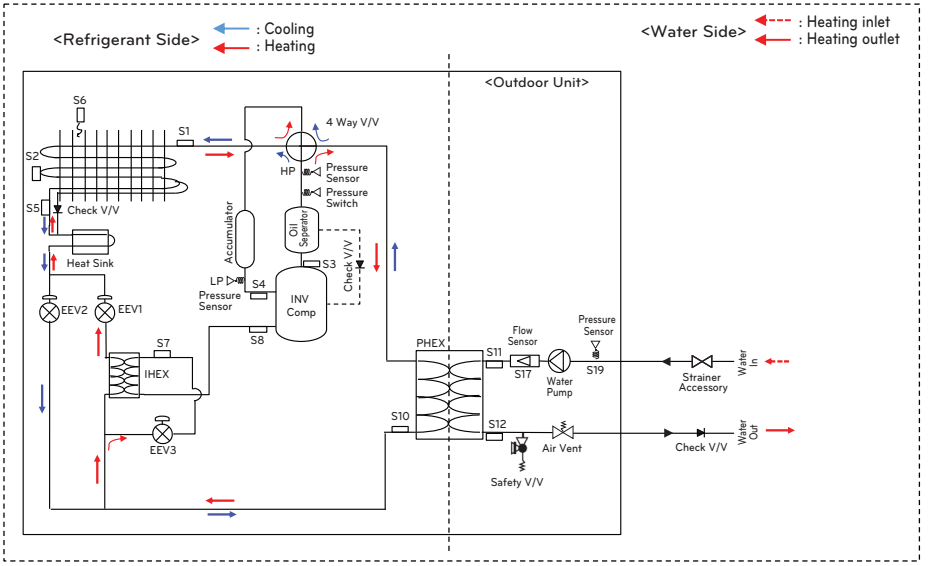

Description

Category	Symbol	Meaning
Refrigerant side	S1	Outdoor-HEX gas temp. sensor
	S2	Outdoor-HEX middle temp. sensor
	S3	Compressor discharge temp. sensor
	S4	Compressor suction pipe temp. sensor
	S5	Outdoor-HEX temp. sensor
	S6	Outdoor air temp. sensor
	S7	Compressor-injection pipe IN temp. sensor
	S8	Compressor-injection pipe OUT temp. sensor
	S10	PHEX liquid temp. sensor
	LP	Low pressure sensor
	HP	High pressure sensor
Water Side	S11	Inlet water temp. sensor
	S12	Outlet water temp. sensor
	S17	Flow sensor
	S19	Water pressure sensor

[UA41, UB41 Series]

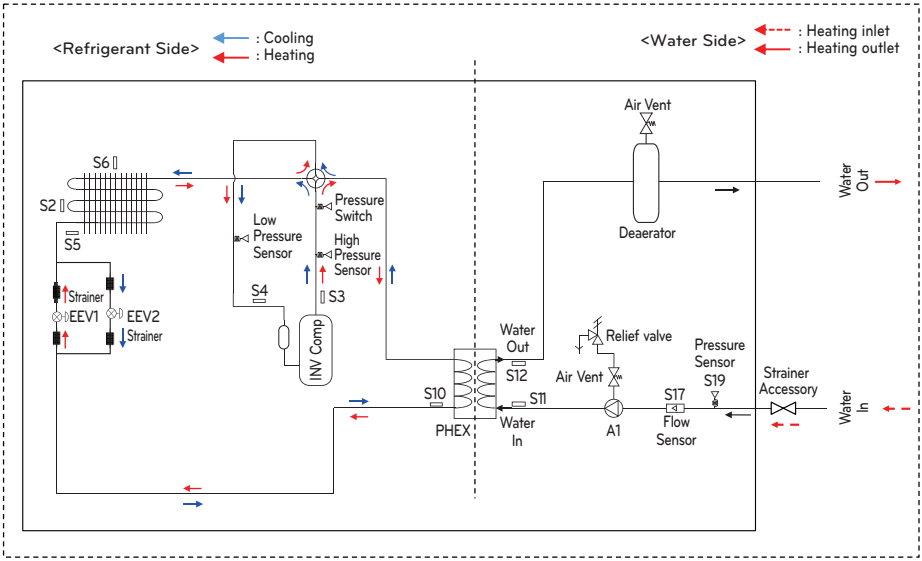

Description

Category	Symbol	Meaning
Refrigerant side	S10	PHEX liquid temp. sensor
	S3	Compressor-dlischarge pipe temperature sensor
	S4	Compressor-suction pipe temperature sensor
	S2	Outdoor-HEX middle temp. sensor
	S5	Outdoor-HEX temp. sensor
	S6	Outdoor air temperature sensor
	EEV1	Electronic Expansion Valve (Heating)
	EEV2	Electronic Expansion Valve (Cooling)
Water Side	S11	Inlet water temperature sensor
	S12	Outlet water temperature sensor
	S13	Electric backup heater outlet (Accessory kit)
	S17	Flow sensor
	S19	Water pressure sensor
	A1	Main Water Pump

Wiring Diagram

Indoor Unit: PHCM0

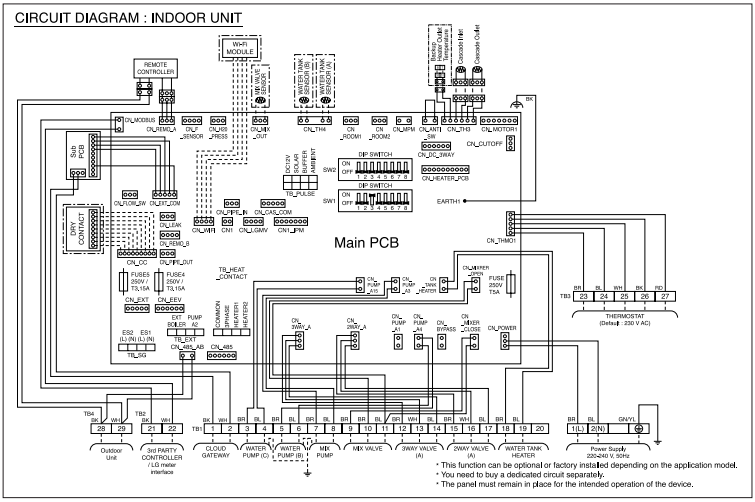

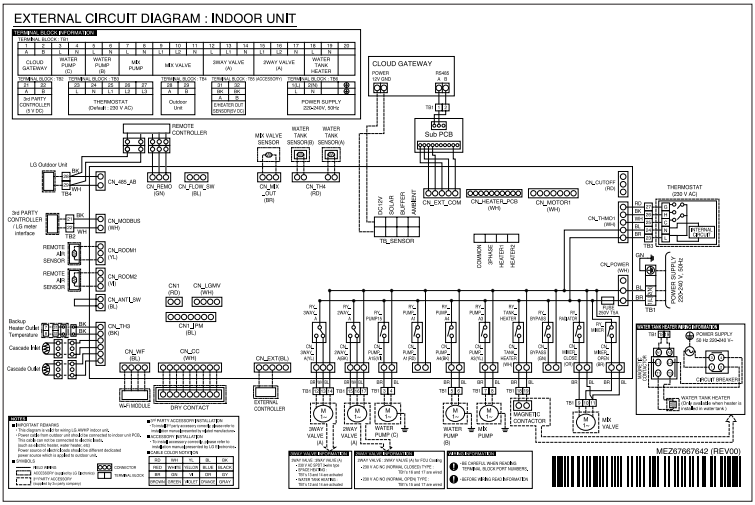

■ For Cascade Control Unit

Outdoor Unit: UA41 Series, 1Ø

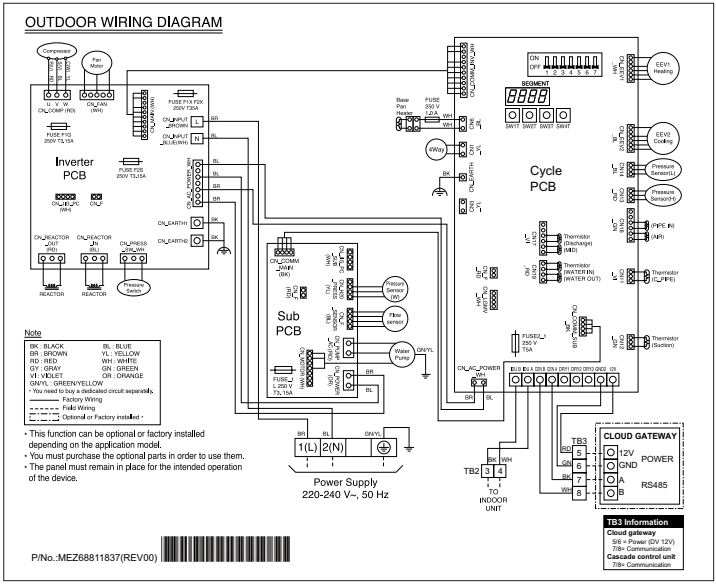

Outdoor Unit: UB41 Series, 1Ø

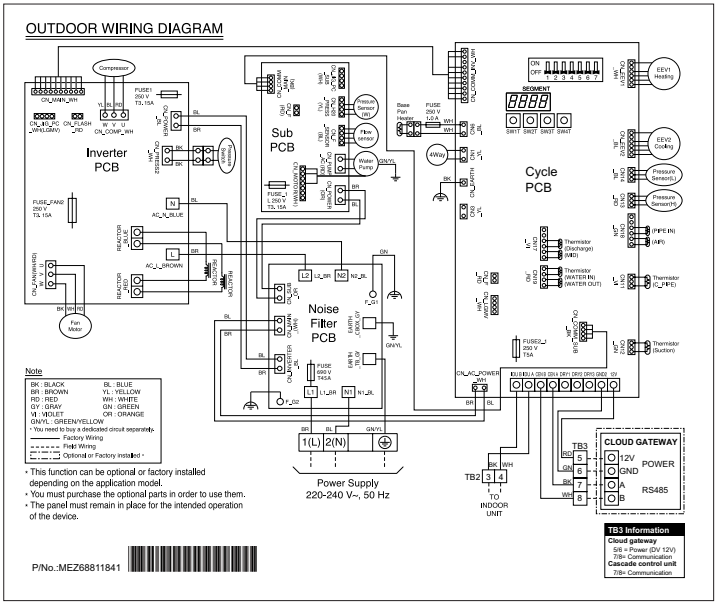

■ For Cascade Control Unit

Outdoor Unit: UA41, UB41 Series, 3Ø

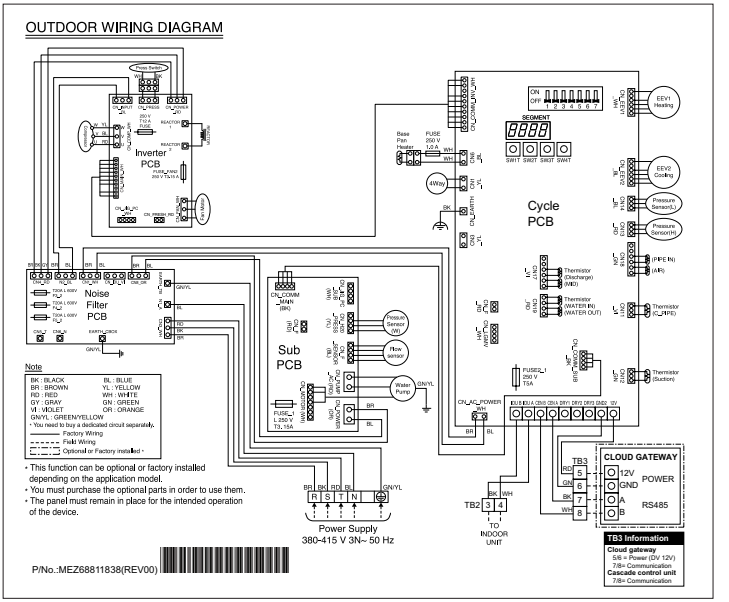

■ For Cascade Control Unit

Outdoor Unit: UB40 Series, 1Ø

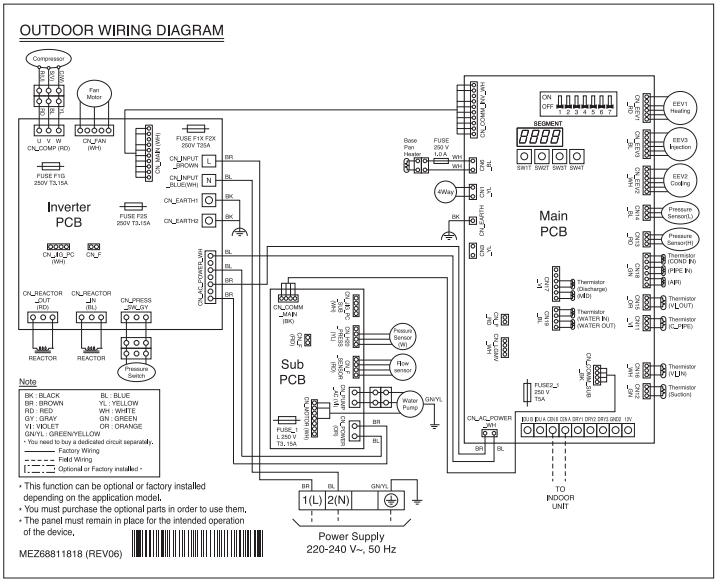

Outdoor Unit: UB40 Series, 3Ø

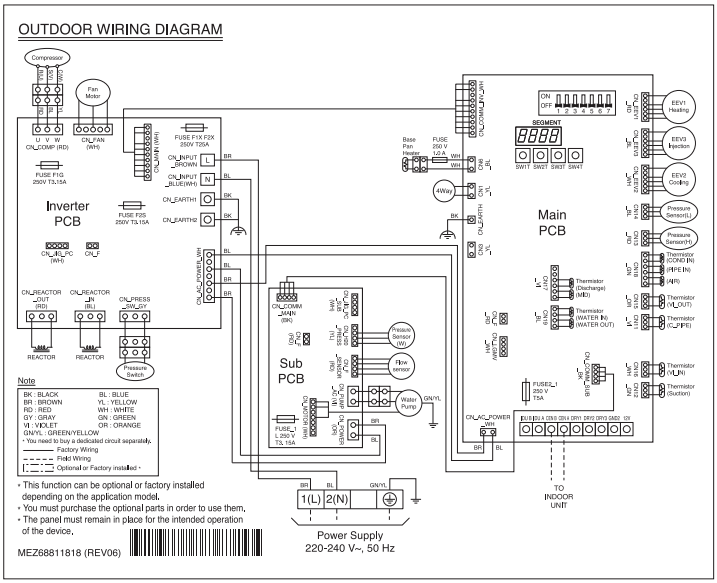

■ For Cascade Control Unit

Outdoor Unit: UB60 Series, 1Ø

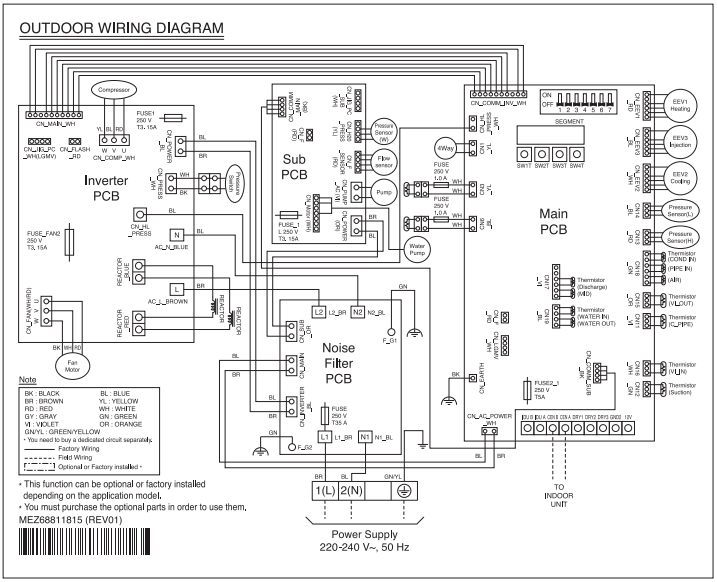

Outdoor Unit: UB60 Series, 3Ø

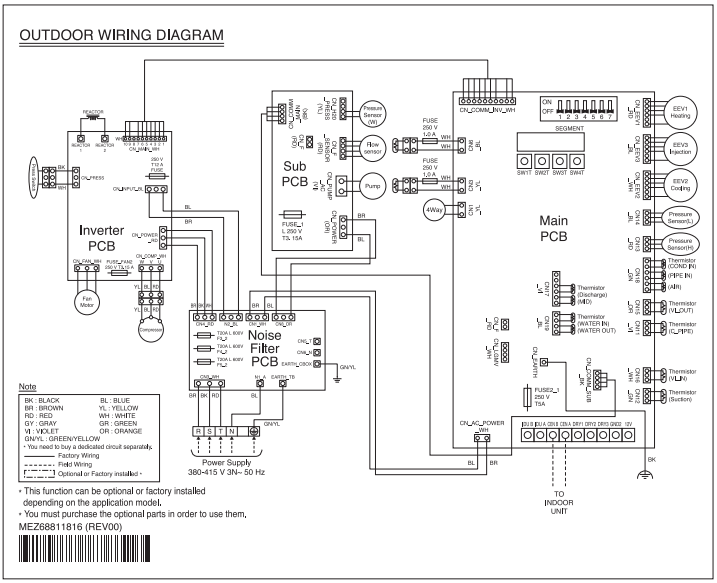

INSTALLATION OF OUTDOOR UNIT

The outdoor unit is installed outside to exchange heat with ambient air.
Therefore, it is important to secure proper space around the outdoor unit and care for specific external conditions. This chapter presents a guide to install the outdoor unit, make a route to connect with the indoor, and what to do when installed around seaside.

Conditions to be considered when installing the outdoor unit

For noise reduction

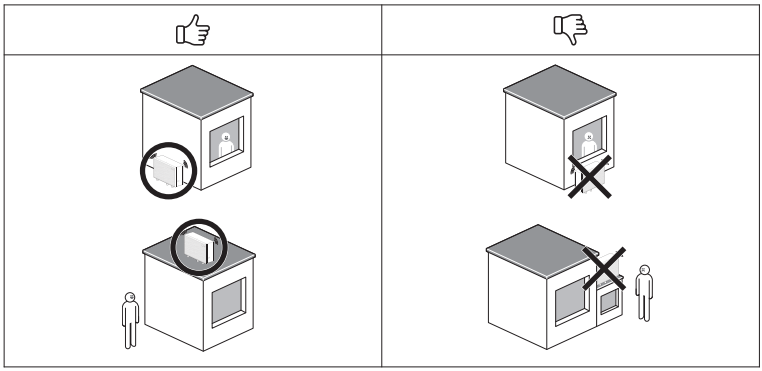

For good ventilation

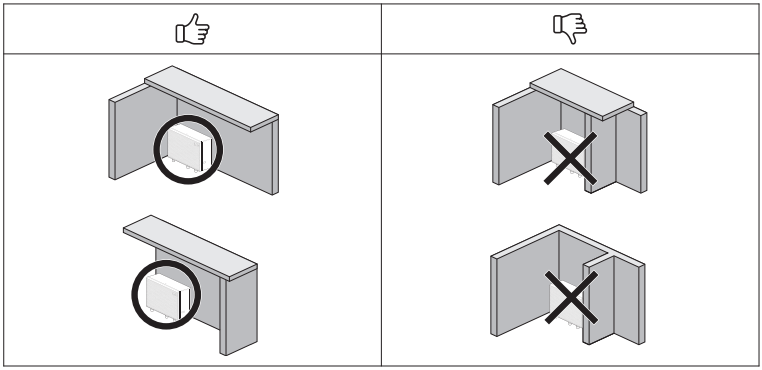

NOTE

- Please do not block the slits in the exterior panels!

※ It can be different by model.

Minimum Operation Space

Following distances around the outdoor unit must be respected under any condition for normal operation. The distances are only for operation not to be seen as safety zone.

Installation space around each unit

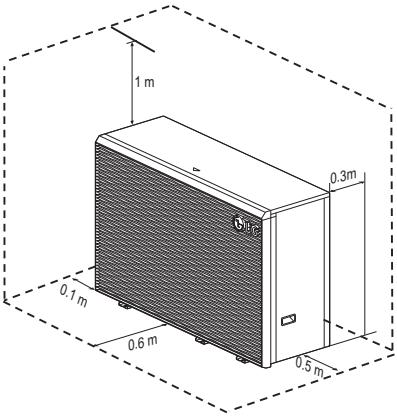

Multiple installation

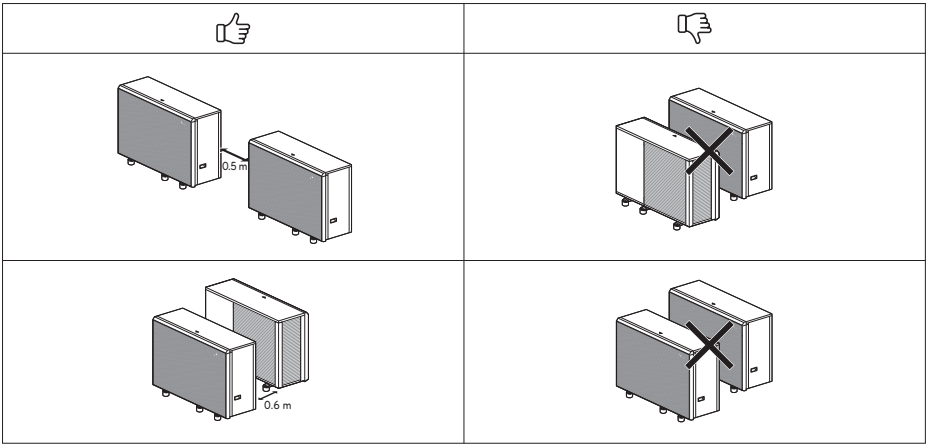

NOTE

- Please make sure to install the products in accordance with EN378.
- If the total R290 refrigerant volume exceeds 5kg, it can be installed in a space with an access level of at least Supervised Access, not General Access.

※ It can be different by model.

Safety Zone

Since the outdoor unit contains flammable refrigerant, a separate safety zone must be defined near the outdoor unit.



⚠ CAUTION

Be very careful for Safety Zone

- There must be no building openings. (windows, doors, roof windows, etc.)
- There must be no external and outlet air openings. (e.g. intakes of central ventilation system)
- There should be no building boundaries, adjacent buildings, passageways, or roads.
- Drainage system inlets, pump shafts, downspouts, and bath lakes should not be present.
- Other grooves, bottoms and shafts must not be present
- There should be no Roof avalanches.
- Ignition sources (such as electrical switches or lamps) must not be used.
- No parts should have a surface temperature higher than 360 °C.
- Open flames are strongly prohibited!

Above special safety precautions must be taken within the areas marked below.

1 Ground installation no obstacle

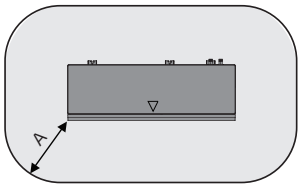

(Unit : mm)

A	1 000

2 Ground installation in front of the wall

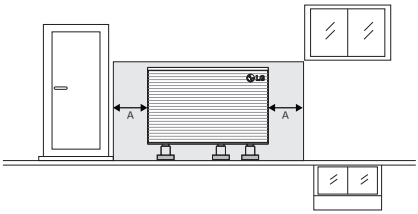

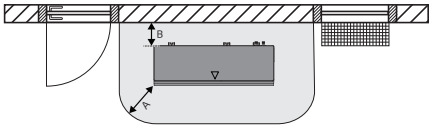

(Unit : mm)

A	1 000
B	300

※ It can be different by model.

3 Ground installation in a corner with wall at the left side

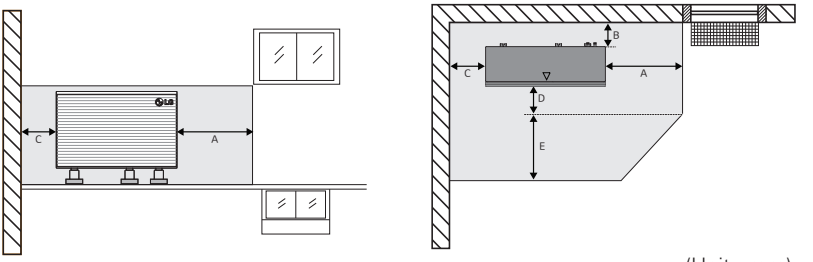

(Unit : mm)

A	1 000
B	300
C	500
D	600
E	1 800

4 Ground installation in a corner with wall at the right side

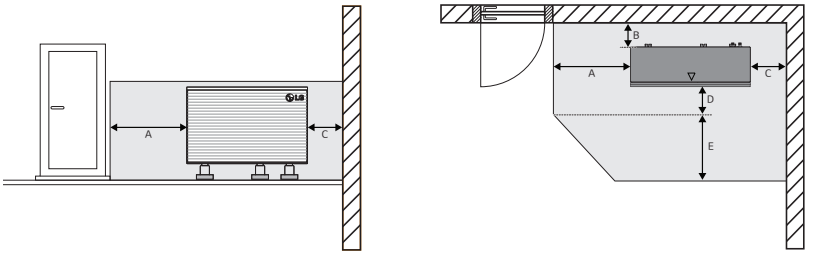

(Unit : mm)

A	1 000
B	300
C	500
D	600
E	1 800

※ It can be different by model.

Installation at Seaside

⚠ CAUTION

- Unit should not be installed in areas where corrosive gases, such as acid or alkaline gas, are produced.
- Do not install the product where it could be exposed to sea wind (salty wind) directly. It can result corrosion on the product. Corrosion, particularly on the condenser and evaporator fins, could cause product malfunction or inefficient performance.
- If outdoor unit is installed close to the seaside, it should avoid direct exposure to the sea wind. Otherwise it needs additional anti-corrosion treatment on the heat exchanger.

Selecting the location(Outdoor Unit)

- If the outdoor unit is to be installed close to the seaside, direct exposure to the sea wind should be avoided. Install the outdoor unit on the opposite side of the sea wind direction.

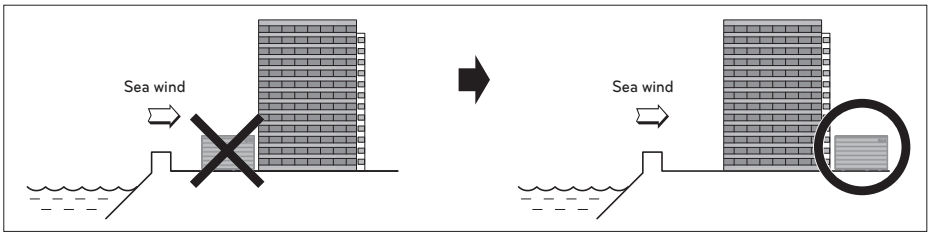

- In case, to install the outdoor unit on the seaside, set up a windbreak not to be exposed to the sea wind.

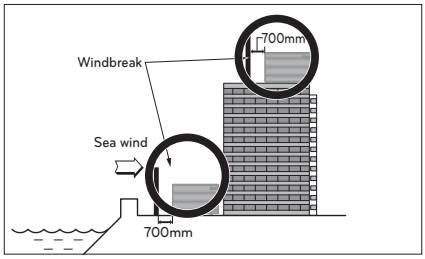

- It should be strong enough like concrete to prevent the sea wind from the sea.
- The height and width should be more than 150% of the outdoor unit.
- It should be keep more than 700 mm of space between outdoor unit and the windbreak for easy air flow.
- Select a well-drained place. Periodic (more than once/year) cleaning of the dust or salt particles stuck on the heat exchanger by using water.
- If you can't meet above guide line in the seaside installation, please contact your supplier for the additional anti-corrosion treatment.

Seasonal wind and cautions in winter

- Sufficient measures are required in a snow area or severe cold area in winter so that product can be operated well.
- Get ready for seasonal wind or snow in winter even in other areas.
- Install a suction and discharge duct not to let in snow or rain.
- Install the outdoor unit not to come in contact with snow directly. If snow piles up and freezes on the air suction hole, the system may malfunction. If it is installed at snowy area, attach the hood to the system.
- Install the outdoor unit at the higher installation console by 500 mm than the average snowfall (annual average snowfall) if it is installed at the area with much snowfall.
- Where snow accumulated on the upper part of the Outdoor Unit by more than 100 mm, always remove snow for operation.

⚠ CAUTION

- The height of H frame must be more than 2 times the snowfall and its width shall not exceed the width of the product. (If width of the frame is wider than that of the product, snow may accumulate)
- Don't install the suction hole and discharge hole of the Outdoor Unit facing the seasonal wind.

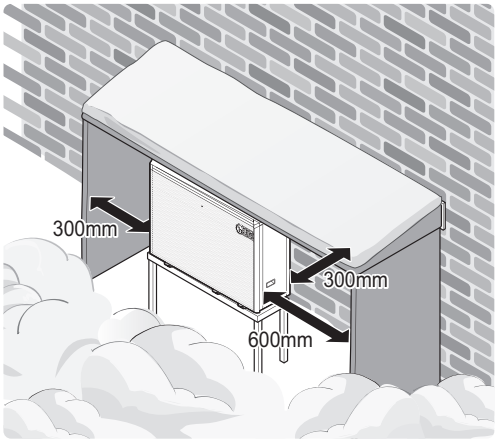

※ It can be different by model.

Transporting the Unit

- When carrying the suspended unit, pass the ropes between legs of base panel under the unit.
- Always lift the unit with ropes attached at four points so that impact is not applied to the unit.
- Attach the ropes to the unit at an angle Ⓐ of 40° or less.
- Use only accessories and parts which are of the designated specification when installing.
- Do not use a forklift without a pallet underneath the unit.
- Be careful not to damage the product when moving the forklift.

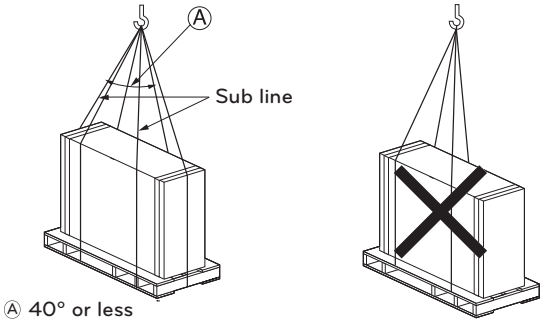

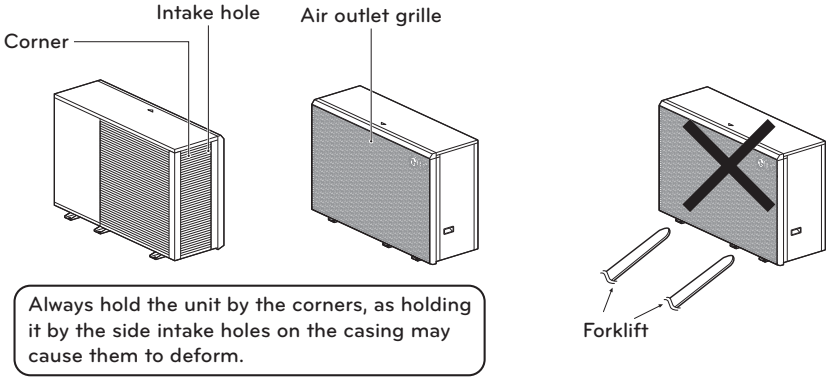

※ It can be different by model.

⚠ CAUTION

Be very careful while carrying the product.

- Do not have only one person carry product if it is more than 20 kg.
- PP bands are used to pack some products. Do not use them as a mean for transportation because they are dangerous.
- Do not touch heat exchanger fins with your bare hands. Otherwise you may get a cut in your hands.
- Tear plastic packaging bag and scrap it so that children cannot play with it. Otherwise plastic packaging bag may suffocate children to death.
- When carrying the unit, be sure to support it at four points.
  Carrying in and lifting with 3-point support may make Outdoor Unit unstable, resulting in a fall.
- Use 2 belts of at least 8 m long.
- Place extra cloth or boards in the locations where the casing comes in contact with the sling to prevent damage.
- Hoist the unit making sure it is being lifted at its center of gravity.
- Do not tilt product by more than the maximum angle of 45°.

1 Put the sling belt (delivered as accessory) through the unit's foot.
2 Carry the unit using the sling belts and the unit's handle (right), and put it onto the installation structure.
3 Remove the sling belts and dispose them.

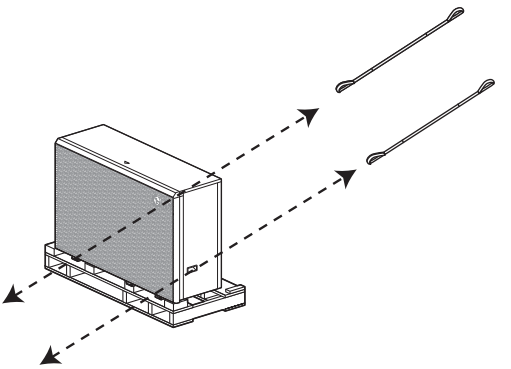

※ It can be different by model.

Foundation for Installation

- Check the strength and level of the installation ground so that the unit will not cause any operating vibration or noise after installation.
- Fix the unit securely by means of the foundation bolts. Prepare 6 sets(4 sets) of M12 foundation bolts, nuts and washers available on the market.
- It is best to screw in the foundation bolts until their length are 20 mm from the foundation surface.
- When installing the unit on the ground, install a separate pedestal with enough height to install the drain nipple and higher than the average snowfall in your area.

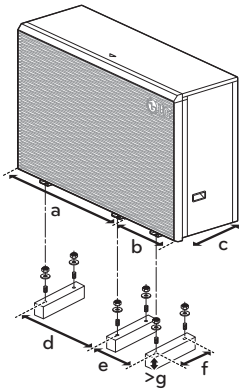

(Unit : mm)

	UB60 Series
a	717
b	381
c	486
d	717
e	381
f	486
g	150

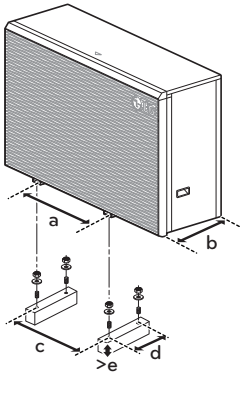

(Unit : mm)

	UA41 Series	UB40, UB41 Series
a	760.6	718.4
b	360	486
c	760.6	718.4
d	360	486
e	150	150

⚠ WARNING

- Be sure that condensate does not discharge onto road to avoid accumulated freezing of condensate

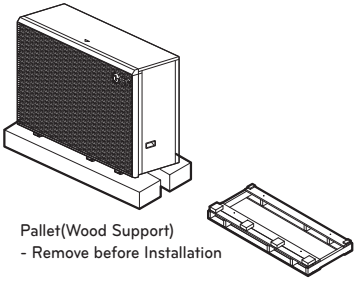

Pallet(Wood Support)
- Remove before Installation

1 Section of condensate drain pipe exposed to open air must be insulated.

2 If condensate is drained into a gravel-bed, the pipe must be directed into frost-free area. The gravel must be able to absorb up to 100 l of condensate per day.

3 If condensate water is drained into a rainwater sewer or other drainage pipe, note the slope of the pipe and make sure the pipe is frost-free.

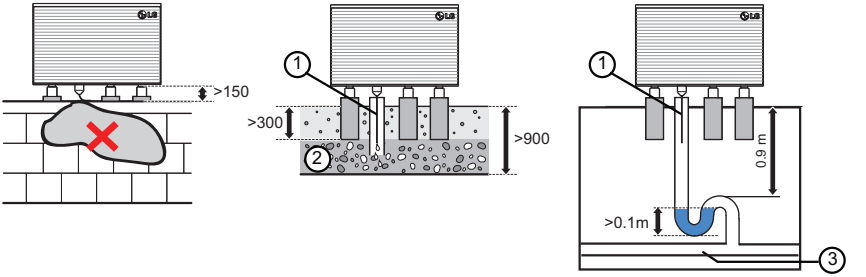

⚠ CAUTION

- Do not connect to a sewer that is connected to the interior, as leaked refrigerant may enter the building.

INSTALLATION OF INDOOR UNIT

The indoor unit should be installed in a room that allows easy access to outdoor unit and heating system both.

In this chapter conditions for installation place is described. In addition, considerations when installing accessories or 3rd party accessories are described, too.

Conditions where Indoor Unit is Installed

Specific conditions are required for installation place such as service space, wall mounting, water pipe length and height, total volume of water, adjusting expansion vessel, and water quality.

General Considerations

Followings are should be considered before the installation of the indoor unit.

- Choose a place with water-resistant floor and access to the drainage system of the house.
- Service space should be secured.
- No flammable materials around the indoor unit.
- Mice can not be appeared to prevent entering the indoor unit or attacking wires.
- Do not place anything in front of the indoor unit to ensure air circulation around the indoor unit.
- Do not place anything below the unit that can be damaged by leaking water.

Service Space

- Ensure that the spaces indicated by arrows around bottom, side, and top side.
- Wider spaces are preferred for easy maintenance and piping.
- If minimum service space is not secured, air circulation can be troubled and internal parts of the indoor unit can be damaged by overheating.

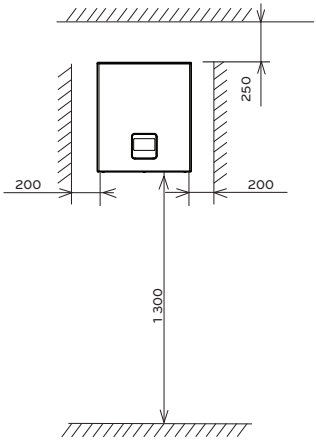

Minimum service space
(unit : mm)

NOTE

- The default setting of the product is for heating only. If cooling function is used, DIP S / W 4 should be turned ON and additional drain pan accessory should be installed.

Mounting to wall

Step 1. Marked releasing six screws.

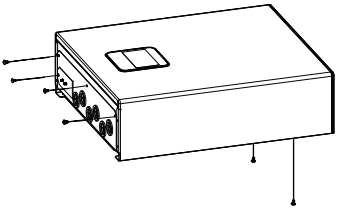

⚠ CAUTION

Use a flat-blade Screwdriver or a coin to remove the remote control case.

Step 2. Open the bracket cover and disconnect the remote control connector.

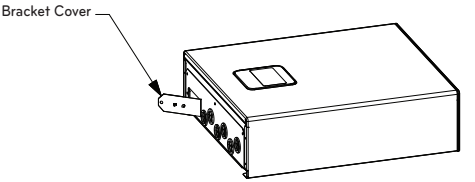

Step 3. Remove the front cover.

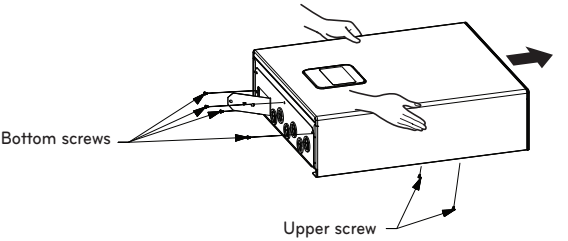

⚠ CAUTION

Do internal wiring work.

Step 4. Attach "Installation Sheet" to the wall and mark the location of bolts.
This sheet helps to find correct location of bolts.

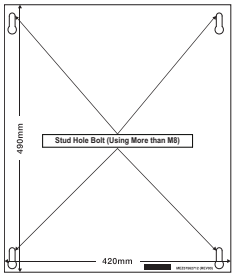

⚠ CAUTION

The attached "Installation sheet" should be level.
If not, the supporting plate and the indoor unit will not be mounted correctly.

Step 5. Detach the Installation sheet. Screw bolts at the hole marks on the wall.
When screwing bolts, use M8 ~ M11 anchor bolts to secure hanging the indoor unit.

NOTE

Self drilling screw can be used as alternatives of M8 ~ M11 anchor bolts. But M8 ~ M11 anchor bolts are more preferred.

Step 6. Hang the indoor unit at the supporting plate.

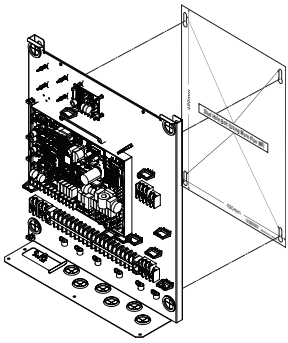

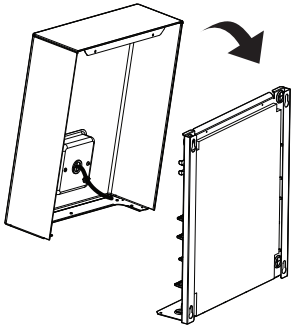

Step 7. Cover the front cover, assemble the remote control connector, close the bracket cover, and marked the four screw bolts below. To prevent the remote control harness from getting caught, place it inside the panel or front before installing it.

NOTE

Should be marked on the bottom of the 4 screws. (Do not fasten the top of the 2 screws.)

ELECTRICAL WIRING

General considerations and warnings

- Follow ordinance of your governmental organization for technical standard related to electrical equipment, wiring regulations and guidance of each electric power company.

⚠ WARNING

- Be sure to have authorized electrical engineers do the electric work using special circuits in accordance with regulations and this installation manual. If power supply circuit has a lack of capacity or electric work deficiency, it may cause an electric shock or fire.

- Install the Unit transmission line away from the power source wiring so that it is not affected by electric noise from the power source. (Do not run it through the same conduit.)
- Be sure to provide designated grounding work to Unit.

⚠ CAUTION

- Be sure to correct the unit to earth. Do not connect earth line to any gas pipe, liquid pipe, lightening rod or telephone earth line. If earth is incomplete, it may cause an electric shock.

- Give some allowance to wiring for electrical part box of Units, because the box is sometimes removed at the time of service work.
- Never connect the main power source to terminal block of transmission line. If connected, electrical parts will be burnt out.
- Only the transmission line specified should be connected to the terminal block for Unit transmission.

⚠ CAUTION

- This product have reversed phase protection detector that only works when the power is turned on. If there exists black out or the power goes on and off which the product is operating, attach a reversed phase protection circuit locally. running the product in reversed phase may break the compressor and other parts.
- Use the 2-core shield cables for communication lines. Never use them together with power lines.
- The conductive shielding layer of cable should be grounded to the metal part of both units.
- Never use multi-core cable
- As this unit is equipped with an inverter, to install a phase leading capacitor not only will deteriorate power factor improvement effect, but also may cause capacitor abnormal heating. Therefore, never install a phase leading capacitor.
- Make sure that the power unbalance ratio is not greater than 2 %. If it is greater, the unit's lifespan will be reduced.
- Introducing with a missing N-phase or with a mistaken N-phase will break the equipment

General Consideration

Followings are should be considered before beginning indoor unit wiring.

- Field-supplied electrical components such as power switches, circuit breakers, wires, terminal boxes, etc should be properly chosen with compliance with national electrical legislation or regulation.
- Make it sure that supplied electricity is enough to operate the product including outdoor unit, electric heater, water tank heater, etc. The capacity of fuse also selected according to the power consumption.
- The main electricity supply should be dedicated line. Sharing main electricity supply with other devices such as washing machine or vacuum cleaner is not permitted.

⚠ CAUTION

- Before starting wiring job, the main electricity supply should be turned off until wiring is completed.
- When adjusting or changing wiring, the main electricity supply should be turned off and ground wire should be connected securely.
- Installation place should be free from the attack of wild animal. For example, mice's wire attacking or frog's entering into the indoor unit may cause critical electrical accident.
- All power connections should be protected from dew condensation by thermal insulation.
- All electrical wiring should comply with national or local electrical legislation or regulation.
- The ground should be connected exactly. Do not earth the product to the copper pipe, steel fence at the veranda, city water outlet pipe, or any other conductivity materials.
- Fix all cable using cord clamp tightly. (When cable is not fixed with cord clamp, use additionally supplied cable ties.)

When the connection line between the indoor unit and outdoor unit is over 40 m, connect the telecommunication line and power line separately.

In order to avoid a hazard due to inadvertent resetting of the thermal cut-out, this appliance must not be supplied through an external switching device, such as a timer, or connected to a circuit that is regularly switched on and off by the utility.

If the supply cord is damaged, it must be replaced by the manufacturer, its service agent or similarly qualified persons in order to avoid a hazard.

The installation of a residual current device (RCD) having a rated residual operating current not exceeding 30 mA is advisable.

Point for attention regarding quality of the public electric power supply

- European/International Technical Standard setting the limits for voltage changes, voltage fluctuations and flicker in public low-voltage supply systems for equipment with rated current ≤ 75 A.
- European/International Technical Standard setting the limits for harmonic currents produced by equipment connected to public low-voltage systems with input current ≤16 A of > 75 A per phase.

The Outdoor unit (HM091HF UB40, HM071HF UB40, HM091HFD# UA41, HM071HFD# UA41, HM051HFD# UA41)

This equipment complies with IEC (EN) 61000-3-12 in harmonic currents emission limits corresponding Rsce =33.

This equipment complies with IEC (EN) 61000-3-3.

The Outdoor unit (HM093HF UB40, HM073HF UB40)

This equipment complies with IEC (EN) 61000-3-12 provided that the short-circuit power Ssc is greater than or equal to 1339 kVA at the interface point between the user's supply and the public system. It is the responsibility of the installer or user of the equipment to ensure, by consultation with the distribution network operator if necessary, that the equipment is connected only to a supply with a short-circuit power Ssc greater than or equal to 1339 kVA.

This equipment complies with IEC (EN) 61000-3-3.

The Outdoor unit (HM093HFD# UA41, HM073HFD# UA41)

This equipment complies with IEC (EN) 61000-3-12 provided that the short-circuit power Ssc is greater than or equal to 2294 kVA at the interface point between the user's supply and the public system. It is the responsibility of the installer or user of the equipment to ensure, by consultation with the distribution network operator if necessary, that the equipment is connected only to a supply with a short-circuit power Ssc greater than or equal to 2294 kVA.

This equipment complies with IEC (EN) 61000-3-3.

The Outdoor unit (HM161HF UB60, HM141HF UB60, HM121HF UB60, HM161HFD# UB41, HM141HFD# UB41, HM121HFD# UB41)

This equipment complies with IEC (EN) 61000-3-12 in harmonic currents emission limits corresponding Rsce =33.

This equipment complies with IEC (EN) 61000-3-3.

The Outdoor unit (HM163HF UB60, HM143HF UB60, HM123HF UB60, HM093HFX UB60)

This equipment complies with IEC (EN) 61000-3-12.

This equipment complies with IEC (EN) 61000-3-3.

The Outdoor unit (HM163HFD# UB41, HM143HFD# UB41, HM123HFD# UB41)

This equipment complies with IEC (EN) 61000-3-12 provided that the short-circuit power Ssc is greater than or equal to 2819 kVA at the interface point between the user's supply and the public system. It is the responsibility of the installer or user of the equipment to ensure, by consultation with the distribution network operator if necessary, that the equipment is connected only to a supply with a short-circuit power Ssc greater than or equal to 2819 kVA.

This equipment complies with IEC (EN) 61000-3-3.

The Indoor unit

This equipment complies with IEC (EN) 61000-3-2.

This equipment complies with IEC (EN) 61000-3-12 in harmonic currents emission limits corresponding Rsce =33.

This equipment complies with IEC (EN) 61000-3-3.

This device is intended for the connection to a power supply system with a maximum permissible system impedance Z_{MAX} of 0.4305 Ω at the interface point (power service box) of the user's supply. The user has to ensure that this device is connected only to a power supply system which fulfills the requirement above. If necessary, the user can ask the public power supply company for the system impedance at the interface point.

⚠ CAUTION

After checking and confirming following conditions, start wiring work.

- Secure dedicated power source for the Air-to-Water heat pump. The wiring diagram (attached inside the control box of the unit) is presenting related information.
- Provide a circuit breaker switch between power source and the outdoor unit.
- Although it is very rare case, sometimes the screws used to fasten internal wires can be loosen due to the vibration while product transportation.
  Check these screws and make it sure if they are all fastened tightly. If not tightened, burn-out of the wire can be occurred.
- Check the specification of power source such as phase, voltage, frequency, etc.
- Confirm that electrical capacity is sufficient.
- Be sure that the starting voltage is maintained at more than 90 percent of the rated voltage marked on the name plate.
- Confirm that the cable thickness is as specified in the power sources specification. (Particularly note the relation between cable length and thickness.)
- Provide an ELB(electric leakage breaker) when the installation place is wet or moist.
- The following troubles would be caused by abnormal voltage supply such as sudden voltage increasing or voltage drop-down.
  - Chattering of a magnetic switch (frequent on and off operation)
  - Physical damage of parts where magnetic switch is contacted
  - Break of fuse
  - Malfunction of overload protection parts or related control algorithms.
  - Failure of compressor start up
- Ground wire to ground outdoor unit to prevent electrical shock.

Precautions when laying power wiring

Use round pressure terminals for connections to the power terminal block.

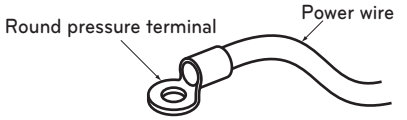

When none are available, follow the instructions below.

- Do not connect wiring of different thicknesses to the power terminal block. (Slack in the power wiring may cause abnormal heat.)
- When connecting wiring which is the same thickness, do as shown in the figure below.

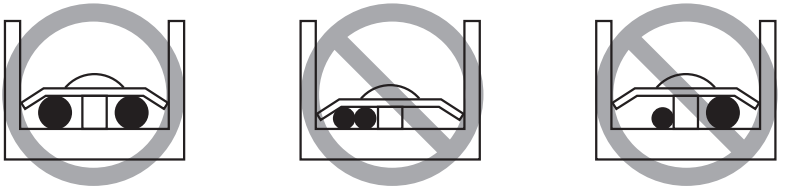

- For wiring, use the designated power wire and connect firmly, then secure to prevent outside pressure being exerted on the terminal block.
- Use an appropriate manual screwdriver instead of electric screwdriver for tightening the terminal screws. A screwdriver with a small head will strip the head and make proper tightening impossible.
- Over-tightening the terminal screws may break them.

⚠ WARNING

Make sure that the screws of the terminal are free from looseness.

Perform the electrical wiring work according to the electrical wiring connection.

- All wiring must comply with local requirements.
- Select a power source that is capable of supplying the current required by the unit.
- Use a recognized ELCB(Electric Leakage Circuit Breaker) between the power source and the unit. A disconnection device to adequately disconnect all supply lines must be fitted.
- Model of circuit breaker recommended by authorized personnel only

*Pipes and wires should be purchased separately for installation of the product.

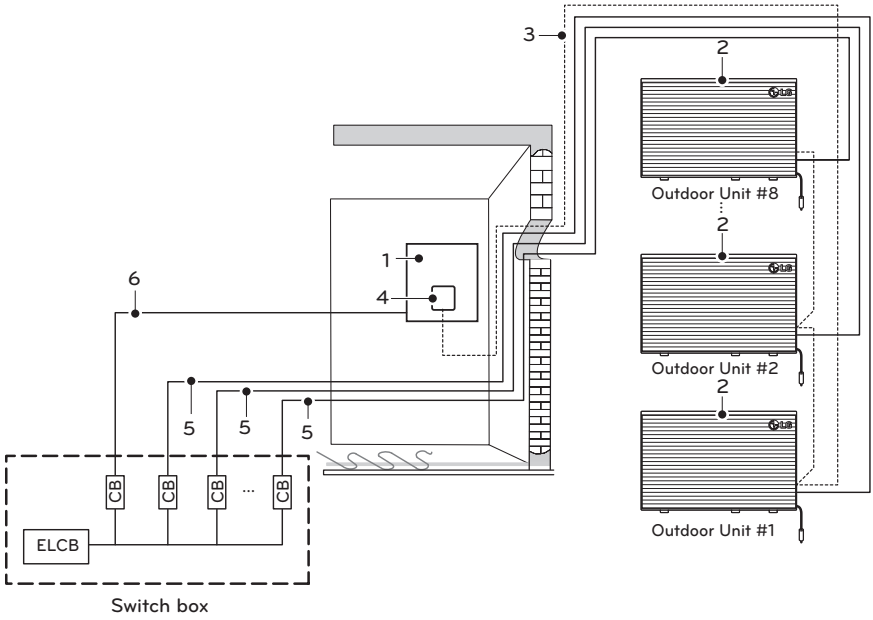

※ It can be different by model.

Description

No	Name	No	Name
1	Cascade control unit	4	Remote controller
2	Outdoor unit	5	Power supply outdoor unit
3	Communication cable	6	Power supply indoor unit

ELCB : Earth-leakage circuit breaker
CB : Circuit breaker

Specification of wires and circuit breakers

	Model name (Buyer)	Power supply	Max. current	Circuit breaker	Power cable (incl. Earth)	Cable spec
Power supply Outdoor Unit	HM163HF	380-415 V 50 Hz	16.1 A	16 A	2.5 mm² x 5C	H07RN-F
	HM143HF	380-415 V 50 Hz	16.1 A	16 A	2.5 mm² x 5C	H07RN-F
	HM123HF	380-415 V 50 Hz	16.1 A	16 A	2.5 mm² x 5C	H07RN-F
	HM093HFX	380-415 V 50 Hz	16.1 A	16 A	2.5 mm² x 5C	H07RN-F
	HM161HF	220-240 V 50 Hz	23 A	25 A	2.5 mm² x 3C	H07RN-F
	HM141HF	220-240 V 50 Hz	23 A	25 A	2.5 mm² x 3C	H07RN-F
	HM121HF	220-240 V 50 Hz	23 A	25 A	2.5 mm² x 3C	H07RN-F
	HM091HF	220-240 V 50 Hz	17 A	20 A	2.5 mm² x 3C	H07RN-F
	HM093HF	380-415 V 50 Hz	16.1 A	16 A	2.5 mm² x 5C	H07RN-F
	HM071HF	220-240 V 50 Hz	17 A	20 A	2.5 mm² x 3C	H07RN-F
	HM073HF	380-415 V 50 Hz	16.1 A	16 A	2.5 mm² x 5C	H07RN-F
	HM161HFD#	220-240 V 50 Hz	28A	32A	4.0 mm² x 3C	H07RN-F
	HM141HFD#	220-240 V 50 Hz	28A	32A	4.0 mm² x 3C	H07RN-F
	HM121HFD#	220-240 V 50 Hz	28A	32A	4.0 mm² x 3C	H07RN-F
	HM163HFD#	380-415 V 50 Hz	16.1A	16A	2.5 mm² x 5C	H07RN-F
	HM143HFD#	380-415 V 50 Hz	16.1A	16A	2.5 mm² x 5C	H07RN-F
	HM123HFD#	380-415 V 50 Hz	16.1A	16A	2.5 mm² x 5C	H07RN-F
	HM091HFD#	220-240 V 50 Hz	22A	25A	4.0 mm² x 3C	H07RN-F
	HM071HFD#	220-240 V 50 Hz	20A	25A	4.0 mm² x 3C	H07RN-F
	HM051HFD#	220-240 V 50 Hz	17A	20A	4.0 mm² x 3C	H07RN-F
	HM093HFD#	380-415 V 50 Hz	16.1A	16A	2.5 mm² x 5C	H07RN-F
	HM073HFD#	380-415 V 50 Hz	16.1A	16A	2.5 mm² x 5C	H07RN-F
Communication cable	-	-	-	-	0.75 mm² x 2C (shielded)	LiYCY
Power supply Indoor unit	PHCM0	220-240 V 50 Hz	0.6 A	10 A	0.75 mm² x 3C	H07RN-F

※ Recommended diameter is feasible up to 20 m cable length. In any case, the diameter must be verified by professional electrician based on national rules and standards.

※ Select a circuit breaker and power cable suitable for 3rd party DHW boost heater and backup heater capacity.

⚠ CAUTION

The power cord should be complied with IEC 60245 or HD 22.4 S4 (This equipment shall be provided with a cord set complying with the national regulation.)

- Power supply outdoor unit

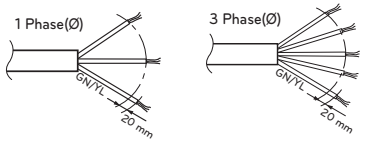

- Power supply indoor unit

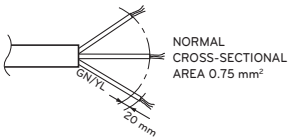

- Communication cable

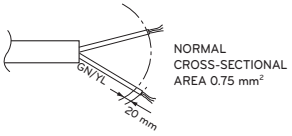

- Power supply Backup heater and Boost heater (optional)

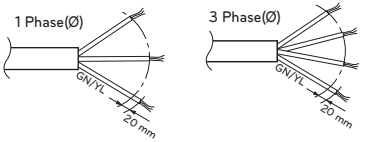

Electrical connections at outdoor unit

1 Disassemble Side panel and cover of control box from the outdoor unit

UB60 Series

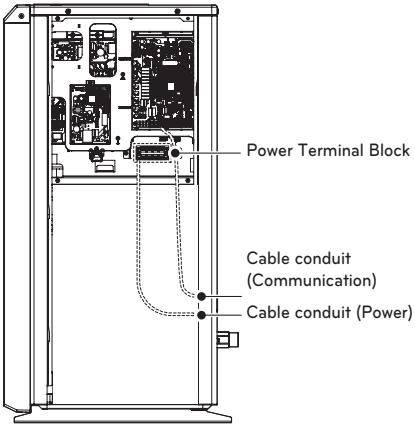

UB40 Series

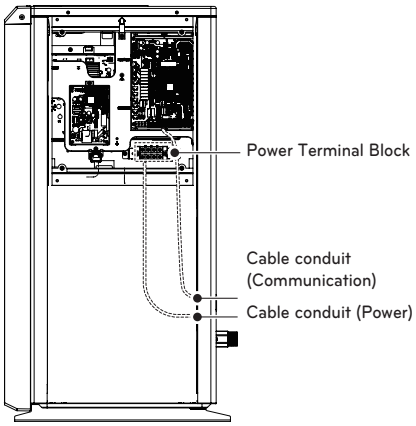

2 Connect power cable to main Power terminal
The earth cable is connected to the Control box case where earth symbol is ⏚ marked.

3 Use cable clamps (or cord clamps) to prevent unintended move of power cable.

4 Reassemble Side panel and cover to the outdoor unit by fastening screws.

Failure to do these instruction can result in fire, electric shock or death.
- Make sure the power cable do not touch to copper tube.
- Make sure to fix [cord clamp] firmly to sustain the connection of terminal.

※ It can be different by model.

1 Disassemble Side panel and cover of control box from the outdoor unit

UA41, UB41 Series

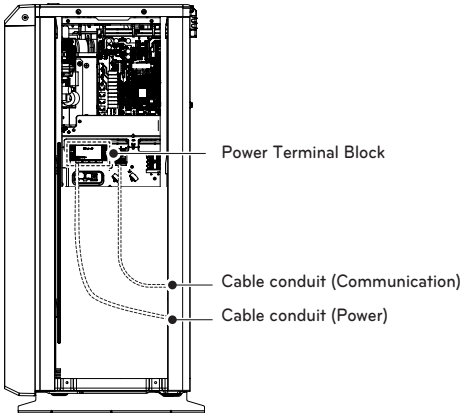

2 Connect power cable to main Power terminal
The earth cable is connected to the Control box case where earth symbol is ⏚ marked.

3 Use cable clamps (or cord clamps) to prevent unintended move of power cable.

4 Reassemble Side panel and cover to the outdoor unit by fastening screws.

Failure to do these instruction can result in fire, electric shock or death.
- Make sure the power cable do not touch to copper tube.
- Make sure to fix [cord clamp] firmly to sustain the connection of terminal.

Electrical connections at indoor unit

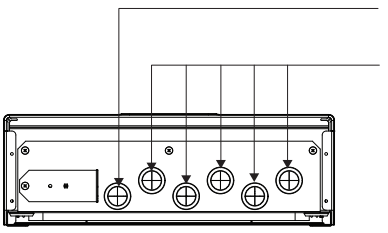

Connection for communication with indoor unit and outdoor units

Step 1. Disassemble front cover from cascade control unit.

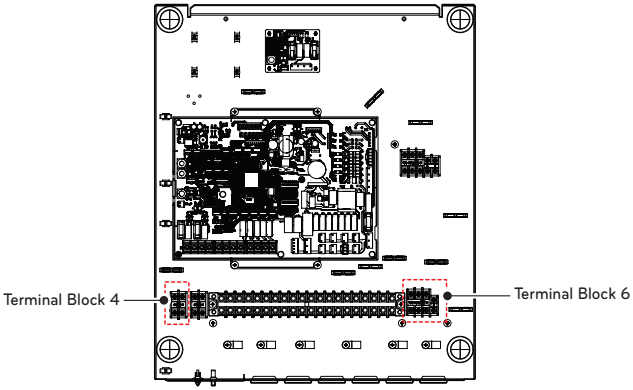

Step 2. Connect power cable to Terminal Block 6 in cascade control unit.

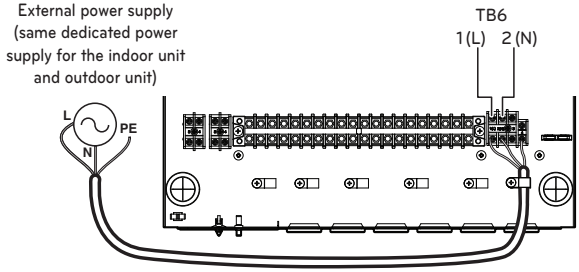

Step 3. Connect communication cable to Terminal Block 4 in cascade control unit.
Step 4. Connect communication cable to Outdoor PCB terminal block in outdoor unit.

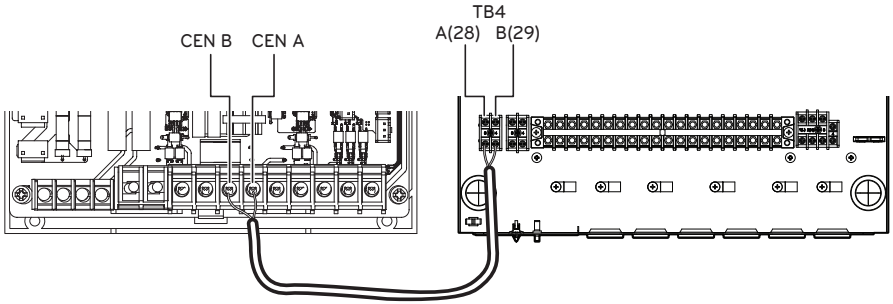

Step 5. Connect communication cable between outdoor units.

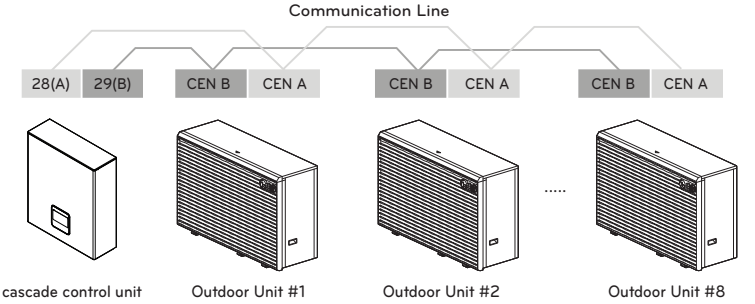

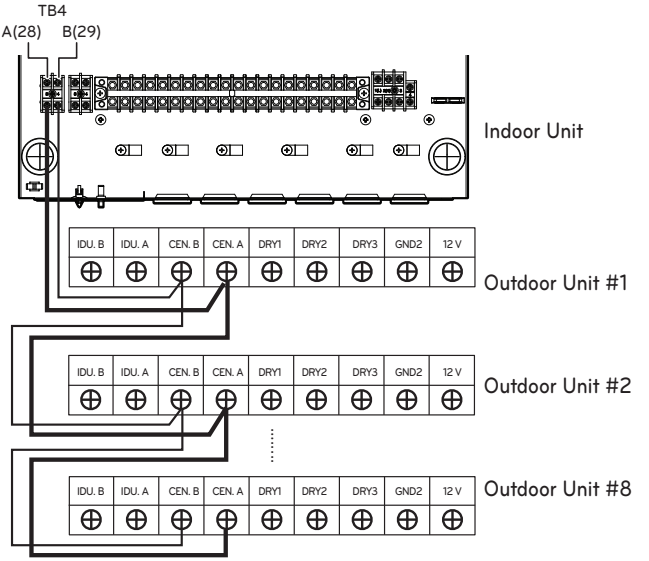

※ Please make sure to connect A only to A, and B only to B, and be careful not to cross each other.

Step 6. Reassemble front cover to cascade control unit.

⚠ CAUTION

You should separate the communication wiring, in case of communication wiring length is over 40 m.

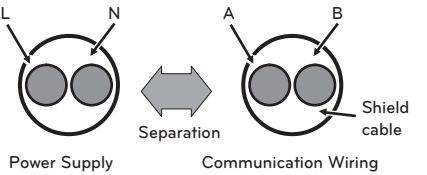

Zone and number setting of outdoor units

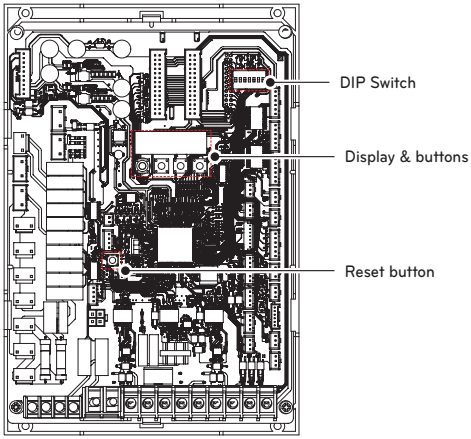

Step 1. Set DIP switch No. 6 to "ON" to set outdoor unit's zone and number.

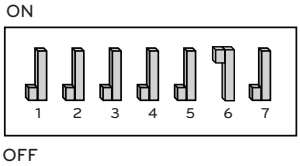

NOTE

The default setting of DIP switch is all OFF from 1 to 7.

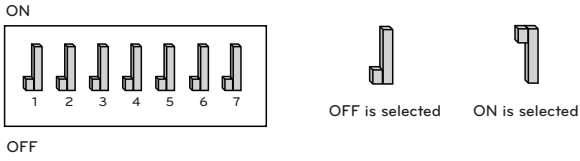

⚠ CAUTION

Turn off electric power supply before setting DIP switch

- Whenever adjusting DIP switch, turn off electric power supply to avoid electric shock.

Step 2. Turn on electric power supply. After supplying power, the display will light up. And set the outdoor unit's zone first.

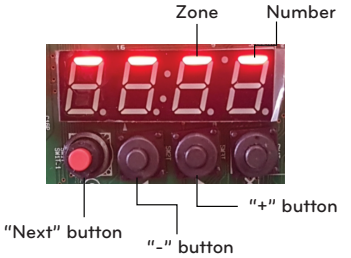

Step 3. Set the outdoor unit's zone using "+", "-" button. If you complete to set the outdoor unit's zone, press "Next" button.

NOTE

Please refer to the table below for outdoor unit operation modes depending on the zone setting.

Zone	Mode	Cooling	Heating	DHW
0	Cooling + Heating + DHW	●	●	●
1	Cooling only	●		
2	Heating only		●	
3	DHW only			●
4	Cooling + DHW	●		●
5	Heating + DHW		●	●
6	Cooling + Heating	●	●	

Step 4. Set the outdoor unit's number using "+", "-" button. If you complete to set the outdoor unit's number, press "Next" button.

NOTE

The number is a unique number of the outdoor unit, so it must not be duplicated.

Step 5. Turn off electric power supply. And Set DIP switch No. 6 to "OFF".

Step 6. Reassemble Side panel and cover to the outdoor unit by fastening screws.

NOTE

You can see zone setting of outdoor units by using the remote controller.

• Main screen ⟶ Menu ⟶ Setting ⟶ Installer settings ⟶ Cascade ⟶ Group configuration

For setting the number of outdoor units and matching ODU address with outdoor unit's number, please refer to chapter 'Installer settings'

After zone and number setting of outdoor units

For example, if you set zone and number of 4 outdoor units like table below, it will operate like figure below.

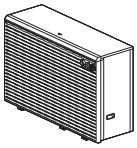
Outdoor Unit 1

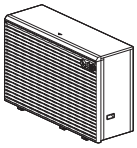
Outdoor Unit 2

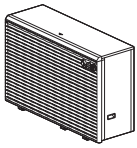
Outdoor Unit 3

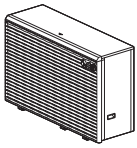
Outdoor Unit 4

		ODU 1		ODU 2		ODU 3		ODU 4	
ODU PCB segment		0	1	2	2	5	3	1	4
Note		Cooling+ Heating+ DHW	ODU #1	Heating	ODU #2	Heating+ DHW	ODU #3	Cooling	ODU #4
Operating	Heating	●		●		●			
	DHW	●				●			
	Cooling	●						●	

※ In order to use DHW or cooling function, DIP switch SW2 on IDU PCB must be set accordingly (refer to Configuration chapter).

- Case 1 : Heating

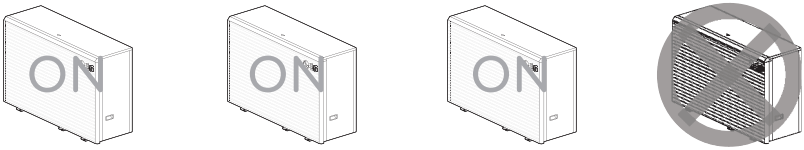

- Case 2 : DHW

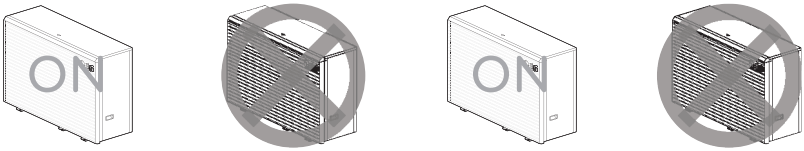

- Case 3 : Cooling

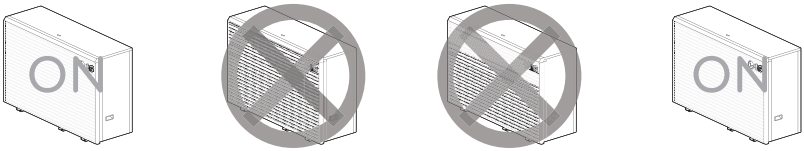

Terminal Block Information

Symbols used below pictures are as follows :

- L, L1, L2 : Live (230 V AC)
- N : Neutral (230 V AC)
- BR : Brown, WH : White, BL : Blue, BK : Black

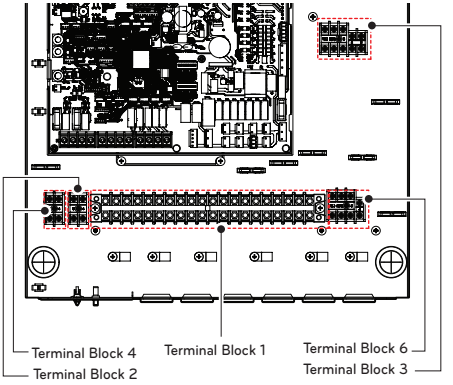

Terminal Block 1

1	2	3	4	5	6	7	8	9	10	11	12	13	14	15	16	17	18	19	20
A	B	L	N	L	N	L	N	L1	L2	N	L	L1	N	L1	L2	N	L	N	
CLOUD GATEWAY		WATER PUMP (C)		WATER PUMP (B)		MIX PUMP		MIX VALVE			3WAY VALVE (A)			2WAY VALVE (A)			WATER TANK HEATER		

- WATER PUMP (C): Energizing water pump for DHW-recirculation
- WATER PUMP (B): Energizing water pump for solar thermal system
- MIX PUMP / MIX VALVE: Power supply for 2nd circuit heating kit
- 3WAY VALVE (A): Water flow switching between space heating and DHW tank heating
- 2WAY VALVE (A): Closing other circuits during cooling operation
- WATER TANK HEATER: Turn on or off booster heater

Terminal Block 2

21	22
A	B
3rd PARTY CONTROLLER (5V DC)	

Connection for 3rd party controller or Modbus RTU or Metering module (5 V DC)

Terminal Block 3

23	24	25	26	27
L	N	L1	L2	L3
THERMOSTAT (Default : 230 V AC)				

Terminal Block 4

28	29
A	B
OUTDOOR UNIT	

Connection for communication

Terminal Block 6

1 (L)	2 (L)		⏚
L	N		⏚
POWER SUPPLY 220-240 V, 50 Hz			

Power supply for indoor unit

How to wire thermistor for Cascade control unit



Cascade inlet temperature sensor



Cascade outlet temperature sensor



Sensor Holder



Sensor Connector

Follow below procedures step 1 ~ step 4.

Step 1. Install sensor connector to main inlet/outlet pipe.
(Welding must be performed to connect the sensor connector to the pipe)

Step 2. Check if the power of the unit is turned off.

Step 3. Fasten the sensor connector to the sensor holder as shown in the figure below.

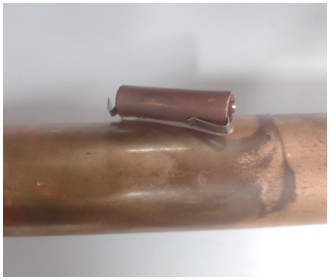

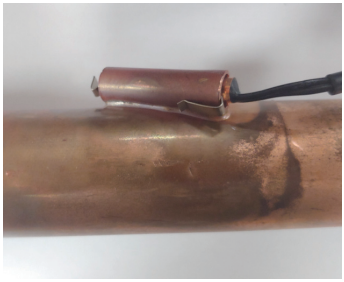

Step 4. Insert connector(Blue) of the cascade inlet temperature sensor to connector(Blue) of the middle link harness. Also Insert connector(Red) of the cascade outlet temperature sensor to connector(Red) of the middle link harness as shown below.

※ The middle link harness is inserted into PCB(CN_TH3).

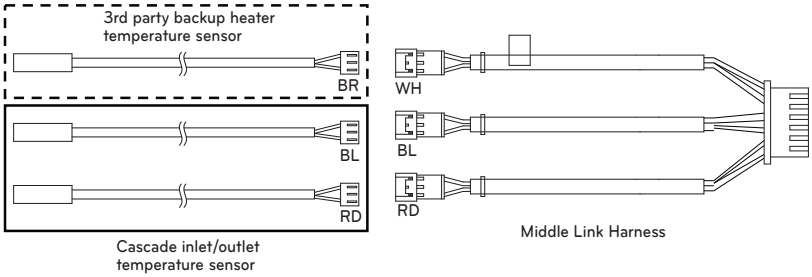

※ For more information about 3rd party backup heater temperature sensor, please refer to chapter '3rd party backup heater'.

WATER PIPING

Procedures about water piping are described in this chapter.

Water piping and water circuit connection, water charging, pipe insulations will be shown for water piping procedures.

Accessories connection, such as sanitary water tank, thermostat, 3way or 2way valves, etc will be dealt in separated chapter.

Water Piping and Water Circuit Connection

⚠ CAUTION

General Considerations

Followings are should be considered before beginning water circuit connection.

- Service space should be secured.
- Water pipes and connections should be cleaned using water.
- Space for installing external water pump should be provided if internal water pump capacity is not enough for installation field.
- Never connect electric power while proceeding water charging.

Definition of terms are as follow :

- Water piping : Installing pipes where water is flowing inside the pipe.
- Water circuit connecting : Making connection between the product and water pipes or between pipes and pipes. Connecting valves or elbows are, for example, in this category.

All connections should be complied with presented diagram.

While installing water pipes, followings should be considered :

- While inserting or putting water pipes, close the end of the pipe with pipe cap to avoid dust entering.
- When cutting or welding the pipe, always be careful that inner section of the pipe should not be defective. For example, no weldments or no burrs are found inside the pipe.
- Drain piping should be provided in case of water discharge by operation of the safety valve, drain from condensate, and snow or rain. This situation can be happened when the internal pressure is over 3.0 bar and water inside the indoor unit will be discharged to drain hose.
- In a cold climate region, water drainage must be frost-proof.

While connecting water pipes, followings should be considered.

- Pipe fittings (e.g. L-shape elbow, T-shape tee, diameter reducer, etc) should be tightened strongly to be free from water leakage.
- Connected sections should be leakage-proof treatment by applying teflon tape, rubber bushing, sealant solution, etc.
- Appropriate tools and tooling methods should be applied to prevent mechanical breakage of the connections.
- Drain hose should be connected with drain piping.
- Maximum allowable Torque at the water piping connection is 50 N·m

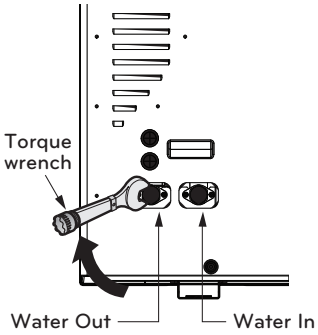

⚠ WARNING

Water condensation on the floor

While cooling operation using the underfloor heating, it is very important to keep leaving water temperature higher than 16 °C. Otherwise, dew condensation can be occurred on the floor.
If floor is in humid environment, do not set leaving water temperature below 18 °C.

Water condensation on the radiator

While cooling operation, cold water may not flow to the radiator. If cold water enters to the radiator, dew generation on the surface of the radiator can be occurred.

Drainage treatment

While cooling operation, condensed dew can drop down to the bottom of the indoor unit. In this case, prepare drainage treatment (for example, vessel to contain condensed dew) to avoid water drop. Additional drain pan accessory should be installed to prevent dew to be formed.

How to install downward water piping

It is possible to change the piping direction from backside to downward using the downward piping kit. It should be purchased and installed separately.

[HM071HF UB40 / HM073HF UB40]
[HM091HF UB40 / HM093HF UB40]

1. Remove 2 existing rubber pipes

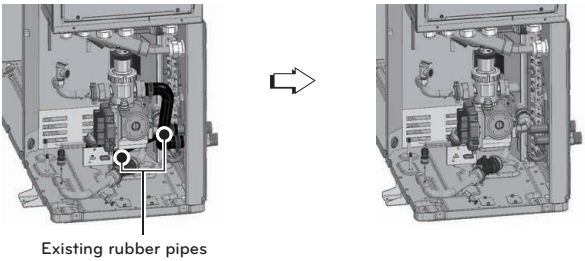

2. Change direction of 2 brass connectors

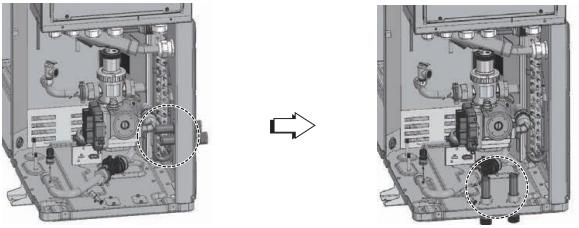

3. Install the delivered rubber pipes kit

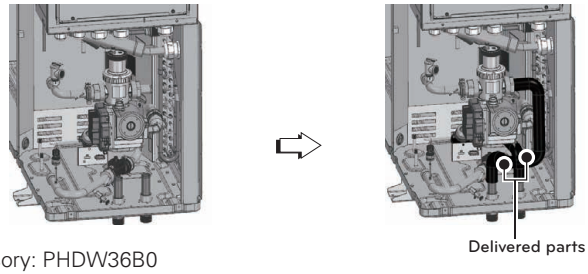

*Required accessory: PHDW36B0

⚠ WARNING

Do not forget to use delivered clamps to fix rubber pipes, Otherwise water leakage may occur.

NOTE

When the work is completed, move 2 brackets from the base pan to the rear panel and screw them.

[HM121HF UB60 / HM123HF UB60]
[HM141HF UB60 / HM143HF UB60]
[HM161HF UB60 / HM163HF UB60 / HM093HFX UB60]

1. Remove 2 existing rubber pipes

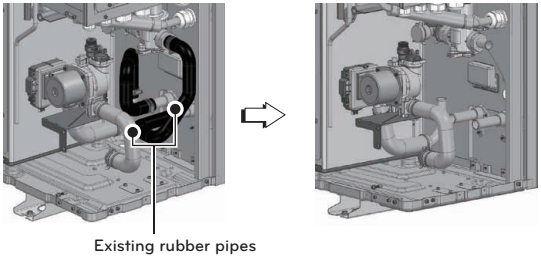

2. Change direction of 2 brass connectors

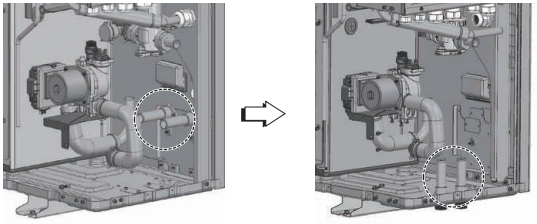

3. Install the delivered rubber pipes kit

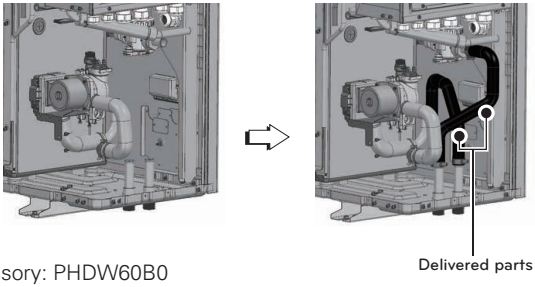

*Required accessory: PHDW60B0

⚠ WARNING

Do not forget to use delivered clamps to fix rubber pipes, Otherwise water leakage may occur.

NOTE

When the work is completed, move 2 brackets from the base pan to the rear panel and screw them.

Water Charging

For water charging, please follow below procedures.

Step 1. Open all valves of whole water circuit. Supplied water should be charged not only inside the indoor unit, but also in the under floor water circuit, sanitary water tank circuit, FCU water circuit, and any other water circuits controlled by the product.

Step 2. Connect supply water into drain valve and fill valve.

Step 3. Start to supply water. While supplying water, following should be kept.
- Pressure of supplying water should be pre-adjust value approximately.
- For supplying water pressure, time to be taken from 0 bar to pre-adjust value should be more than 1 minute. Sudden water supply can yield water drain through safety valve.
- Fully open the cap of air vent to assure air purging. If air is exist inside the water circuit, then performance degrade, noise at the water pipe, mechanical damage at the surface of electric heater coil.
- Open both the air vent in the water pipe and the air vent in the pump.

Step 4. Stop water supplying when the pressure gauge located in front of the control panel indicates pre-adjust value. Stop water supplying when the pressure located in remote control indicates pre-adjust value.

Step 5. Close drain valve and fill valve. Then wait for 20~30 seconds to observe water pressure being stabilized.

Step 6. If following conditions are satisfactory, then check the pipe insulation. Otherwise, go to step 3.
- Pressure gauge indicates pre-adjust value. Note that sometimes pressure in decreased after step 5 due to water charging inside expansion vessel.
- No air purging sound is heard or no water drop are popping out from air vent.

⚠ CAUTION

Keep the air vent of the water pipe open and keep the air vent of the pump closed.
Otherwise, the pump may make noise. Close all air vents once water is spilled from the vents.

Pipe Insulation

Purpose of water pipe insulation is :

- To prevent heat loss to external environment
- To prevent dew generation on the surface of the pipe in cooling operation
- Minimum insulation thickness recommendations
  ensure correct operation of the product, but local regulations may vary and must be followed.
- If Cooling function is used, the type of insulation must be suited for cold water and all joints must be sealed tightly to prevent that the insulation becomes wet from the inside.

Water Piping length (m)	Minimum insulation Thickness(mm)
<20	20
20~30	30
30~40	40
40~50	50

* λ = 0.04 W/mk (Thermal conductivity of pipe insulation)

Water pump Capacity

The water pump is variable type which is capable to change flow rate, so it may be required to change default water pump capacity in case of noise by water flow. In most case, however, it is strongly recommended to set capacity as Maximum.

Pressure Drop

NOTE

When installing the product, install additional pump in consideration of the pressure loss and pump performance. If flow rate is low, overloading of product can occur

For GRUNDFOS Water Pump

Capacity [kW]	Rated flow-rate [LPM(m^3/h)]	Pump Head [m] (At rated flow rate)	Product pressure drop [m] (Plate heat exchanger)	Serviceable Head [m]
5	15.8 (0.9)	7.5	0.2	7.3
7	20.1 (1.2)	7.3	0.3	7.0
9*	25.9 (1.6)	6.1	0.4	5.7
9**	25.9 (1.6)	10.0	0.4	9.6
12	34.5 (2.1)	9.8	0.8	9.0
14	40.3 (2.4)	9.3	1.1	8.2
16	46.0 (2.8)	8.3	1.4	6.9

For OH SUNG Water Pump

Capacity [kW]	Rated flow-rate [LPM(m^3/h)]	Pump Head [m] (At rated flow rate)	Product pressure drop [m] (Plate heat exchanger)	Serviceable Head [m]
5	15.8 (0.9)	10.9	0.2	10.7
7	20.1 (1.2)	10.7	0.3	10.4
9	25.9 (1.6)	10.3	0.4	9.9
12	34.5 (2.1)	9.7	0.8	8.9
14	40.3 (2.4)	9.1	1.1	8.0
16	46.0 (2.8)	8.5	1.4	7.1

*: UB40
**: UB60

OH SUNG Water Pump (For individual unit)

Capacity [kW]	Rated flow-rate [LPM(m^3/h)]	Pump Head [m] (At rated flow rate)	Product pressure drop [m] (Plate heat exchanger)	Serviceable Head [m]
5	15.8 (0.9)	10.9	0.2	10.7
7	20.1 (1.2)	10.7	0.3	10.4
9	25.9 (1.6)	10.3	0.4	9.9
12	34.5 (2.1)	9.7	0.8	8.9
14	40.3 (2.4)	9.1	1.1	8.0
16	46.0 (2.8)	8.5	1.4	7.1

OH SUNG Water Pump (For cascade control unit)

Capacity [kW]	Rated flow-rate [m^3/h]						
	2 ODUs	3 ODUs	4 ODUs	5 ODUs	6 ODUs	7 ODUs	8 ODUs
5	1.8	2.7	3.6	4.5	5.4	6.3	7.2
7	2.4	3.6	4.8	6.0	7.2	8.4	9.6
9	3.2	4.8	6.4	8.0	9.6	11.2	12.8
12	4.2	6.3	8.4	10.5	12.6	14.7	16.8
14	4.8	7.2	9.6	12	14.4	16.8	19.2
16	5.6	8.4	11.2	14	16.8	19.6	22.4

Performance curve

GRUNDFOS Water Pump : UPM3K GEO 20 – 75 CHBL

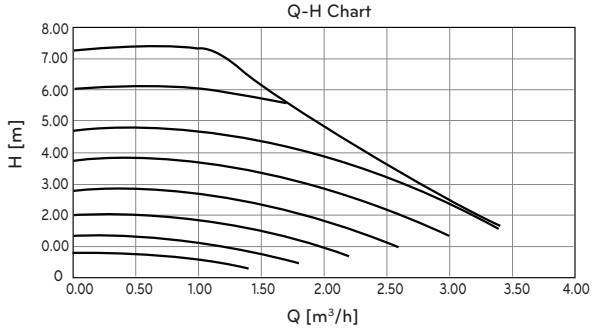

GRUNDFOS Water Pump : UPM4K GEO 20 – 75 CHBL

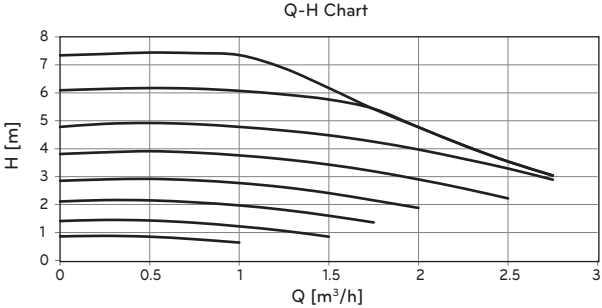

GRUNDFOS Water Pump : UPML GEO 20 – 105 CHBL

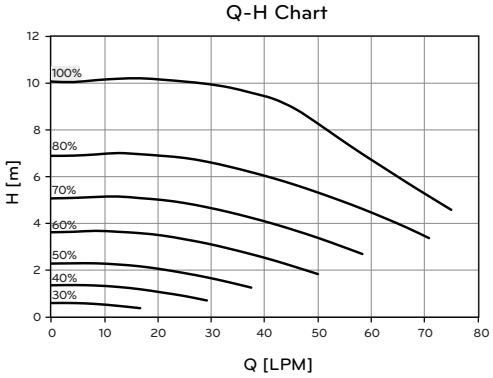

OH SUNG Water Pump : ODM-061P

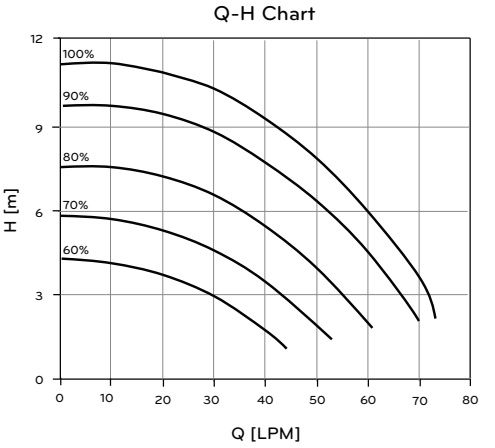

Performance test based on standard ISO 9906 with pre-pressure 2.0 bar and liquid temperature 20 °C.

⚠ WARNING

If outdoor units are installed in parallel, the rated flow rate will be multiplied, while the Serviceable head remains more or less the same. If the total pressure drop is higher than what the pumps can cover, the flow through one or more units will collapse and error CH14 will appear. The cross-section of the pipes between outdoor units and buffer tank must be increased , so that the given flow rates (see table) can be met.
Furthermore, a "reverse return piping" must be applied to balance the flow rates among the units.

Example: If 4x HM123HF with GRUNDFOS pumps are installed, the system pressure drop at a flow rate of 8.4 m^3/h must still not exceed a serviceable head of about 9.0 m water column.

Water Quality

Water quality should be complied with EN 98/83 EC Directives.
Detailed water quality condition can be found in EN 98/83 EC Directives.

⚠ CAUTION

- If the product is installed at existing hydraulic water loop, it is important to clean hydraulic pipes to remove sludge and scale.
- Installing sludge strainer in the water loop is very important to prevent performance degrade.
- Chemical treatment to prevent rust should be performed by installer.
- It is strongly recommended to install an additional filter on the heating water circuit. Especially to remove metallic particles from the heating piping, it is advised to use a magnetic or cyclone filter, which can remove small particles. Small particles may damage the unit and will NOT be removed by the standard filter of the heat pump system.

Frost protection by antifreeze

In areas of the country where entering water temperatures drop below 0 °C, the water pipe must be protected by using an approved antifreeze solution. Consult your AWHP unit supplier for locally approved solutions in your area. Calculate the approximate volume of water in the system. (Except the AWHP unit.) And add six liters to this total volume to allow for the water contained in AWHP unit.

Antifreeze type	Antifreeze mixing ratio					
	0 °C	-5 °C	-10 °C	-15 °C	-20 °C	-25 °C
Ethylene glycol	0 %	12 %	20 %	30 %	-	-
Propylene glycol	0 %	17 %	25 %	33 %	-	-
Methanol	0 %	6 %	12 %	16 %	24 %	30 %

If you use frost protection function, change DIP switch setting and input the temperature condition in Installation mode of remote controller. Refer to ‘CONFIGURATION > DIP Switch Setting > DIP Switch Information > Option Switch 3’ and ‘INSTALLER SETTING > Antifreezing Temperature’.

⚠ CAUTION

- Use only one of the above antifreeze.
- If a antifreeze is used, pressure drop and capability degradation of the system can be occurred.
- If one of antifreezes is used, corrosion can be occurred. So please add corrosion inhibitor.
- Please check the concentration of the antifreeze periodically to keep same concentration.
- When the antifreeze is used (for installation or operation), take care to ensure that antifreeze must not be touched.
- Ensure to respect all laws and norms of your country about Anti-freeze usage.

Frost protection by antifreeze valve

About antifreeze valve

This is a valve to prevent freeze in winter. When no antifreeze is added to the water, you can use antifreeze valves at all lowest points of the field piping to drain the water from the system before it can freeze

To install antifreeze valve

To protect the field piping against freezing, install the following parts:

Antifreeze valve

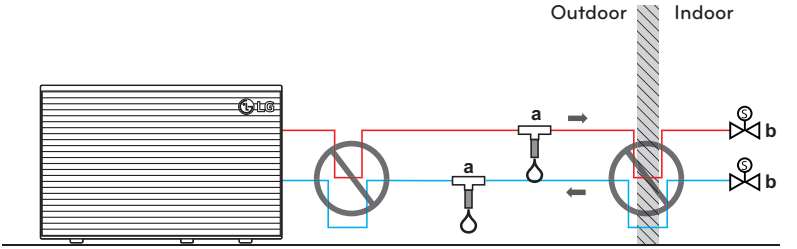

※ It can be different by model.

a Antifreeze valve (Optional – field supply)
b Normally closed valves (recommended – field supply)

Part	Description
a	Protection for the field piping. The antifreeze valve must be installed: • Vertically to allow water to flow out properly and free from obstructions. • At all lowest points of the field piping. • In the coldest part and away from heat sources.
b	Isolation of water inside the house when there is a power interruption. Normally closed valves (located indoors near the piping entry/exit points) can prevent that all water from indoor piping is drained when the antifreeze valve open. • **When there is a power interruption:** The normally closed valves close and isolate the water inside the house. If the antifreeze valve open, only the water outside the house is drained. • **In other circumstances** (example: when there is a pump failure): The normally closed valves remain open. If the antifreeze valve open, the water from inside the house is also drained.

NOTE

- Do not make any trap connections. If the shape of the connection pipe has the potential to create a trap effect, part of the pipe will not be able to drain and frost protection will no longer be guaranteed.
- Leave at least 15 cm clearance from the ground to prevent ice from blocking the water exit.
- Keep a distance of at least 10 cm between the antifreeze valves.
- The valve must be free of insulation for the system to work properly.
- When antifreeze valves are installed, do NOT select a minimum cooling setpoint lower than 7 °C. If lower, antifreeze valves can open during cooling operation.
- When installed outdoors, the antifreeze valve must be protected from rain, snow and direct sunlight.

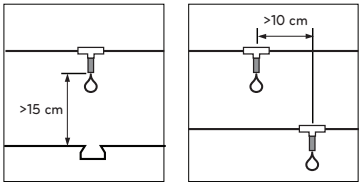

Water Volume and Expansion Vessel Pressure

Inside expansion vessel is included which is 8 liter capacity with 1 bar pre-pressure.

That means, according to the volume-pressure graph, total water volume of 230 liter is supported as default.

If total water volume is changed because of installation condition, the pre-pressure should be adjusted to secure proper operation.

If	Minimum water volume
The system contains a backup heater	20 L
The system does NOT contain a backup heater	80 L

- Pre-pressure is adjusted by the total water volume. If the indoor is located at the highest position of the water circuit, adjustment is not required.
- To adjust pre-pressure, use nitrogen gas by certificated installer.

ACCESSORIES INSTALLATION

This product can interface to various accessories to extend its functionality and to improve user convenience. In this chapter, specifications about supported 3rd party accessories and how to connect to this product is introduced.

For accessories supported by LG Electronics, please refer to installation manual of each accessories.

Accessories supported by LG Electronics

Item	Purpose	Model
Simple dry contact	To receive on & off external signal	PDRYCB000
Thermostat Dry contact	Dry Contact For Thermostat	PDRYCB320
Solar Thermal Kit	To operate with solar heating system	PHLLA
Buffer Tank	To generate and store hot water	SB006SAAN0: 60L SB010SAAN0: 100L
DHW Tank (Single Coil)	To generate and store hot water	SD020SASN0: 200L SD025SASN0: 250L SD030SASN0: 300L
DHW Tank (Double Coil)	To generate and store hot water	SD030SSSN0
DHW tank (single coil) with buffer	To generate and store hot water	ST030SASN0
Thermistor for Water Tank (DHW Tank)	To control hot water temperature of DHW tank	PHRSTA0
Meter Interface*	To measure production / consumption power	PENKTH000
Wall-mounted outdoor air temp. sensor	To control Automatically operation with more accurate outdoor temperature The basic outdoor temperature sensor is located in the back of ODU. It is especially affected by sunlight during the day.	PHATS0

* Only one device can be connected at a time.

Item	Purpose	Model
Cloud Gateway	To use Becon cloud	PWFMDB200
Wi-Fi Modem	To enable remote system operation from smartphone	PWFMDD200
Wi-Fi Extension Cable	To connect with Wi-Fi modem to the USB cable	PWYREW000
Thermistor for 2nd Circuit	To interlock with 2nd circuit operation and control temperature of mixing circuit or to interlock with 3rd party electric backup heater and control its outlet temperature.	PRSTAT5K10
Extension wire	To extend the Remote controller wire by 10 m.	PZCWRC1
Thermostatic mixing valve	To blend hot water with cold water for ensuring constant, safe shower and bath outlet temp.	OSHA-MV OSHA-MV1

* Only one device can be connected at a time.

⚠ CAUTION

- Install the drain pan when cooling.
- If not installed, water may form.
- Please refer to separate installation manual when installing drain pan.

Accessories supported by 3rd party Companies

Item	Purpose	Specification
Solar Heating System	To generate auxiliary heating energy for water tank	• Solar collector • Solar pump • Solar Thermal Sensor : PT1000
Thermostat	To control by room air temperature	Heating-Only type (230 V AC) Cooling/Heating type (230 V AC with Mode selection switch)
Mix Kit	To use 2nd Circuit	• Mixing valve • Mix pump
3rd Party Boiler	To use auxiliary boiler.	
3rd Party Controller*	To connect external controller using modbus protocol	Modbus RTU, 9600 bps, Stopbit 1, Parity none
3way valve and actuator	(A) : To control water flow for hot water heating or floor heating / To control water flow when installing 3rd party boiler (B) : To control close/open mode of solar circuit	3 wire, SPDT (Single Pole Double Throw) type, 230 V AC
2way valve and actuator	To block underfloor heating coil from cooling water	2 wire,NO(Normal Open) or NC(Normal Closed) type, 230 V AC
External Pump	To control the water flow at the rear of the buffer tank	
Smart Grid	To control operation mode depending on input signal from provider	2 x 230VAC
3rd Party ESS*	To control the operation mode according to the energy storage state	Modbus RTU
Antifreeze valve	To protect the pipes against freezing	
DHW Recirculation Pump	To control the water flow of DHW recirculation pump	
3rd party DHW boost heater	To reach DHW tank higher temperature	
3rd Party Backup heater	To supplement insufficient capacity	

* Only one device can be connected at a time.

Before Installation

⚠ WARNING

Followings should be kept before installation

- Main power must be turned off during installing accessories.
- 3rd party accessories should be comply with supported specification.
- Proper tools should be chosen for installation.
- Never do installation with wet hands.

Thermostat

Thermostat is generally used to control the product by air temperature. When thermostat is connected to the product, the product operation is controlled by the thermostat.

Installation condition

⚠ CAUTION

- USE 220-240 V~ Thermostat
- Some electro-mechanical type thermostat has internal delay time to protect compressor. In that case, mode change can takes time more than user's expectation. Please read thermostat manual carefully if the unit does not response quickly.
- Setting temperature range by thermostat can be different with that of the unit. The heating or cooling set temperature should be chosen within the setting temperature range of the unit.
- It is highly recommended that the thermostat should be installed where space heating is mainly applied.

Following location should be avoid to secure proper operation :

- Height from floor is approximately 1.5 m.
- Thermostat can not be located where the area may be hidden when door is open.
- Thermostat can not be located where external thermal influence may be applied. (such as above heating radiator or open window)

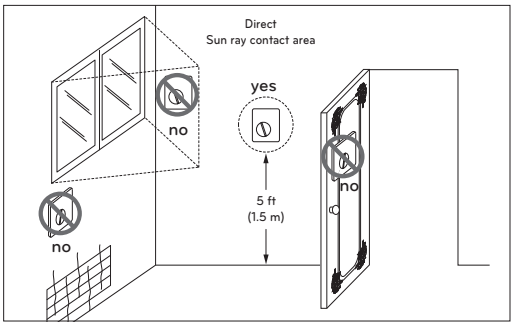

Thermostat

General Information

The Heat Pump supports following thermostats.

Type	Power	Operating Mode	Supported
Mechanical (1)	230 V~	Heating Only (3)	Yes
		Heating / Cooling (4)	
		Heating / Cooling / DHW Heating (5)	
Electrical (2)	230 V~	Heating Only (3)	Yes
		Heating / Cooling (4)	
		Heating / Cooling / DHW Heating (5)	

(1) There is no electric circuit inside the thermostat and electric power supply to the thermostat is not required.

(2) Electric circuit such as display, LED, buzzer, etc is included in the thermostat and electric power supply is required.

(3) Thermostat generates "Heating ON or Heating OFF" signal according to user"s heating target temperature.

(4) Thermostat generates both "Heating ON or Heating OFF" and "Cooling ON or Cooling OFF" signal according to user"s heating and cooling target temperature.

(5) Thermostat generates "Heating ON or Heating OFF", "Cooling ON or Cooling OFF", "DHW Heating ON or DHW Heating OFF" signal according to user's heating, cooling and DHW heating target temperature.

⚠ CAUTION

Choosing heating / cooling thermostat

- Heating / cooling thermostat must have "Mode Selection" feature to distinguish operation mode.
- Heating / cooling thermostat must be able to assign heating target temperature and cooling target temperature differently.
- If above conditions are not kept, the unit can not operation properly.
- Heating / cooling thermostat must send cooling or heating signal immediately when temperature condition is satisfied. No delay time while sending cooling or heating signal is permitted.

How to wire Heating / Cooling / DHW Heating thermostat

Follow below procedures Step 1 ~ Step 3.

Step 1. Uncover front cover of the unit and open the control box.

Step 2. Identify the power specification of the thermostat. If it is 220-240 V~, go to Step 3.

Step 3. Find terminal block and connect wire as below.

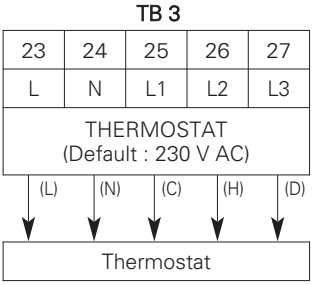

(L) : Live signal from PCB to thermostat
(N) : Neutral signal from PCB to thermostat
(C) : Cooling signal from thermostat to PCB
(H) : Heating signal from thermostat to PCB
(D) : DHW Heating signal from thermostat to PCB

⚠ WARNING

Mechanical type thermostat.
Do not connect wire (N) as mechanical type thermostat does not require electric power supply.

⚠ CAUTION

Do not connect external electric loads.
Wire (L) and (N) should be used only for operation electric type thermostat.
Never connect external electric loads such as valves, fan coil units, etc.
If connected, Main PCB (Heater) can be seriously damaged.

Final check

DIP switch setting :

- Set DIP switch No. 8 to 'ON'. Otherwise, the unit can not recognize the thermostat.

Remote Controller :

- 'Thermostat' text is displayed on the remote controller.
- Only the water temperature setting is available and the other button input is prohibited.
- In case of Heating / Cooling / DHW Heating thermostat, select 'Heat&Cool / DHW' as the Thermostat Control Type in the remote controller installer settings.
- The product operates according to Thermo On / Off conditions of the thermostat and remote controller.

Thermo On / Off Condition		Product
Thermostat	Remote Controller	
Thermo Off	Thermo Off	Thermo Off
Thermo Off	Thermo On	Thermo Off
Thermo On	Thermo Off	Thermo Off
Thermo On	Thermo On	Thermo On

2nd Circuit

The 2nd circuit is a function that can separately control the circuit1 requiring high temperature and the circuit 2 requiring medium temperature, you need to prepare a separate Mix Kit.
The mix kit must be installed in the circuit 2.

[Install Guide Mixing circuit Heating]

Circuit 2 / Circuit 1	Floor (35°C)	Convector (FCU, 45 °C)	Radiator (45 °C)	Radiator (55 °C)
Floor (35 °C)	×	×	×	×
Convector (FCU, 45 °C)	○	×	×	×
Radiator (45 °C)	○	○	×	×
Radiator (55 °C)	○	○	○	×

[Install Guide Mixing circuit Cooling]

Circuit 2 / Circuit 1	Floor (18 °C)	Convector (FCU, 5 °C)
Floor (18 °C)	×	×
Convector (FCU, 5 °C)	○	×

※ Heating circuits that are not designed for carrying cooling water must be blocked by the 2-way-valve.

NOTE

Circuit 1 = Direct circuit : Zone where the water temperature is highest when heating
Circuit 2 = Mixing circuit : The other zone

How to Wire Mixing Kit

Follow below procedures Step 1 ~ Step 3.

Step 1. Uncover front cover of the unit.

Step 2. Find terminal block and connect wire as below

TB 1

7	8	9	10	11
L	N	L1	L2	N
MIX PUMP		MIXING VALVE		

(L) (N) (L1) (L2) (N1)

MIX PUMP	MIXING VALVE

(L) : Live signal from PCB to mix pump

(N) : Neutral signal from PCB to mix pump

(L1) : Live signal (for Normal* Closed type) from PCB to mixing valve

(L2) : Live signal (for Normal Open type) from PCB to mixing valve

(N1) : Neutral signal from PCB to mixing valve

*Closed = NOT Mixed

Step3. Insert the temperature sensor to 'CN_MIX_OUT' (Brown) of the main PCB as shown below. The sensor should be mounted correctly to discharge pipe of mix pump as shown below.

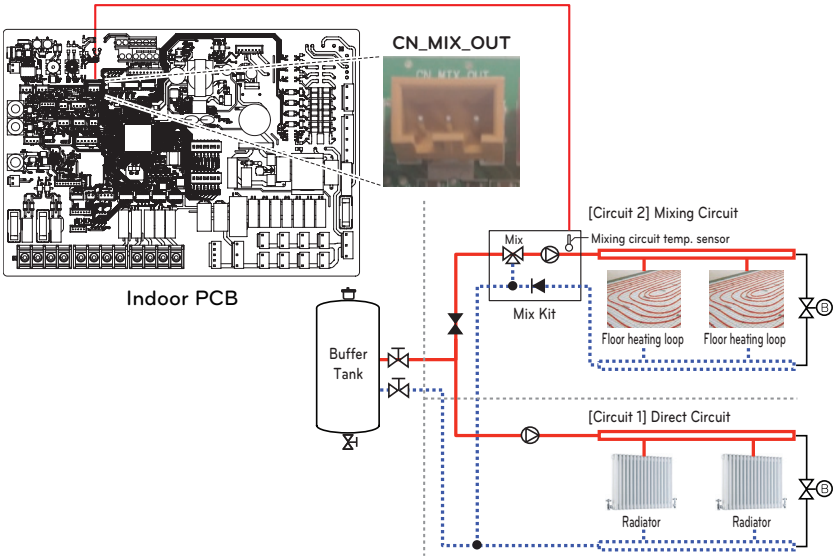

NOTE

- The location of the external pump may vary depending on the installer settings.
- Temperature sensor specification:
  LG-accessory PRSTAT5K10 at 25 °C : 5 kΩ
  Minimum operating temperature range : -30 °C~100 °C

[Thermistor for Mixing circuit]



Sensor



Sensor Holder



Sensor Connector

Follow below procedures step 1 ~ step 4.

Step 1. Install sensor connector to discharge pipe of mix pump.
(Welding must be performed to connect the sensor connector to the pipe)

Step 2. Check if the power of the unit is turned off.

Step 3. Fasten the sensor connector to the sensor holder as shown in the figure below.

Step 4. Insert harness into PCB(CN_MIX_OUT) fully and fix the thermal sensor into tube connector as shown below.

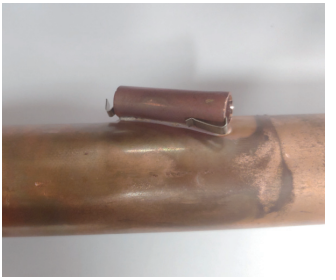

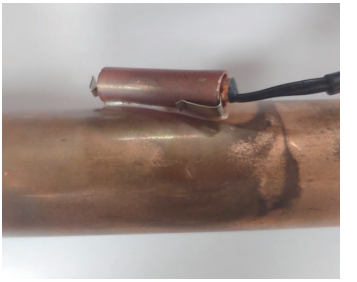

3rd Party Backup heater

The product can be used by connecting an Auxiliary Backup heater. You can control the Backup heater automatically and manually by comparing the water out temperature of Backup heater and the set temperature.

How to install 3rd party Backup heater


Sensor


Sensor Holder


Sensor Connector

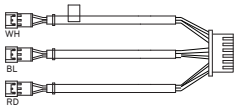

Middle Link Harness

Follow below procedures Step 1 ~ 5.

Step 1. Install sensor connector to outlet pipe of Backup heater.
(Welding must be performed to connect the sensor connector to the pipe)

Step 2. Check if the power of the unit is turned off.

Step 3. Fasten the sensor connector to the sensor holder as shown in the figure below.

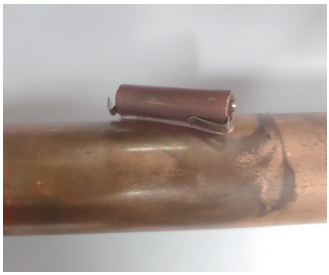

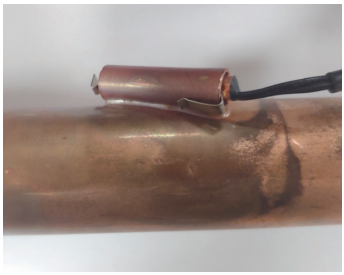

Step 4. Insert connector of the 3rd party backup heater temperature sensor to connector(White) of the middle link harness as shown below.

※ The middle link harness is inserted into PCB(CN_TH3).

3rd party backup heater temperature sensor

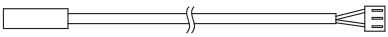

Middle Link Harness

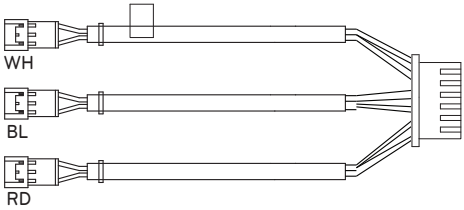

Step 5. Connect Power cable to the terminal block 'TB_HEATER_CONTACT' using the Magnetic Contactor.

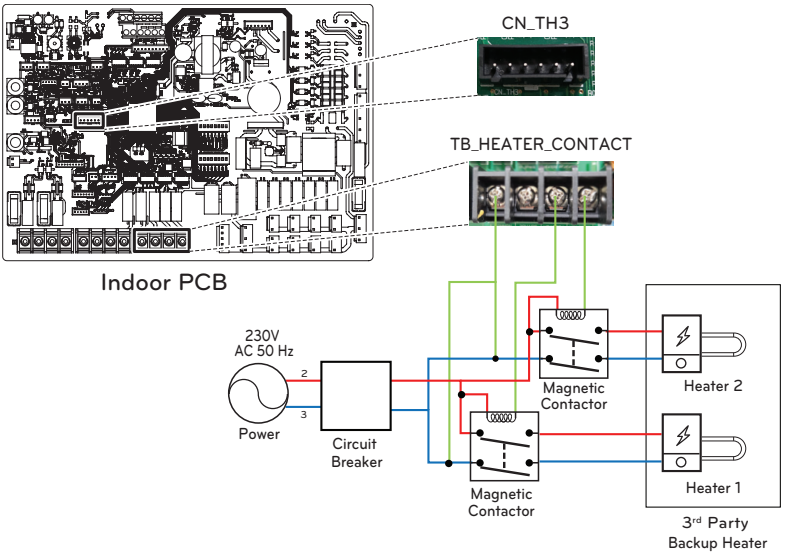

Item	Phase	Function	
3rd party Backup heater	1Ø	2 step	1 step (Heater 1 or Heater 2) 2 step (Heater 1 and Heater 2)
	3Ø	2 step	1 step (Heater 1 or Heater 2) 2 step (Heater 1 and Heater 2)

※ Select a circuit breaker and power cable suitable for 3rd party backup heater capacity.

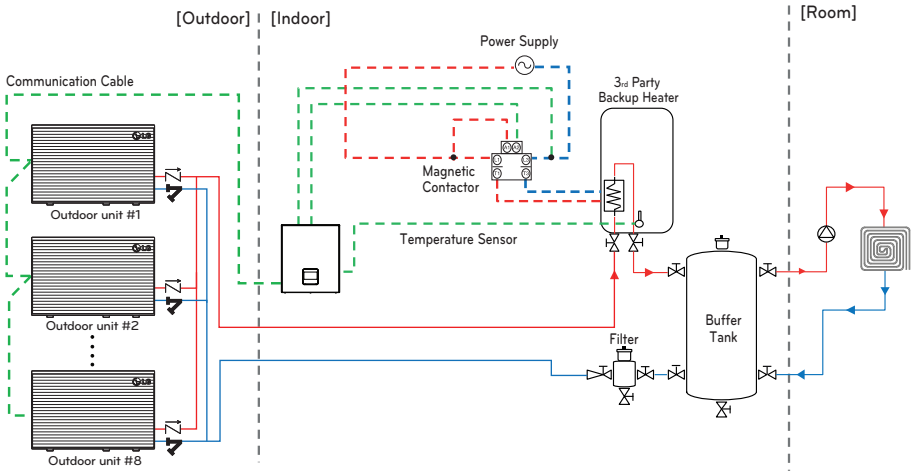

External Pump	Thermostatic Valve	Strainer
Safety Valve	2Way Valve (Manual)	Check Valve
2Way Valve (Signal)	Air vent	Floor Heating

⚠ CAUTION

- Accessory Heater sensor must be connected for use.
- Install the accessory heater sensor so that it can sense the water outlet temperature of the backup heater. If not, the product may malfunction.
- When connecting to the heater, please refer to the control method below and connect with safety.

3rd Party Boiler

The product can be used by connecting an Auxiliary boiler. 3rd party boiler can be enabled/disabled by manually via remote controller or automatically itself by means of comparing the outside air temperature and the pre-set temperature. Only Bivalent-alternative operation is possible. While boiler is enabled, it must operate by its own controls.

How to wire 3rd party boiler

Follow below procedures step 1 ~ step 3.

Step 1. Check if the power of the unit is turned off.

Step 2. Disassemble front panels and Distinguish terminal block in Indoor PCB.

Step 3. Connect Power cable to terminal block (TB_BOILER) fully.

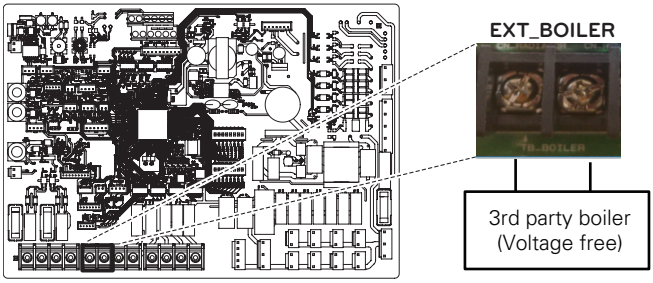

Indoor PCB

3rd Party Controller

The product can also be linked to 3rd party controller using Modbus RTU. Various datapoints and setting options are available through Modbus protocol. Contact your authorized dealer for more information.

How to wire 3rd party controller

Follow below procedures step 1 ~ step 4.

Step 1. Check if the power of the unit is turned off.

Step 2. Disassemble front panels and distinguish control box(Indoor) of the unit.

Step 3. Check if the harness(White) is inserted fully to the indoor unit PCB (CN_MODBUS).

Step 4. Connect the 3rd party controller to terminal block 2(21/22) completely.

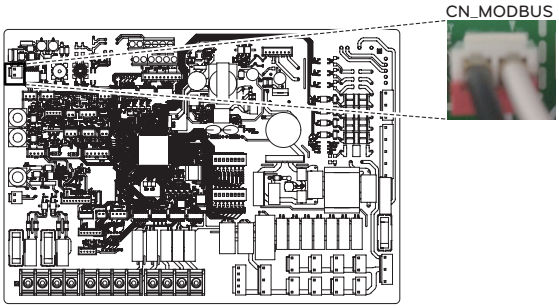

Indoor PCB

NOTE

- If CN_MODBUS port is used to interlink with LG metering module, a 3rd-party controller cannot be connected at the same time.

Meter Interface

This accessory (PENKTH000) can be used to connect 3rd-party wattmeter (max. 3) using pulse input or Modbus and one heatmeter using pulse input.

The consumed electric power and/or produced thermal energy is displayed on the remote controller.

How to install Meter Interface

[Parts of Meter interface]

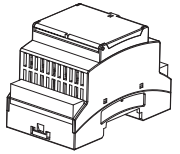

Meter interface body

Follow below procedures step 1 ~ step 4.

Step 1. Check if the power of the unit is turned off.

Step 2. Disassemble front panels and Distinguish control box(Indoor) of the unit.

Step 3. Check if the harness(White) is inserted fully to the indoor unit PCB (CN_MODBUS).

Step 4. Connect the external pump to terminal block 2(21/22).

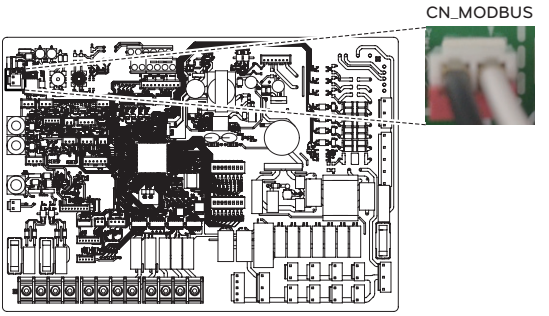

Indoor PCB

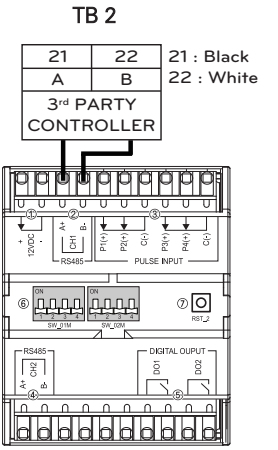

Meter interface

NOTE

- If CN_MODBUS port is used to interlink with 3rd-party controller, the metering module cannot be connected at the same time.
- Refer to manual of PENKTH000 for more information.

Cloud Gateway

The product can communicate and control through the cloud gateway. (PWFMDB200)
The following functions can be controlled in the central control linked state (Operation/Stop, Desired temperature, Hot water operation / stop, Warm water temperature, Full lock, Etc)

How to Install Cloud Gateway

To use cloud gateway, you need to establish an environment for mutual communication between cloud gateway and the this product and register the corresponding devices through the functions of cloud gateway.
To use cloud gateway, it shall be installed in the following order.

Step 1. Installation environment inspection and device address setting
Before installing Cloud gateway, check the network for any interfacing devices and assign non overlapping addresses to the connected devices. Connect the gateway either by Ethernet-cable to the customer's internet or use wireless option.

Step 2. Connections
Connect Cascade control unit and cloud gateway through RS-485 cable.

Step 3. Access and Device Registration
To finish the installation, it is neccesary to register on LG's BECONcloud platform.
By using the "BECONcloud" app, a 'Site code' is generated and the gateway can be connected to the cloud.
Consult a qualified engineer/ technician for the installation of cloud gateway.
If you have any installation queries, contact the LG service center or LG Electronics.

DHW Tank

To establish DHW circuit, 3way valve and DHW sensor (PHRSTA0) is required.

Installation condition

Installing DHW tank following considerations :

- DHW tank should be located at the flat place.
- Water quality should be complied with EN 98/83 EC directives.
- As this water tank is sanitary water tank (indirect heat exchange), do not use anti water-freezing treatment like ethylene grycol.
- It is highly recommend to wash out inside of the DHW tank after installation. It ensures generating clean hot water.
- Near the DHW tank there should be water supply and water drain for easy access and maintenance.
- Set the maximum value of the temperature control device of DHW tank.
- Make sure that the 3way-valve can carry the high water flow rate.

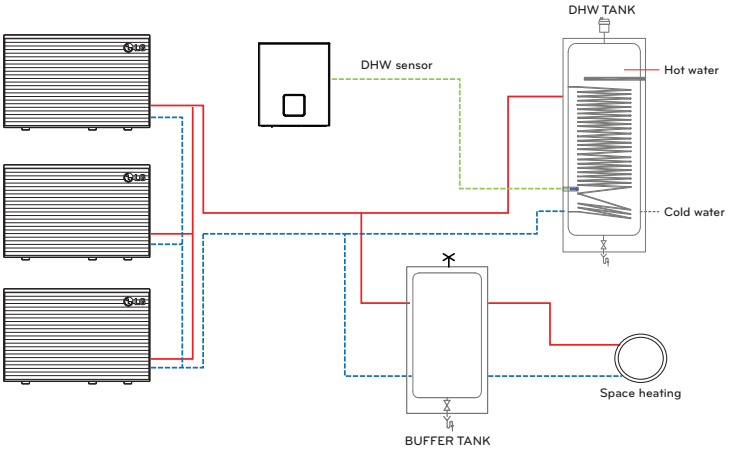

※ For detailed connection refer to manufacturer's manual of the DHW tank.

⚠ WARNING

The schematic does not include all necessary safety devices. For details refer to Hydronic schemes provides by local LG office.

General Information

Therma V™ supports following 3way valve.

Type	Power	Operating Mode	Supported
SPDT [1] 3-wire	230 V AC	Selecting Flow A[2] between Flow A and Flow B	Yes
		Selecting Flow B[3] between Flow A and Flow B	Yes

1) SPDT = Single Pole Double Throw. Three wires consist of Live1 (for selecting Flow A), Live 2 (for selecting Flow B), and Neutral (for common).

2) 'Flow A' means water flow from the unit to space heating circuit.

3) 'Flow B' means water flow from the unit to DHW tank.

Installing recirculation pump

A DHW recirculation pump can be connected to increase comfort, as warm water will immediately available when opening the tap.

- To limit the energy consumption, external time scheduler to determine when the recirculation pump should turn on and turn off is required.
- The operating duration time of the recirculation pump is calculated as follow :
  Duration time [minute] = k x V / R
  k : 1.2 ~ 1.5 is recommended. (If distance between pump and tank is far, then choose high number)
  V : Volume of DHW tank [liter]
  R : Water flow rate of pump [liter per minute], which is determined by pump performance curve.
- The pump operating start time should be prior to the DHW demand.

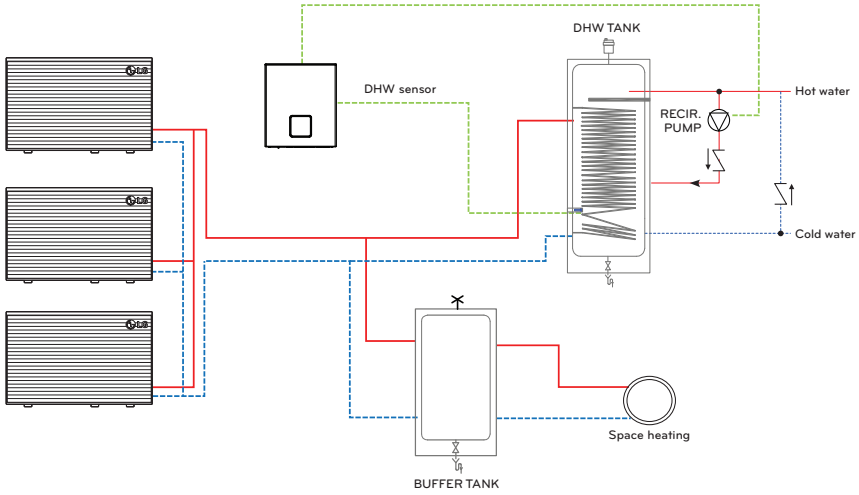

※ Water In / Water Out installation scene may vary depending on the model.

⚠ WARNING

The schematic does not include all necessary safety devices. For details refer to Hydronic schemes provides by local LG office.

How to wire recirculation pump

Follow below procedures step 1 ~ step 4.

Step 1. Check if the power of the unit is turned off.

Step 2. Disassemble front panels and distinguish control box(Indoor) of the unit.

Step 3. Check if the harness(Violet) is inserted fully to the indoor unit PCB (CN_PUMP_A15).

Step 4. Connect the DHW recirculation pump to terminal block 1(3/4).

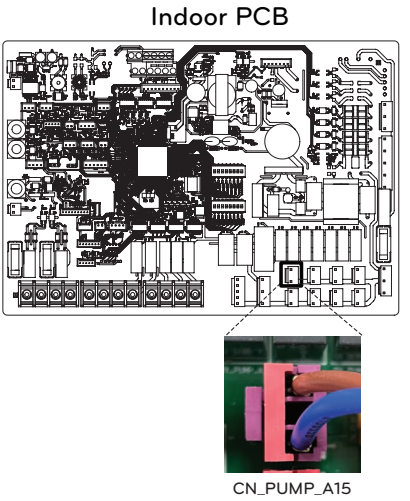

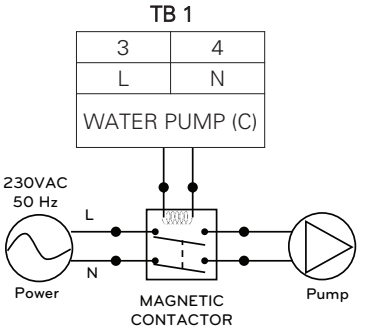

⚠ CAUTION

When connecting a pump of 1.05A or higher, its output must be used as a signal line only.

How to install 3rd party DHW boost heater

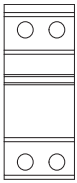

Circuit breaker

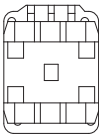

Magnetic switch



Sensor

Temperature sensor for DHW tank is used to control hot water temperature of DHW tank.

Follow below procedures step 1 ~ step 4.

Step 1. Insert DHW tank sensor to 'CN_TH4' (Red) of the Main PCB as shown below.

Step 2. Insert the sensor probe into the sensor pocket of the DHW tank.

Step 3. Connect the Magnetic switch with TB1. (Fig. 2)

Step 4. Connect the Circuit breaker with Magnetic switch. (Fig. 2)

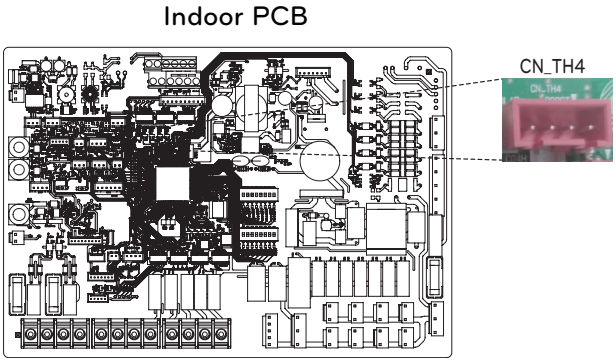

Fig. 1

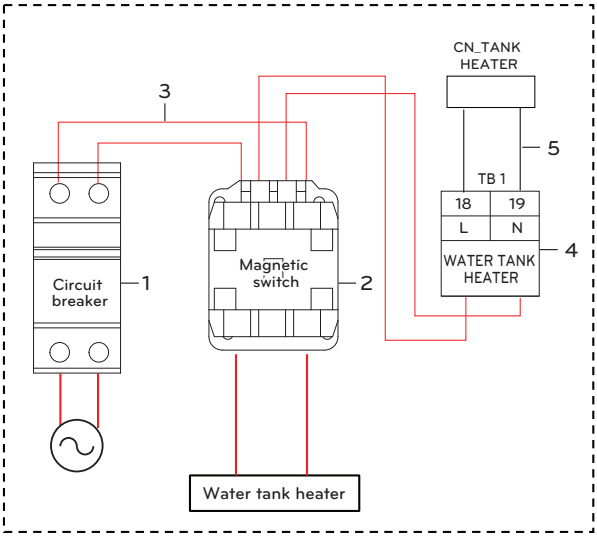

Fig. 2

No	Name	Note
1	Circuit breaker	Field-supplied item
2	Magnetic switch	Field-supplied item
3	Wire	Field-supplied item
4	Terminal block	Delivered item
5	Multi harness	Delivered item

NOTE

- Select a circuit breaker and power cable suitable for 3rd party DHW boost heater capacity.

Adjusting thermostat temperature

- To guarantee proper operation, it is recommended to set temperature of thermostat to maximum temperature.

Solar Thermal Kit

This product can be used by connecting the solar thermal kit in the field. It can be utilized hot water heated by solar thermal system. End-user must be install solar thermal kit accessory(PHLLA) provided by LG.

How to Install Solar Thermal Kit

[Parts of Solar Thermal Kit]



Sensor Holder

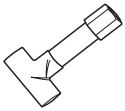

Tube Connector



Solar Thermal Sensor

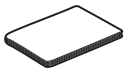

Installation Manual

Follow below procedures step 1 ~ step 4.

Step 1. Check if the power of the unit is turned off.

Step 2. Disassemble front panels and distinguish control box(Indoor) of the unit.

Step 3. Install 3rd-party PT1000 sensor at outlet of Solar thermal collector. Tube connector and sensor holder might be used if necessary. Connect the sensor-wire at port CN_SOLAR.

Step 4. Install tank sensors provided with the kit at top (WATER TANK SENSOR) and bottom (SOLAR PIPE SENSOR) and insert the connector at port CN_TH4 on IDU-PCB.

NOTE

- If single DHW-sensor is already connected at port CN_TH4, disconnect first, before connecting the double-sensor.

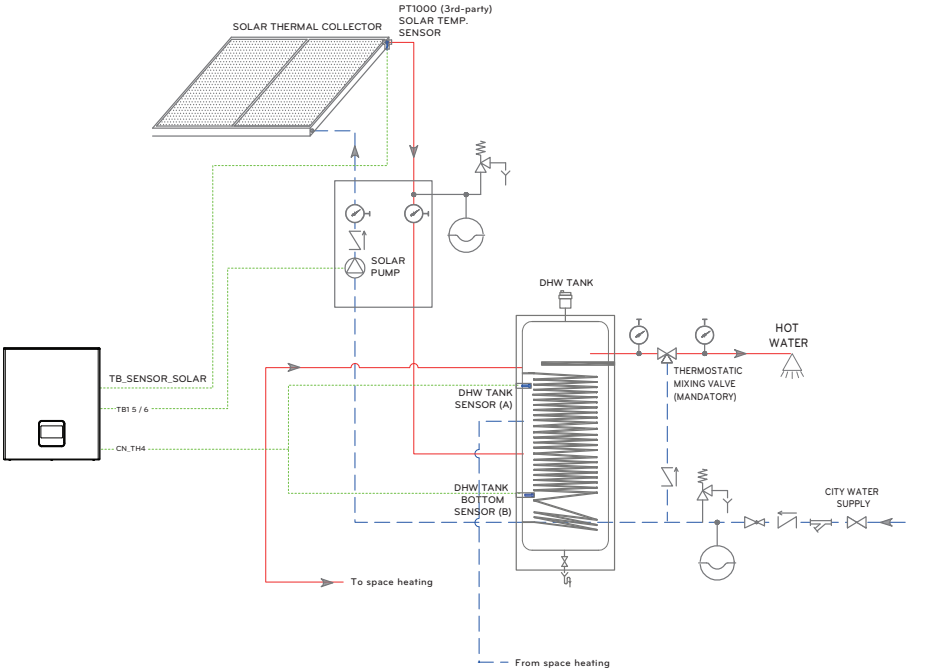

* Water In / Water Out installation scene may vary depending on the model.

Insert sensor until the cable tie as shown below.



⚠ CAUTION

Sensor mounting

Insert sensor into sensor socket and bolt it tightly.

Dry Contact

Dry Contact is a solution for automatic control of HVAC system at the owner's best. In simple words, it's a switch which can be used to turn the unit On/Off after getting the signal from external sources.

How to install dry contact

[Parts of Dry contact]



Dry Contact body



Cable(for connecting with IDU)

Follow below procedures step 1 ~ step 4.

Step 1. Check if the power of the unit is turned off.

Step 2. Disassemble front panels and distinguish terminal block in Indoor PCB.

Step 3. Connect cable to the unit PCB(CN_CC) fully.

Step 4. Then, Insert harness to the dry contact PCB(CN_INDOOR) firmly as shown below.

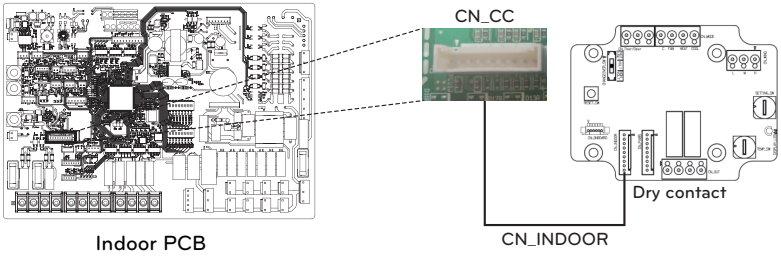

NOTE

- For more information about installing Dry Contact, Please refer installation manual provided with Dry Contact.
- For more settings about Dry Contact, Please refer to "Dry Contact Mode / CN_CC / CN_EXT" that installer setting part.

[Setting of Contact Signal Input]

• For input contact closure only(No power input)

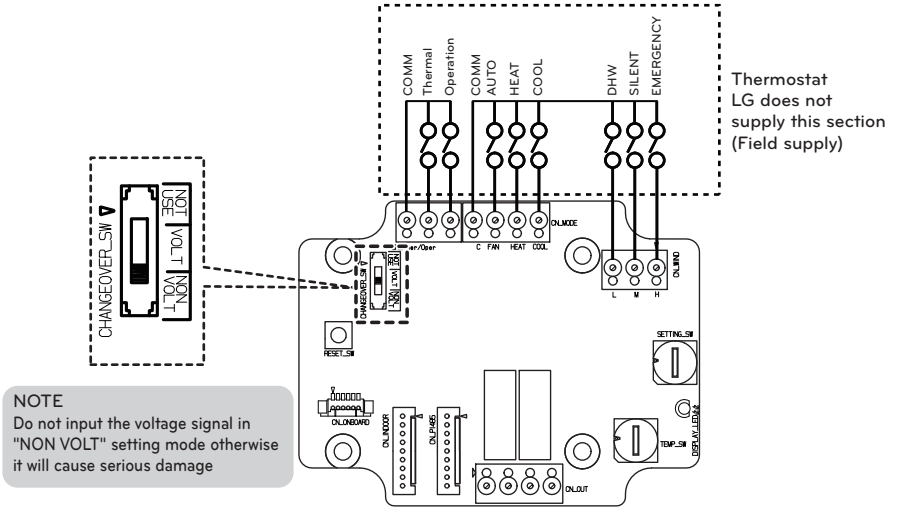

NOTE
Do not input the voltage signal in "NON VOLT" setting mode otherwise it will cause serious damage

• For input contact voltage : DC 12 V, 24 V~

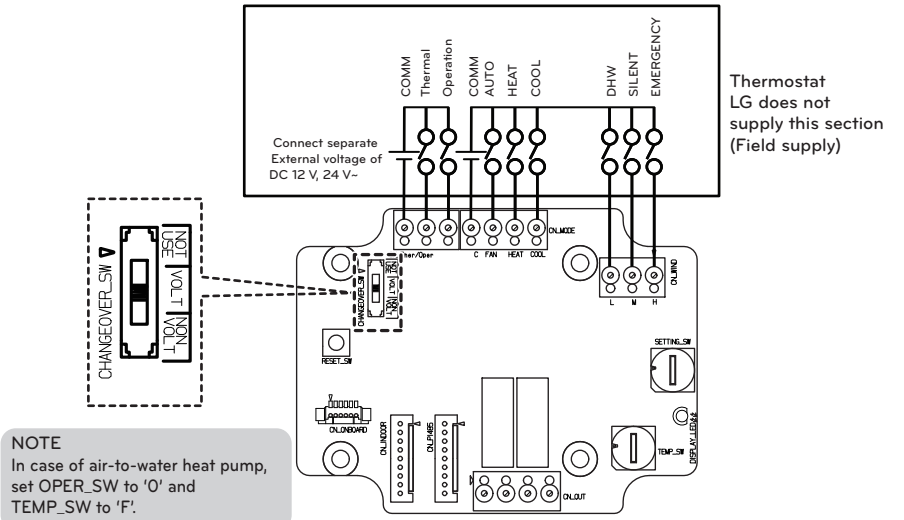

NOTE
In case of air-to-water heat pump, set OPER_SW to '0' and TEMP_SW to 'F'.

Setting_SW Setting

- Normal (0) : Possible to be controlled by the remote controller.
- Forced (1) : Not possible to be controlled by the remote controller.
- There is no OPER_SW setting that each input signal is disabled.

External Controller - Setting up programmable digital input operation

If you require to control depending on external digital input(ON/OFF), connect cable to indoor PCB(CN_EXT).

Follow below procedures step 1 ~ step 4.

Step 1. Check if the power of the unit is turned off.

Step 2. Disassemble front panels and distinguish control box(Indoor) of the unit

Step 3. Connect the external controller to PCB(CN_EXT) completely.

Step 4. Connect the cable and field installation part.

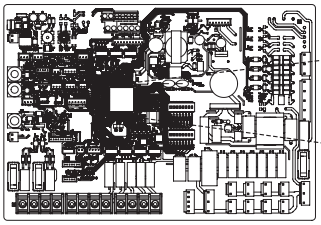

Indoor PCB

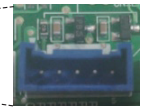

CN_EXT

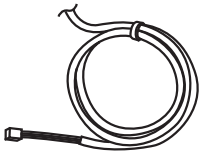

Adapter Cable

*Delivered part

Installation example #1

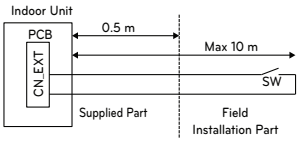

- SW : Single pole switch
  - Select a part with contacts for extremely low amperage
  - DC 5 V ~ 12 V is used at the contact point
  - Switch load is approximately 0.5 ~ 1 mA
- Control cable
  - Cable size : 22 to 26 AWG
  - Don't extend the cable more than 10 meters

Installation example #2

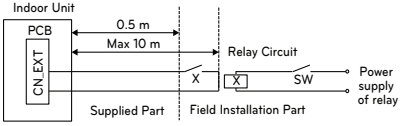

- X : Relay (a point of contact, fixed DC 0.5 ~ 1 mA)
- SW : Distance ON/OFF switch
- Control cable (Indoor unit to Relay Circuit)
  - Cable size : 22 to 26 AWG
  - Don't extend the cable more than 10 meters

Solar pump

Solar pump can be required to energize water flow when solar thermal system is installed.

How to wire solar pump

Follow below procedures step 1 ~ step 4.

Step 1. Check if the power of the unit is turned off.

Step 2. Disassemble front panels and distinguish control box(Indoor) of the unit.

Step 3. Check if the harness(Black) is inserted fully to the indoor unit PCB (CN_PUMP_A4).

Step 4. Connect the external pump to terminal block 1(5/6).

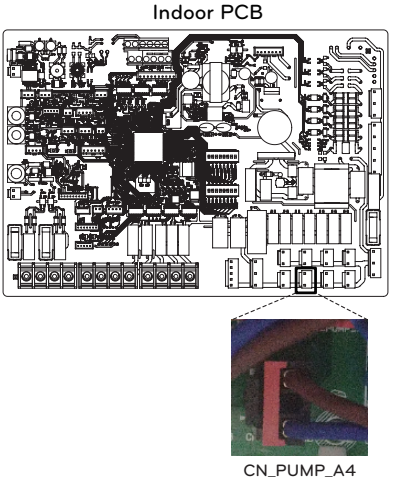

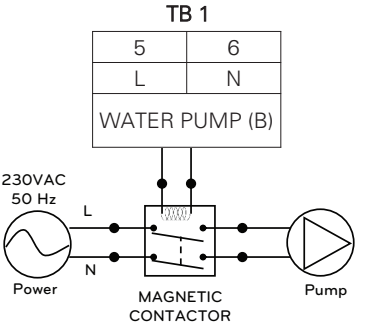

⚠ CAUTION

When connecting a pump of 1.05A or higher, its output must be used as a signal line only.

NOTE

PWM-type pump is not supported by this controller.

External pump

External pump (3rd-party) can be utilized if internal pump cannot overcome system pressure losses; if secondary pump is needed (in case parallel buffer tank) or - if two heating circuits are needed - as circuit pump to feed the radiator circuit.

How to wire external pump

Follow below procedures step 1 ~ step 3.

Step 1. Check if the power of the unit is turned off.

Step 2. Disassemble front panels and distinguish terminal block in Indoor PCB.

Step 3. Connect signal cable to terminal block fully.

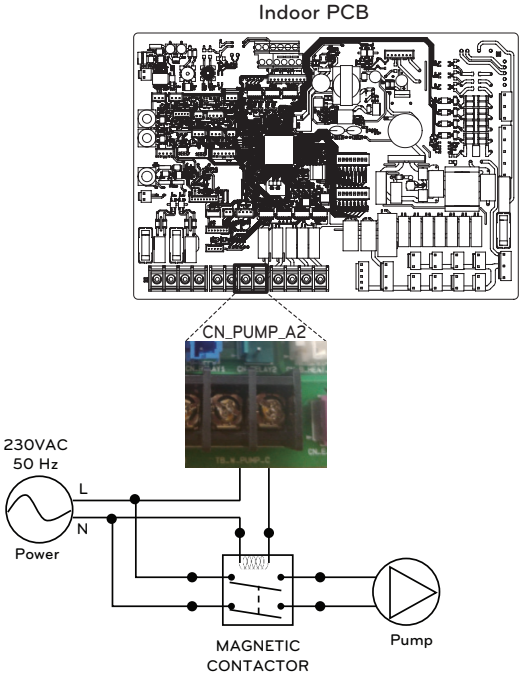

Wi-Fi Modem

Wi-fi modem enables remote system operation from smartphone. Available functions include selection of on/off, operation mode, DHW heating, temperature setup and weekly scheduling etc. For detailed instructions, refer to the manual included in the accessories.

How to wire Wi-Fi Modem

[Parts of Wi-Fi modem]



Wi-Fi modem body

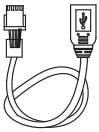

USB Cable

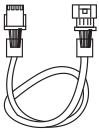

Extension Cable

※ Extension cable for Wi-Fi Modem : PWYREW000 (Sold Separately)

Follow below procedures step 1 ~ step 5.

Step 1. Check if the power of the unit is turned off.

Step 2. Disassemble front panels and distinguish control box(Indoor) of the unit.

Step 3. Connect the USB cable to the indoor unit PCB (CN_WIFI ; Blue) until it clicks into place.

Step 4. Connect the Wi-Fi modem to the USB cable fully.

Step 5. Refer to the image below to install the Wi-Fi modem in the marked position.

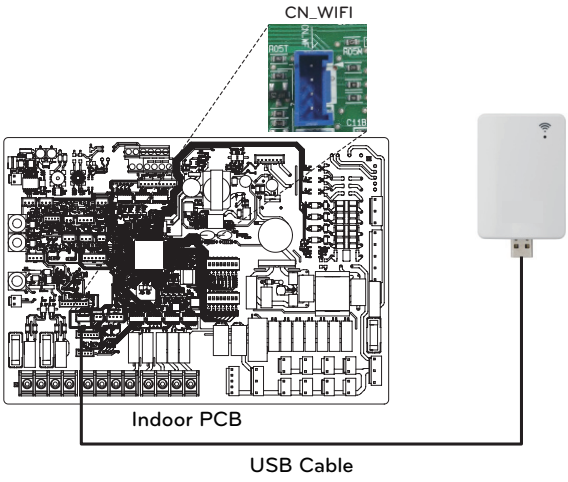

Energy State

This product provides energy states that enable customers to use as much as possible of their own renewable energy. It can shift setpoints depending on input signal from Energy Storage System (ESS) or from any other third-party device using Modbus RTU or Digital 230V inputs.

Available Energy States

There are 8 energy states available. 4 fixed and 4 customizable - each with the possibility to enhance self-consumption of renewable energy.

Energy state	Command	Battery State of charge	Operation (standard setting)					
			Heating		Cooling		Domestic Hot Water	
			Setting	Range	Setting	Range	Setting	Range
1	Operation Off (Utility lock)	Low	Forced internal operation off	Fixed	Forced internal operation off	Fixed	Forced internal operation off	Fixed
2	Normal Operation	Normal	Maintain operation status	Fixed	Maintain operation status	Fixed	Maintain operation status	Fixed
3	Operation On Recommend	High	Increase 2 °C from target temperature	Fixed	Maintain operation Status	Fixed	Increase 5 °C from target temperature	Fixed
4	Operation On Recommend	Very High	Maintain operation status	Fixed	Maintain operation status	Fixed	DHW Target 80 °C	Fixed
5	Operation On Commend	Very High	Increase from target temperature	0/+30 (Default : +5)	Decrease from target temperature	0/-30 (Default : -5)	Increase from target temperature	0/+50 (Default : +30)
6	Operation On Recommend	High	Increase from target temperature	0/+30 (Default : +2)	Decrease from target temperature	0/-30 (Default : -2)	Increase from target temperature	0/+50 (Default : +10)
7	Operation Save	Low	Decrease from target temperature	0/-30 (Default : -2)	Increase from target temperature	0/+30 (Default : +2)	Decrease from Target Temperature	0/-50 (Default : 0)
8	Operation Super Save	Very Low	Decrease from target temperature	0/-30 (Default : -5)	Increase from target temperature	0/+30 (Default : +5)	Decrease from Target Temperature	0/-50 (Default : 0)

Digital Input for energy saving (ESS, Smart Grid)

This product provides two digital inputs (TB_SG:ES1/ES2) that can be used to switch between energy states when not using Modbus RTU (CN-COM).

Available Energy States

There are 8 energy states available in total. Four different states can be triggered using the 230V-inputs – by default Energy states 1-4.

With the digital input assignment in the menu 'Energy state/Digital input assignment of the control panel, different Energy states can be selected for Signals 0:1 and 1:1.

0:0 is always linked with ES2 (Normal operation) and 1:0 is always linked with ES1 (Operation off/Utility lock).

How to set Digital input signal

Follow below procedures step 1 ~ step 3.

Step 1. Check if the power of the unit is turned off.

Step 2. Disassemble front panels and distinguish terminal block in Indoor PCB.

Step 3. Connect signal cable to terminal block in PCB (ES2, ES1) fully as shown below.

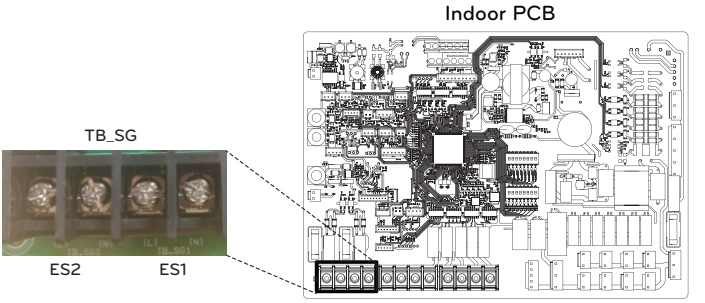

Energy state depending on input signal (ES1 / ES2)

Input Signal		Output state	
ES1	ES2	Default	Range
0	0	Energy state 2	fixed
1	0	Energy state 1	
0	1	Energy state 3	Energy state 3 ~ Energy state 8
1	1	Energy state 4	

2Way Valve

2way valve is required to control water flow while cooling operation. Role of 2way valve is to cut off water flow into under floor loop in cooling mode when fan coil unit is equipped for cooling operation.

General Information

Therma V™ supports following 2way valve.

Type	Power	Operating Mode	Supported
NO 2-wire [1]	230 V AC	Energize : Valve Closing	Yes
		De-Energize : Valve Opening	
NC 2-wire [2]	230 V AC	Energize : Valve Opening	Yes
		De-Energize : Valve Closing	

1) Normal Open type. When electric power is NOT supplied, the valve is open. (When electric power is supplied, the valve is closed.)

2) Normal Closed type. When electric power is NOT supplied, the valve is closed. (When electric power is supplied, the valve is open.)

How to Wire 2Way Valve

Follow below procedures Step 1 ~ Step 2.

Step 1. Uncover front cover of the unit.

Step 2. Find terminal block and connect wire as below.

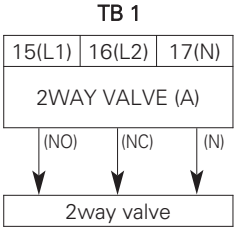

(NO) : Live signal (for Normal Open type) from PCB to 2way valve.

(NC) : Live signal (for Normal Closed type) from PCB to 2way valve.

(N) : Neutral signal from PCB to 2way valve.

⚠ CAUTION

Dew Condensation

- Wrong wiring can yield dew condensation on the floor. If radiator is connected at the under floor water loop, dew condensation can be occurred on the surface of the radiator.

⚠ WARNING

Wiring

- Normal Open type should be connected to wire (NO) and wire (N) for valve opening in cooling mode.
- Normal closed type should be connected to wire (NC) and wire (N) for valve closing in cooling mode.

Final Check

Flow direction :

- Water should not flow into under floor loop in cooling mode.
- To verify the flow direction, check temperature at the water inlet of the under floor loop.
- If correctly wired, this temperatures should not drop below 16 °C in cooling mode.

3Way Valve(A)

3Way Valve(A) is required to operate DHW water tank. Role of 3way valve is flow switching between space heating circuit and water tank heating loop.

General Information

Therma V™ supports following 3way valve.

Type	Power	Operating Mode	Supported
SPDT [1] 3-wire	220-240 V~	Selecting Flow A[2] between Flow A and Flow B	Yes
		Selecting Flow B[3] between Flow A and Flow B	Yes

1) SPDT = Single Pole Double Throw. Three wires consist of Live1 (for selecting Flow A), Live 2 (for selecting Flow B), and Neutral (for common).
2) Flow A means 'water flow from the unit to space heating circuit.
3) Flow B means 'water flow from the unit to DHW water tank.'

How to wire 3way valve(A)

Follow below procedures Step 1 ~ Step 2.
Step 1. Uncover front cover of the unit.
Step 2. Find terminal block and connect wire as below.

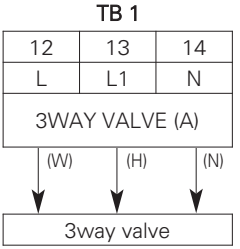

(W) : Live signal (Water tank heating) from PCB to 3way valve
(H) : Live signal (Space heating) from PCB to 3way valve
(N) : Neutral signal from PCB to 3way valve

⚠ WARNING

- 3way valve should select water tank loop when electric power is supplied to wire (W) and wire (N).
- 3way valve should select the heating circuit when electric power is supplied to wire (H) and wire (N).

NOTE

Operation time of flow control valve(e.g. 3way valve or 2way valve) should be less than 90 seconds.

Final check

No.	Check point	Description
1	Connection of Water Inlet/Outlet	- Check if the shut-off valves should be assembled with Water inlet and outlet pipe of the unit - Check the location of the water inlet/outlet water pipe
2	Hydraulic pressure	- Check the pressure of supplying water by using pressure gauge inside the unit (Monitoring screen). - Pressure of Supplying water should be Under 3.0 bar approximately
3	Water pump capacity	- To secure enough water flow rate, do not set water pump capacity as Minimum. - It can lead unexpected flow rate error CH14. (Refer to 'Water Piping and Water Circuit Connection')
4	Transmission line and power source wiring	- Check if Transmission line and power source wiring are separated from each other. - If it is not, electronic noise may occur from the power source.
5	The power cord specifications	- Check the power cord specifications (Refer to 'Communication cable')
6	3Way Valve	- Water should flow from Water outlet of the unit to sanitary tank Water inlet when sanitary tank heating is selected. - To verify the flow direction, Make sure that the water outlet temperature of the unit and water inlet temperature of sanitary Water tank are similar
7	2Way Valve	- Water should not flow into under floor loop in cooling mode. - To verify the flow direction, check temperature at the water inlet of the under floor loop. - If correctly wired, this temperatures should not drop below 16 °C in cooling mode.
8	Air Vent	- Air-vent must be located highest level of Water pipe system - It should be installed at the point which is easy to service. - It takes some times to remove air in the water system if air purge is not performed sufficiently it may occur CH14 error. (Refer to 'Water Charging') - Air vent in outdoor units must remain open.
9	Outdoor unit's zone & number setting	- Check proper wiring and polarity of communication wiring. - Check correct zone & number setting of outdoor units - Check that all DIP-switches are set correctly. DIP-switch No.6 in all outdoor units reset to "OFF" after installation.

⚠ WARNING

Do not use an automatic air-vent, as flammable refrigerant may leak into the water circuit and get released through an automatic valve into the building.

CONFIGURATION

As **Therma V™** is designed to satisfy various installation environment, it is important to set up system correctly. If not configured correctly, improper operation or degrade of performance can be expected.

DIP Switch Setting

⚠ CAUTION

Turn off electric power supply before setting DIP switch

- Whenever adjusting DIP switch, turn off electric power supply to avoid electric shock.

General Information

Indoor PCB

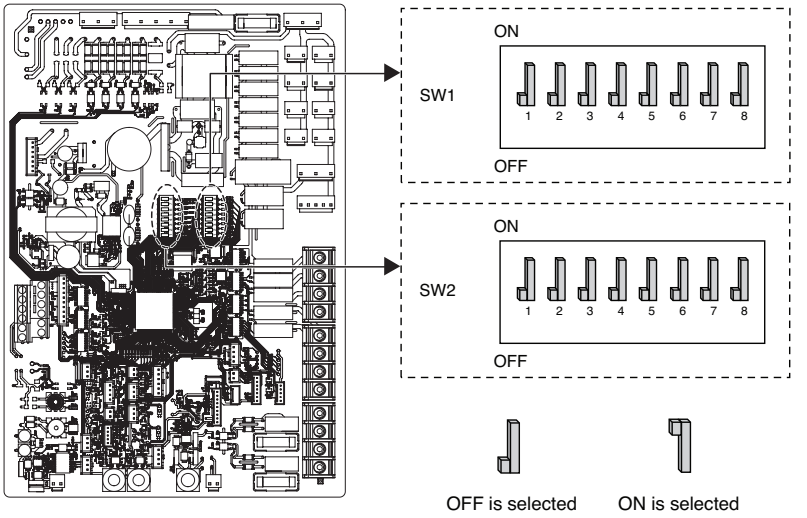

DIP Switch Information

Option Switch 1

Description	Setting		Default
MODBUS Communication Type	 1	As Master (LG extension modules)	 1
	 1	As Slave (3rd party controller)	
MODBUS Function	 2	Unified Open Protocol	 2
	 2	No function	
Antifreeze Agent	 8	Antifreeze agent is not used	 8
	 8	Antifreeze agent is used *	

* Possibility to allow colder water temperature by setting.
Bridge at CN_ANTI_SW must be dis-connected to enable setting.

⚠ WARNING

NEVER change setting if antifreeze agent (glycol) is not actually added.

Option Switch 2

Description	Setting		Default
Accessory installation information	 2 3	Heat pump is installed (Heating (Cooling) circuit only)	 2  3
	 2 3	Heat pump + DHW tank is installed	
	 2 3	Heat pump + DHW tank + Solar thermal system is installed	
Cycle	 4	Heating Only	 4
	 4	Heating & Cooling	
Selecting Backup heater capacity	 6 7	Electric heater is not used	 6  7
	 6 7	Half capacity is used	
	 6 7	Reserved	
	 6 7	Full capacity is used	
Thermostat installation information	 8	Thermostat is NOT installed	 8
	 8	Thermostat is installed	

Outdoor PCB

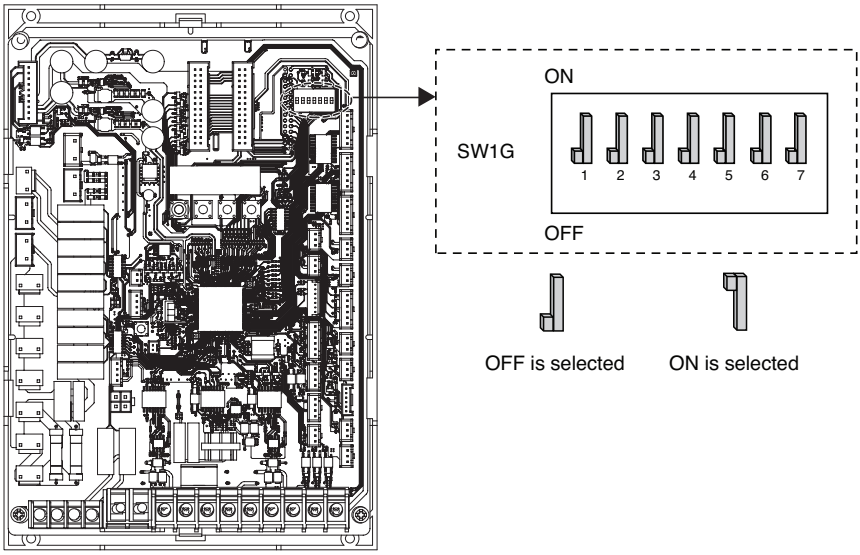

DIP Switch Information

[UB40, UB60 Series]

Description	Setting		Default
Low Noise Mode	2	Always Mode - Maintain low noise mode even if target temp. cannot be reached for long time.	 2
	2	ON/OFF Partial mode - Escape low noise mode if target temp. cannot be reached for long time.	
Peak Control	 3 4	Max Mode	 3  4
	 3 4	Peak Control Step 1 - To limit maximum current (Power saving)	
	 3 4	Peak Control Step 2 - To limit maximum current (Power saving)	
	 1 2 3	Peak Control Step 3 (3Ø Only) - To extend maximum frequency (Using hot gas defrosting)	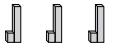 1 2 3
	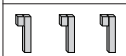 3 4 5	Peak Control Step 4 (3Ø Only) - To extend maximum frequency (NOT using hot gas defrosting)	 3 4 5
Hot Gas Defrostiong Mode	 4 5	Hot Gas Defrosting is active (At low inlet water temperature)	 4 5
	 4 5	Hot Gas Defrosting is inactive (At low inlet water temperature)	
Zone & Number Setting Mode	 6	Outdoor unit's Zone & Number Setting Mode is inactive	 6
	 6	Outdoor unit's Zone & Number Setting Mode is active	
Emergency Independent Operation Mode	 7	Outdoor unit's Emergency Independent Operation Mode is inactive	 7
	 7	Outdoor unit's Emergency Independent Operation Mode is active	

※ When setting the limited low noise mode, Mode can be exited to secure capacity after operating for a certain time.

※ In the site with external pump, it is recommended to disable the hot gas defrost mode.

※ Zone & Number Setting Mode is only used for cascade control unit.

[UB41, UA41 Series]

Description	Setting		Default
Low Noise Mode	 2	Always Mode - Maintain low noise mode even if target temp. cannot be reached for long time.	 2
	 2	ON/OFF Partial mode - Escape low noise mode if target temp. cannot be reached for long time.	
Peak Control	 3 4	Max Mode	 3  4
	 3 4	Peak Control Step 1 - To limit maximum current (Power saving)	
	 3 4	Peak Control Step 2 - To limit maximum current (Power saving)	

※ When setting the limited low noise mode, Mode can be exited to secure capacity after operating for a certain time.

※ In the site with external pump, it is recommended to disable the hot gas defrost mode.

※ Peak Control Step 3&4: Please contact LG Service for details.

NOTE

Input current value can be limited by DIP Switch operation.

Model Name			Peak Control Mode Running Current (A)	
Chassis	Phase (Ø)	Capacity (kW)	1 Step	2 Step
UB40 Series	1	7	-	15
		9	-	16
	3	7	7	5
		9	8	6
UB60 Series	1	12	-	20
		14	-	20
		16	-	20
	3	9	7	5
		12	7	5
		14	8	6
		16	9	7
UA41 Series	1	5	15	13
		7	18	16
		9	20	18
	3	7	10	9
		9	11	10
UB41 Series	1	12	24	21
		14	25	22
		16	26	23
	3	12	9	8
		14	10	9
		16	11	10

SERVICE SETTING

How to enter service setting

To enter the menu displayed at the bottom, you need to enter the service setting menu as follows.

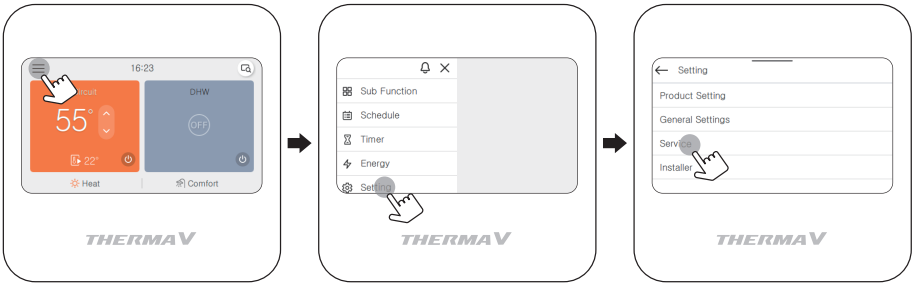

Service setting

- You can set the product service functions.
- Some functions may not be displayed/operated in some product types.

Menu	Description
Service contact	Check and input the service center phone number that you can call when there is service issue.
Model information	View product and capacity information
SW Version	Check the remote controller software version.
Open Source License	View the remote controller's open source license.
Software Update	Update the remote controller software version.

Service contact

Check and input the service center phone number that the user can call when there is service issue.

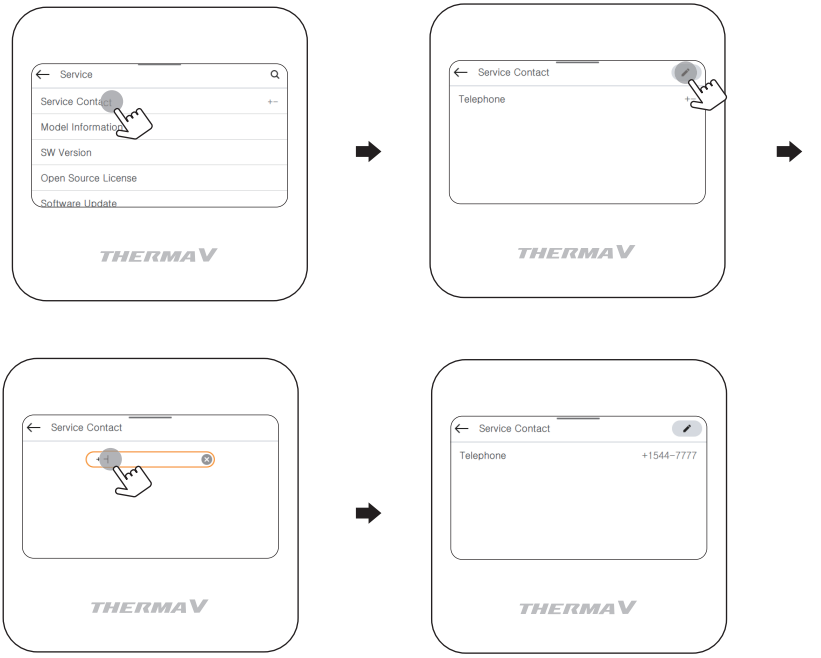

INSTALLER SETTING

How to enter installer setting

⚠ CAUTION

The installer setting mode is the mode to set the remote controller's detail function.
If the installer setting mode is incorrectly set, it may cause product failure, user's injury, or property damage. It must be set by the installation specialist with the installation license, and if it is installed or changed without installation license, all problems caused will be the responsibility of the installer, and may void the LG warranty.

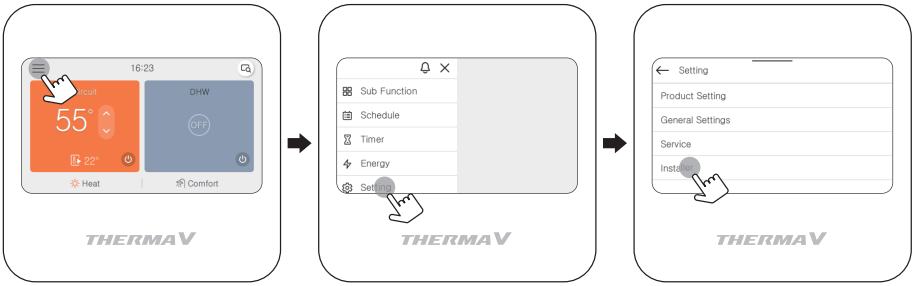

※ Installer setting password
Main screen ⟶ menu ⟶ setting ⟶ service ⟶ SW Version

Example) SW version : 1.00.1 a
In the above case, the password is 1001.

NOTE

Some categories of the installer setting menu may not be available depending on the product function or the menu name may be different.

Installer setting

- You can set the product user functions.
- Some functions may not be displayed/operated in some product types.

Menu hierarchy & Setting				Explanation	Detailed explanantion	Available Setting options (range)	Unit	Default
CONFIGURATION	Select Room Devices	RMC Linked To		Definition to which circuit this Remote controller is linked to. - **Circuit 1&2** : This RMC is used to control the whole heating system - **Circuit 1** : This RMC is used to control Circuit 1 (unmixed circuit) only - **Circuit 2** : This RMC is used to control Circuit 2 (mixed circuit) only	O	Circuit1 &2 / Circuit1 / Circuit2	-	Circuit 1&2
			Circuit 1	Digital Input		With this setting, a Digital input (Dry contact, 3rd party thermostat or external input) can be linked to Circuit 1. Consequently, the signal will be used as thermo-on/off command for Circuit 1 only.		CN-EXT / CN-THMO / CN-CC	-	CN-CC
			Circuit 2	Digital Input		With this setting a Digital input (Dry contact, 3rd party thermostat or external input) can be linked to Circuit 2. Consequently, the signal will be used as thermo-on/off command for Circuit 2 only.		CN-EXT / CN-THMO / CN-CC	-	CN-CC
	Mixing Circuit		Mixing Circuit		Additional mixing circuit is enabled using sensor CN- MIX-OUT and 3rd-party mixer. In case of 'Heating only', the Mixing valve is closed and the Mix pump is off during Cooling operation.		Not Use / Heat & Cool / Heat Only	-	Not use
			Valve Closing Time		Set operating time of 3rd-party mixer motor (Full open ⟶ Full close)		0 ~ 999	sec	240
	Backup Heater for DHW				Defines if Backup heater is used for re-heating the DHW in case of Emergency. To use this function the backup heater must be installed and configured by DIP switch! If the DHW boost heater inside of the tank is configured too, both heaters will run in parallel! In case of "Combination indoor unit" with integrated tank, always the Backup heater is supporting both - space heating and DHW heating!		Use / Not use	-	Not use

Menu hierarchy & Setting			Explanation	Detailed explanantion	Available Setting options (range)	Unit	Default
CONFIGURATION	External Pump		Setting if External pump is used and for what purpose. - **Use** : The external pump operates synchronously with the built-in pump inside the product. - **Heat & Cool** : The external pump operates synchronously with the built-in pump inside the product - except for DHW heating. - **Circuit 1** : The external pump is installed within Radiator circuit (Circuit 1) in case of two circuits.	O	Not use / Use / Heat&Cool / Circuit1	-	Not use
	Boiler Output		Setting whether 3rd-party boiler is connected to TB_EXT/EXT_BOILER and enabled below Bivalent point. - **Remark** : The boiler won't be controlled actively. Only it is released and must operate according its own controls. - **Heat & DHW** : The boiler is used for Space heating and DHW. - **Heating only** : The boiler is used for Space heating only. The heat pump is heating the DHW year-round.	O	Not use / Heat & DHW / Heating only	-	Not use
	DHW Boost Heater		If an electric boost heater is installed in the DHW tank, choose 'Installed'.		Installed / Not installed	-	Installed
	Select Outdoor Air Sensor		Definition which sensor is used to read the outdoor air temperature needed for Auto mode.	O	ODU air sensor / Wall- mounted air sensor	-	ODU air sensor
GENERAL	Forced Pump Operation	Forced Pump Operation	If this function is activated, the internal pump will run at set interval to prevent stucking of pump when unit is out of operation for long time. Based on setting 'Configuration/External pump', the External pump will be activated, too.		Use / Not use	-	Use
		Oper. Cycle	If the integrated water pump has not operated for this time period, it will be activated by force.		20 ~ 180	h	20
		Run Time	After activation, the pump will operate for this time period.		1 ~ 10	min	10

Menu hierarchy & Setting				Explanation	Detailed explanantion	Available Setting options (range)	Unit	Default
GENERAL	Pump Capacity		Pump Capacity (%)	The pump capacity is fixed at the set value.	O	10 ~ 100	%	100
	Pump Prerun/Overrun		Pump Prerun	Time how long pump will operate, before compressor starts.		1 ~ 10	h	1
			Pump Overrun	Time how long pump will operate, after compressor stopped.		1 ~ 10	min	1
	Energy Monitoring	Energy Monitoring		- **Not use** : Energy data is not displayed - **Use** : Energy data is displayed. In general, the internal sensors are used to estimate the consumed electricity and generated thermal energy. If metering module is connected, the estimated values will be overwritten with measured values. **Remark** : If anti-freeze is used, the internal metering becomes too inaccurate and either metering module should be connected or the setting should be changed to 'Not use'!		Not use / Use	-	Use
		Backup Heater Capacity	Control Standard	Definition what type of electric backup heater is used. **Remark** : When used in cascade control unit, 'External' can only be selected.		LG 1Ø / LG 3Ø / External	-	External
			Backup Heater Capacity	Input the rated capacity of the external backup heater. It is used for energy monitoring only.		1.0 ~ 10.0	kW	6
	Anti-Freezing Option			Setting defines the anti-freezing protection while the Remote controller is turned off. - **Type 1** : Outside air temp. and Water inlet temp. is supervised. - **Type 2** : Only outside air temp. is supervised.	O	Type1 / Type2	-	Type 1
	Backup Heater Release Temp.			**Bivalent point**: Below this outdoor air temperature, the backup heater is enabled. **Remark** : Even if outdoor temp. is colder, the heater will only turn on if necessary!	O	-25 ~ 18	°C	-5

Menu hierarchy & Setting			Explanation	Detailed explanantion	Available Setting options (range)	Unit	Default
GENERAL	Screed Drying	Screed Drying	Activation/Deactivation of screed-drying program. If activated, the leaving water target temp. will follow strict pattern acc. EN1264. Default time of complete program is 30 days!	O	On /Off	-	Off
		Step	If program was interrupted, it can be re-started from any step.		1 ~ 11	-	1
		Max. Temp.	Max. target temp. while Screed drying is active. Match with specification of underfloor heating system.		35 ~ 55	°C	55
		Step 8 Holding	Defines how long the max. temperature shall be kept.		1 ~ 30	days	7
	Heating Priority		Determination if room heating or sanitary hot waterhas higher priority to be heated.		Domestic Hot Water / Space heating	-	Domestic Hot Water
	Alternating defrost		If this function is activated, the outdoor units do not defrost at the same time.	O	Active / Inactive	-	Inactive
	Th delay time		The time when the number of operating outdoor units increases or decreases.		5 / 8 / 10 / 12 / 15	min	10

Menu hierarchy & Setting				Explanation	Detailed explanantion	Available Setting options (range)	Unit	Default
CIRCUIT1	Basic Settings	Main Pump Operation (Heat)	Time Format	- **Time** : Main circulation pump is turned on and off according to set On/Off times. - **Continuous operation** : Main circulation pump is running continuously during heating (cooling) period. Only in summertime it is turned off.		Time / Continuous Operation	-	Time
			On	Setting defines duration of Main pump operation to sense reference temp. from Circuit 1. Value should be adjusted based on length of pipework.		1 ~ 60	min	3
			Off	Setting defines interval between Main pump operations, while Thermo-off. Value should be adjusted based on building insulation standard.		1 ~ 60	min	3
		Main Pump Operation (Cool)	Time Format	- **Time** : Main circulation pump is turned on and off according to set On/Off times. - **Continuous operation** : Main circulation pump is running continuously during heating (cooling) period. Only in summertime it is turned off.		Time / Continuous Operation	-	Continuous Operation
			On	Setting defines duration of Main pump operation to sense reference temp. from Circuit 1. Value should be adjusted based on length of pipework.		1 ~ 60	min	3
			Off	Setting defines interval between Main pump operations, while thermo-off. Value should be adjusted based on building insulation standard.		1 ~ 60	min	3

Menu hierarchy & Setting				Explanation	Detailed explanantion	Available Setting options (range)	Unit	Default
CIRCUIT1	Basic Settings	Hysteresis Water Temp. (Heat)	Temp On	Settings define the hysteresis applied to water temp. control of Circuit 1		-9.0 ~ 0.0	K	-2.0
			Temp Off			0.0 ~ 4.0	K	2.0
		Hysteresis Water Temp. (Cool)	Temp On	Settings define the hysteresis applied to water temp. control of Circuit 1		0.0 ~ 3.0	K	0.5
			Temp Off			-3.0 ~ 0.0	K	-0.5
	Room Heating	Water Heating Set Temp.	Min.	The User's setting range of water target temperature in HEAT mode can be limited	O	15 ~ 34	°C	15
			Max.			35 ~ 70	°C	70
	Room Cooling	Water Cooling Set Temp.	Min.	The User's setting range of water target temperature in COOL mode can be limited	O	5 ~ 20	°C	5
			Max.			22 ~ 27	°C	24
CIRCUIT 2	Basic Settings	Cut Off Temperature(Heat)		Maximum temperature according underfloor heating system's manufacturer. If Mix temp. sensor reach this temperature, the Mix pump will stop and the Mixing valve will close. The water will circulate inside the Mix circuit until temperature has dropped.		20 ~ 70	°C	40
		Cut Off Temperature(Cool)		Minimum temperature according underfloor heating system's manufacturer. If temperature is reached, the Mix pump will stop and the Mixing valve will close. The water will circulate inside the Mix circuit until temperature has risen again. **Remark** : Prevention of condensate must be realized by additional measures like humidity monitor.		5 ~ 24	°C	18

Menu hierarchy & Setting				Explanation	Detailed explanantion	Available Setting options (range)	Unit	Default
CIRCUIT 2	Basic Settings	Mixing Pump Operation (Heat)	Time Format	- **Time** : Circulation pump installed in the mixing circuit is turned on and offaccording to set On/Off times. - **Continuous operation** : Circulation pump installed inthe mixing circuit is runningcontinuously during heating(cooling) period. Only insummertime it is turned off.		Time / Continuous Operation	-	Time
			On	Setting defines duration of Mixing pump operationto sense reference temp. from Circuit 2. Value should be adjusted based on length ofpipework.		1 ~ 60	min	3
			Off	Setting defines interval between Mixing pumpoperations, while Thermo-off. Value should be adjusted based on buildinginsulation standard.		1 ~ 60	min	3
		Mixing Pump Operation (Cool)	Time Format	- **Time** : Circulation pump installed in themixing circuit is turned on and offaccording to set On/Off times. - **Continuous operation** : Circulation pump installed inthe mixing circuit is runningcontinuously during heating(cooling) period. Only insummertime it is turned off.		Time / Continuous Operation	-	Continuous Operation
			On	Setting defines duration of Mixing pump operationto sense reference temp. from Circuit 2. Value should be adjusted based on length ofpipework.		1 ~ 60	min	3
			Off	Setting defines interval between Mixing pumpoperations, while Thermo-off. Value should be adjusted based on buildinginsulation standard.		1 ~ 60	min	3

Menu hierarchy & Setting				Explanation	Detailed explanantion	Available Setting options (range)	Unit	Default
CIRCUIT 2	Basic Settings	Hysteresis Water Temp. (Heat)	Temp On	Settings define the hysteresis applied to water temp. control of Circuit 2		-9.0 ~ 0.0	K	-2.0
			Temp Off			0.0 ~ 4.0	K	2.0
		Hysteresis Water Temp. (Cool)	Temp On	Settings define the hysteresis applied to water temp. control of Circuit 2		0.0 ~ 3.0	K	0.5
			Temp Off			-3.0 ~ 0.0	K	-0.5
		Comp. Operation		- **Type 1** : When the compressor operates, it operates by referencing the target temperature of both Circuit 1 and Circuit 2. When only Circuit 2 is thermo-on condition, the compressor still operates. Under certain conditions, it can happen that the temperature of Circuit 1 overshoots its target temperature. - **Type 2** : When the compressor operates, it operates by referencing the target temperature of Circuit 1. When only Circuit 2 is thermo-on condition, the compressor is stopped.		Type 1 / Type 2	-	Type 2
	Room Heating	Water Heating Set Temp.	Min.	The User's setting range of water target temperature in HEAT mode can be limited. At the same time, this is the limitation of temperature for all modes incl. AUTO mode! Set according to Underfloor heating manufacturer's documentation.	O	15 ~ 34	°C	15
			Max.			35 ~ 70	°C	70
	Room Cooling	Water Cooling Set Temp.	Min.	The User's setting range of water target temperature in COOL mode can be limited. At the same time, this is the limitation of temperature for all modes incl. AUTO mode! Set according to Underfloor heating manufacturer's documentation.	O	5 ~ 20	°C	5
			Max.			22 ~ 27	°C	24

Menu hierarchy & Setting					Explanation	Detailed explanantion	Available Setting options (range)	Unit	Default
AUTO MODE	Seasonal Auto Temp	Mode			Definition if weather-dependency (Auto mode) is applied to heating and cooling or heating only.	O	Heat & Cool / Heat Only / Cool	-	Heat Only
		Reference Temp.	O1		Graphic setting of outdoor temperature ranges for heating and cooling in Auto mode.		-25 ~ 35	°C	-10
			O2				-25 ~ 35	°C	18
			O3				10 ~ 46	°C	30
			O4				10 ~ 46	°C	40
		Set Temperature	Circuit 1	W1	Graphic setting of target temperatures in Heating/Cooling operation for Circuit 1 & 2.		15 ~ 70	°C	50
				W2			15 ~ 70	°C	40
				W3			5 ~ 27	°C	12
				W4			5 ~ 27	°C	10
			Circuit 2	W1			15 ~ 70	°C	35
				W2			15 ~ 70	°C	28
				W3			5 ~ 27	°C	18
				W4			5 ~ 27	°C	16
DOMESTIC HOT WATER	DHW Temperature Settings		DHW Set Temp Range	Min.	Limitation of setting range (DHW temp. target that User can set) The setting range is limited, if no boost heater is installed.	O	30 ~ 40	°C	40
				Max.			50 ~ 80	°C	65
			Compressor Cycle Limit Temp		This is the max. DHW temp. that that can be reached by using compressor cycle only (without using electrical boost heater). It also depends on effectiveness of heat transfer from heat pump to DHW tank (size of coil, sensor positioning). Reducing the setting may lead to increased consumption of electricity.		40 ~ 65	°C	65
			DHW hysteresis		Temperature gap between DHW target temp. (by User) and DHW temperature when re-heating starts. **Example** : Target temp. = 48 °C DHW hysteresis = 5 K ⟶ DHW heating starts at 43°C		1 ~ 30	K	5

Menu hierarchy & Setting				Explanation	Detailed explanantion	Available Setting options (range)	Unit	Default
DOMESTIC HOT WATER	Thermal disinfection 1	Disinfection active		Activation/Deactivation of anti-legionella operation. Electric heater must be connected and activated to perform this function.	O	Not use / Use	-	Not use
		Start Date		Weekday and time at which the anti-legionella function is executed.		Sun. / Mon. / Tue. / Wed. / Thu. / Fri. / Sat.	-	Fri
		Start time				0 ~ 23	hh:-	23:00
	Thermal disinfection 2	Max. Temp		Target temp. for thermal disinfection cycle.		60 ~ 80	°C	70
		Duration		Duration how long disinfection target temp. is kept. After time has elapsed, target is reduced to normal setpoint.		5 ~ 60	min	10
		Forced end time		After this time has elapsed, thermal disinfection will stop - even is disinfection temp. is not reached.		1 ~ 12	hrs	1
	DHW Heating Duration		Active Time	Duration how long DHW heating continues	O	5 ~ 95	min	30
			Stop Time	Duration how long DHW heating is interrupted (if DHW target is not reached in one cycle)		0 ~ 600	min	30
	DHW electric re-heating	DHW Electric Re-Heating		- **Use** : will be re-heated electrically if the heat pump cycle does not reach the target temp. within time setting. - **Use Disinfect** : Electric re-heating is only used for anti-legionella operation and in case of emergency. If 'Use Disinfect' is chosen, the DHW temp. setting range is limited!	O	Use always / Use Disinfect	-	Use always
		Delay Time		After time has elapsed, the DHW boost heater is released.		10 / 20 / 30 / 40 / 50 / 60 / 90 / 120 / 1440	min	30

Menu hierarchy & Setting			Explanation	Detailed explanantion	Available Setting options (range)	Unit	Default
DOMESTIC HOT WATER	DHW Re-Circulation	DHW Re-Circulation	Definition if DHW recirculation pump is connected or not. If it is used, a Schedule in the main menu becomes available to set the time frames for operating the pump.	O	Use / Not use	-	Not use
		On	Definition of recirculation pump cycling pattern during release schedule. By default, the pump operates every twenty minutes for 10 minutes (only during the set Schedule!)		5 ~ 60	min	10
		Off			5 ~ 60	min	20
SOLAR THERMAL SYSTEM	Solar collector operating range	Min.	Solar cycle will not start before collector hasreached this temp.	O	5 ~ 50	°C	10
		Max.	Solar cycle will not start if collector exceeds this temp.		60 ~ 200	°C	135
	Solar Tank Temp. Limit		Solar cycle will not start, if DHW tank has reachedits maximum temp.		20 ~ 90	°C	80
	Solar thermal △T	Temp On	Delta temp. between Solar collector and DHW tank must be reached before solar pump starts. **Example** : Actual DHW temp. = 45 °C, Temp On = 8 K ⟶ Solar cycle start, if collector exceeds 53 °C	O	3 ~ 40	K	8
		Temp Off	Delta temp. between Solar collector and DHW tank must be undercut before solar cycle stops. **Example** : Actual DHW temp. = 45 °C, Temp Off = 2K ⟶ Solar cycle stops, if collector undercuts 47°C		1 ~ 7	K	2
	Renewable DHW heating		The electrical DHW boost heater can be disabled, while solar cycle is in operation.		Enable / Disable	-	Enable

Menu hierarchy & Setting				Explanation	Detailed explanantion	Available Setting options (range)	Unit	Default
SOLAR THERMAL SYSTEM	Solar circuit flushing	Solar pump flush schedule	Control	Frequent activation of solar pump can be activated/deactivated. This function is recommended only if there are random shadows (tree, chimney..) covering the collector sensor. If solar cycle is out of operation, solar pump will start after this time has elapsed, in order to check the available solar temp. Duration should be as long as necessary, but as short as possible. If collector is cold, heat will be wasted "to the roof"!		On / Off	-	On
			Start Hour	Within this time frame the Solar flushing function is enabled. Flushing is only reasonable during daytime.		0 ~ 23	hh:-	6:00
			Start Minute			0 ~ 59	-:mm	
			End Hour			0 ~ 23	hh:-	18:00
			End Minute			0 ~ 59	-:mm	
		Sola pump flush setting	Oper. Cycle	Duration until next flushing starts		30 ~ 120	-	60
			Oper. Time	Duration how long the solar pump operates to flush the circuit		1 ~ 10	-	1
	Solar pump test run			Start' will activate the solar pump for 1 hour. During this period, the pump will be turned on and off intermittently to purge air from the cycle.		Start / Stop	-	-

Menu hierarchy & Setting			Explanation	Detailed explanantion	Available Setting options (range)	Unit	Default
SERVICE	Pump Test Run		'Test run' will activate the Main pump for 1 hour. During this period, the pump will be turned on and off intermittently to purge air from the cycle. Based on setting 'Configuration/External pump', the External pump will be activated, too. The operation can be stopped by pushing the On/Off button on the Remote controller.	O	Test Run	-	-
	Frost Protection Temp.		By default, the frost protection is activated if any water temperature sensor measures a temperature below 4°C. The temperature might be reduced, if anti-freeze agent is added to the water circuit. However, this setting is only valid when the antifreeze short pin (CN_ANTI_SW) is removed and DIP switch SW1 - No.8 is turned on. Refer to detailed description in this manual.	O	4 / -1 / -6 / -11 / -16 / -21	K	-1
	Factory Data Reset		If this function is activated, the remote controller will be restored to its initial state and the data will be reset.		OK / Cancel	-	-
	Actuator Test	Test Mode	Before actuator outputs can be tested, the 'Test mode' must be turned on. While it is enabled, normal functions will be suppressed. Make sure that all electric wiring and piping work is executed correctly before starting the Test mode!. Only professional users should use this functionality! It is highly recommended to test only one output at a time. Other than the functions "Solar pump test run" and "Pump test run", the actuators are turned on continuously until the setting is changed to Off again.	O	On / Off	-	Off

Menu hierarchy & Setting				Explanation	Detailed explanantion	Available Setting options (range)	Unit	Default
SERVICE	Actuator Test	Pump Test	A1 Main pump	In this Service menu, the actuators like pumps and valves can be activated to check for correct operation during commissioning. **Remark** : A6(Mixing valve open) and A7(mixing valve close) cannot be turned on at the same time		On / Off	-	-
			A2 External pump			On / Off	-	-
			A3 Mix pump			On / Off	-	-
			A4 Solar pump			On / Off	-	-
			A15 DHW Re-circulation pump			On / Off	-	-
		Valve Test	A5 DHW 3-way-valve			Domestic Hot Water / Space	-	-
			A6 Mixing valve open			On / Off	-	-
			A7 Mixing valve close			On / Off	-	-
			A12 Cooling 2-way-valve			On / Off	-	-
	Monitoring	Sensor Value	S11 Entering water	In this Service menu, all sensor values are displayed to easily recognize if all values are reasonable.		-	°C	-
			S12 Leaving water			-	°C	-
			S13 Backup heater outlet			-	°C	-
			S14 DHW tank			-	°C	-
			S15 Solar collector			-	°C	-
			S16 Solar tank			-	°C	-
			S17 Water flow sensor			-	°C	-
			S18 Mixing circuit			-	°C	-
			S19 Water pressure			-	°C	-
			S21 Room temp. Direct circuit			-	°C	-
			S22 Room temp. Mixing circuit			-	°C	-
			S24 Wall-mounted air sensor			-	°C	-

Menu hierarchy & Setting				Explanation	Detailed explanation	Available Setting options (range)	Unit	Default
SERVICE	Monitoring	Input status	SG1	In this Service menu, the status of allphysical inputs are listed up **Remark** : If the input signal is normal, "1"is displayed, while there is nosignal, "0" is displayed.		0 / 1	-	-
			SG2			0 / 1	-	-
			CN-EXT			0 / 1	-	-
			Antifreeze shortkey			0 / 1	-	-
			Thermostat (Heating)			0 / 1	-	-
			Thermostat (Cooling)			0 / 1	-	-
			Thermostat (DHW)			0 / 1	-	-
		Output status	A1 Main pump	In this Service menu, the status of allphysical outputs are listed up **Remark** : Displays "1" if a signal is beingsent, and "0" if there is no signal.		0 / 1	-	-
			A2 External pump			0 / 1	-	-
			A3 Mix pump			0 / 1	-	-
			A4 Solar pump			0 / 1	-	-
			A5 DHW 3-way-valve			Domestic Hot Water / Space	-	-
			A6 Mixing valve (Open)			0 / 1	-	-
			A7 Mixing valve (Close)			0 / 1	-	-
			A12 Cooling 2-way-valve			0 / 1	-	-
			A15 DHW Re-circulation pump			0 / 1	-	-
			A8 Backup heater (Step 1)			0 / 1	-	-
			A9 backup heater (Step 2)			0 / 1	-	-
			A10 DHW Boost heater			0 / 1	-	-
			A11 External boiler			0 / 1	-	-

Menu hierarchy & Setting				Explanation	Detailed explanation	Available Setting options (range)	Unit	Default
SERVICE	Runtimes reset	Comp. Reset		In this menu, runtimes can be reset.		Reset	-	-
		Backup heater Reset				Reset	-	-
		Boost heater Reset				Reset	-	-
		Pump operation time				Reset	-	-
		Solar pump Reset				Reset	-	-
CONNECTIVITY	Dry Contact		Dry Contact Mode	- **Manual** : Unit must be turned-on by Remote controller after release by Dry contact - **Auto** : Unit will automatically start (return to previous operation) after release by Dry contact		Auto / Manual	-	Auto
			CN_CC	- **D/C Automatic** : Unit will recognize connected Dry contact after power-on - **D/C Not Installed** : Dry contact is not installed - **D/C Installed** : Dry contact is installed and unit always checks its state Additionally, check setting for 'Dry contact mode'!		D/C Automatic / D/C Not Installed / D/C Installed	-	D/C Automatic
	Central Control Address			Address setting if LG Central controller is connected		00 ~ FF	hexadec.	00
	Modbus Address			Address setting if heat pump is controlled via Modbus by 3rd-party controller **Remark** : To use this function, switch No.1 of DIP switch SW 1 must be turned ON.	O	01 ~ FF	hexadec.	01

Menu hierarchy & Setting			Explanation	Detailed explanation	Available Setting options (range)	Unit	Default
CONNECTIVITY	CN_EXT		- **Not use** : CN_EXT is not used - **Simple operation** : Open= Operation off Closed= Operation On - **Simple dry contact** : Open= Operation Off with dry contact lock Closed= lock released, operation on/off depends on setting 'Dry contact mode' - **Single emergency stop** : Open= Emergency stop with forced lock Closed= Forced lock released	O	Not use / Simple Operation / Simple dry contact / Single emergency stop	-	Not use
	3rd party boiler	Mode	Boiler can be activated either manually (by User setting) or automatically (below certain outdoor temp.)	O	Auto / Manual	-	Manual
		Temp	Boiler will be activated, if outdoor temp. undercuts this value. Heat pump will stop.		-25 ~ 25	°C	-7
		Hysteresis	Boiler will be de-activated and heat pump reactivated, if outdoor temp. exceeds temp. setting plus hysteresis. **Example** : 'Temp.' = -7°C, 'Hysteresis' = 4K ⟶ Boiler is enabled at -7°C and disabled at -3°C outdoor temp.		2 ~ 5	K	4

Menu hierarchy & Setting				Explanation	Detailed explanation	Available Setting options (range)	Unit	Default
CONNECTIVITY	Meter Interface	Modbus Address		- **Not use** : Meter interface is not connected - **B0** : Meter interface is connected (address 1) DIP SW_01M @ PENKTH000 = Off - **B1** : Meter interface is connected (address 2) DIP SW_01M @ PENKTH000 = On		Not use / B0 / B1	-	Not use
		Unit	Port 1	Spec of wattmeter at Port 1 (Power consumption heat pump)		0.1 ~ 9999.9	pulse/ kWh	0000.0
			Port 2	Spec of wattmeter at Port 2 (Power consumption backup heater)		0.1 ~ 9999.9	pulse/ kWh	0000.0
			Port 3	Spec of wattmeter at Port 3 (Power consumption DHW boost heater)		0.1 ~ 9999.9	pulse/ kWh	0000.0
			Port 4	Spec of heat meter at port 4 (Heat produced by heat pump + backup heater)		0.1 ~ 9999.9	pulse/ kWh	0000.0
	Energy State	Signal Type		External devices such as Home Energy Management Systems can be used to influence the operation of the heat pump. Either two 230V inputs are used to collect the status or Modbus isn used (for instance when connected to LG ESS).	O	Not use / 230V inputs / Modbus	-	Not use

Menu hierarchy & Setting				Explanation	Detailed explanation	Available Setting options (range)	Unit	Default
CONNECTIVITY	Energy State	Energy State Definition	Energy State 5	Setting whether Energy state 5 is used or not.	O	Not use / Use	-	
			Energy State 5 - Heat Temp.	Definition how much Heating target temp. shall increase when Energy state 5 is applied.		0 ~ 30	K	5
			Energy State 5 - Cool Temp.	Definition how much Cooling target temp. shall decrease when Energy state 5 is applied.		-30 ~ 0	K	-5
			Energy State 5 - DHW Temp.	Definition how much DHW target temp. shall increase when Energy state 5 is applied.		0 ~ 50	K	30
			Energy State 6	Setting whether Energy state 6 is used or not.		Not use / Use	-	
			Energy State 6 - Heat Temp.	Definition how much Heating target temp. shall increase when Energy State 6 is applied.		0 ~ 30	K	2
			Energy State 6 - Cool Temp.	Definition how much Cooling target temp. shall decrease when Energy state 6 is applied.		-30 ~ 0	K	-2
			Energy State 6 - DHW Temp.	Definition how much DHW target temp. shall increase when Energy state 6 is applied.		0 ~ 50	K	10
			Energy State 7	Setting whether Energy state 7 is used or not.		Not use / Use	-	
			Energy State 7 - Heat Temp.	Definition how much Heating target temp. shall increase when Energy State 7 is applied.		-30 ~ 0	K	-2
			Energy State 7 - Cool Temp.	Definition how much Cooling target temp. shall decrease when Energy State 7 is applied.		0 ~ 30	K	2
			Energy State 7 - DHW Temp.	Definition how much DHW target temp. shall increase when Energy State 7 is applied.		-50 ~ 0	K	0

Menu hierarchy & Setting				Explanation	Detailed explanation	Available Setting options (range)	Unit	Default
CONNECTIVITY	Energy State	Energy State Definition	Energy State 8	Setting whether Energy state 8 is used or not.	O	Not use / Use	-	
			Energy State 8 - Heat Temp.	Definition how much Heating target temp. shall increase when Energy State 8 is applied.		-30 ~ 0	K	-5
			Energy State 8 - Cool Temp.	Definition how much Cooling target temp. shall decrease when Energy State 8 is applied.		0 ~ 30	K	5
			Energy State 8 - DHW Temp.	Definition how much DHW target temp. shall increase when Energy State 8 is applied.		-50 ~ 0	K	0
		Digital Input Assignment	State 3 (0:1)	**Definition of Energy state 3** : - **3** : Cooling/no effect, Heating/Target +2K, DHW/Target +5K - **4** : Cooling/no effect, Heating/no effect, DHW/Target=80°C - **5~8** : According setting "Energy state definition"	O	3 ~ 8	-	3
			State 4 (1:1)	**Definition of Energy state 4** : - **3** : Cooling/no effect, Heating/Target +2K, DHW/Target +5K - **4** : Cooling/no effect, Heating/no effect, DHW/Target = 80 °C - **5~8** : According setting "Energy state definition"		3 ~ 8	-	4
	Thermostat Control Type			Setting what type of thermostat is connected		- heat & Cool - heat & Cool/DHW - DHW only	-	Heat & Cool

Menu hierarchy & Setting			Explanation	Detailed explanation	Available Setting options (range)	Unit	Default
CASCADE	Basic settings	Cascade control value	Setting temperature difference between inlet water temperature and target outlet water temperature. Cascade control unit refers to target outlet water temperature when operating the outdoor units.		3 / 5 / 7 / 10	℃	5
		ECO mode	If this function is activated, the efficiency will be improved and the electrical consumption will be reduced. Eco mode has a relatively slow temperature change compared to common mode.		Use / Not use	-	Not Use
		System Allowance	Allowable percentage of outdoor units with errors. If the percentage of outdoor units with errors exceeds the set value, all outdoor units will stop operating.		70 / 80 / 90 / 100	%	70
	Group Configuration	X0 (Cooling, Heating, Hot Water)	After zone and number setting of the outdoor units, checking the outdoor unit's number in the zone.		-	-	-
		X1 (Cooling only)					
		X2 (Heating only)					
		X3 (Hot Water only)					
		X4 (Cooling, Hot Water)					
		X5 (Heating, Hot Water)					
		X6 (Cooling, Heating)					

Menu hierarchy & Setting		Explanation	Detailed explanation	Available Setting options (range)	Unit	Default
OUTDOOR UNIT	ODU Install Count	Setting the number of the outdoor units installed.		1 / 2 / 3 / 4 / 5 / 6 / 7 / 8	-	
	ODU Address 1	After zone and number setting of the outdoor units, matching ODU address with the outdoor unit's number.		1 / 2 / 3 / 4 / 5 / 6 / 7 / 8	-	1
	ODU Address 2					2
	ODU Address 3					3
	ODU Address 4					4
	ODU Address 5					5
	ODU Address 6					6
	ODU Address 7					7
	ODU Address 8					8
INFORMATION	Pump Operation Time	In this menu, cascade control unit's pump operation time is displayed.		-	h	
	IDU Operation Time	In this menu, cascade control unit's operation time is displayed.		-	h	
	Current Flow Rate	In this menu, one outdoor unit's current flow rate is displayed.		-	L/min	
	Data Logging	In this menu, cascade control unit's data log is displayed.		-	-	

Installer settings in detail

This chapter provides extended explanations for some of the settings.

Configuration - Select room devices

In this menu, it is possible to flexibly define the devices used to control room air temperature.

If third-party thermostats are used, the thermostat-input and/or a Dry contact can be used for connection to the heat pump.

Example)
Configuration - Select room devices - RMC linked to: Circuit1&2
Configuration - Select room devices - Circuit 1 - Digital input - CN-THMO
Configuration - Select room devices - Circuit 2 - Digital input - CN-CC

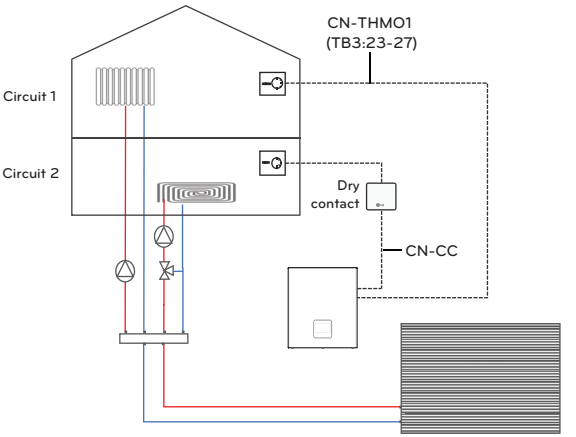

NOTE

In this setup, Mode-change is only possible through Thermostat-inputs at Indoor unit (and by using the Remote controller).
The thermostat connected via Dry contact shall be used only for give thermo-on/off signal.

Configuration - External Pump

This function can be set to control the external water pump. Three options are possible, related to the location of the pump.

Use

In case of long piping, the External pump is used to overcome high pressure losses or as secondary pump in combination with a parallel buffer tank. With this setting, the pump always operates in parallel to internal pump.

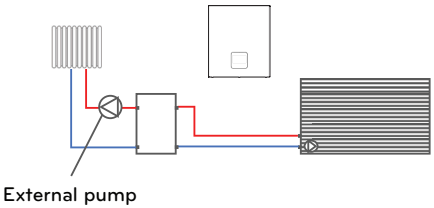

Heating/Cooling

In case of long piping, the External pump is used to overcome high pressure losses. The pump is installed downstream of DHW connection. With this setting, the pump operates in parallel to internal pump during space heating and cooling mode. While the DHW tank is charged, the External pump remains off.

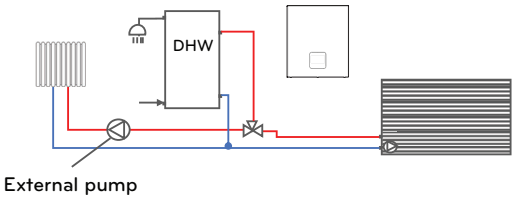

Circuit1

If Mixing circuit is configured, the External pump can be used to serve the direct circuit (Circuit1), while the Mix pump serves Circuit2. In this setting, the External pump operates according to thermo-on/off state of Circuit1.

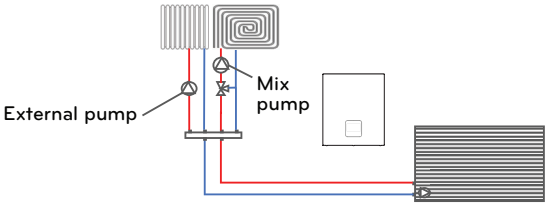

Configuration - Boiler output

This setting must be adjusted based on the system layout.

Layout 1

Boiler output = Heat & DHW

DHW by heat pump activated (⟶ DIP switch SW2/2&3)

Both, heat pump and boiler can be used for space heating and DHW heating. If the Bivalent temperature is reached, the boiler takes over completely and the heat pump is turned off.

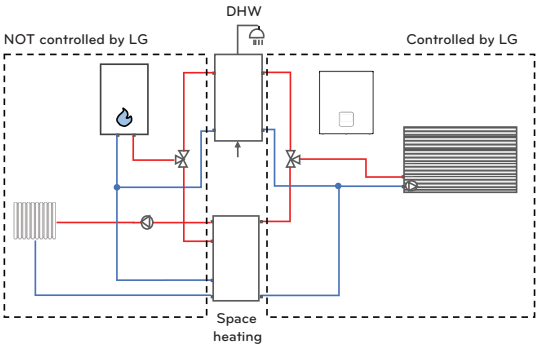

Layout 2

Boiler output = Heating only

DHW by heat pump activated (⟶ DIP switch SW2/2&3)

The boiler is connected to the space heating circuit only. The heat pump is used for DHW heating even below Bivalent temperature.

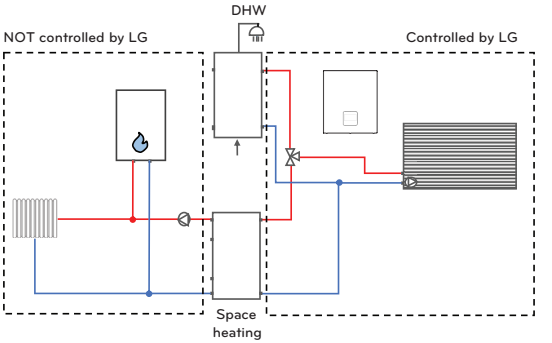

Layout 3

Boiler output= Heating only

DHW by heat pump deactivated (⟶ DIP switch SW2/2&3)

The boiler is connected to the space heating circuit and covers the DHW demand throughout the year. The heat pump is used for space heating above Bivalent temperature only.

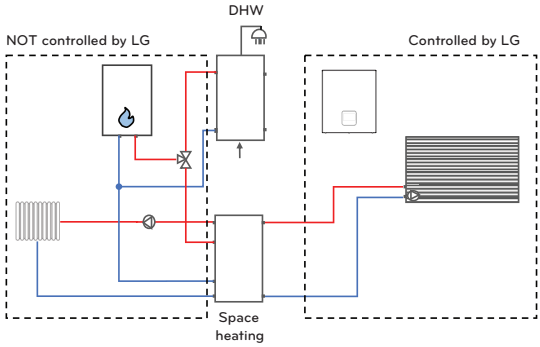

NOTE

In any case, the boiler is not controlled actively. Only it is released and then must operate according its own controls. The External pump output should not be used for the secondary pump, because it will be deactivated, when the heat pump is not in operation!

Configuration - Select outdoor air sensor

Setting defines if the pre-installed air sensor (mounted at grille of outdoor unit) or a dedicated outside sensor (wall-mounted / accessory) is used for weather-dependent operation (Auto mode). It is highly recommended to use wall-mounted sensor – especially when the outdoor unit is exposed to sunlight.

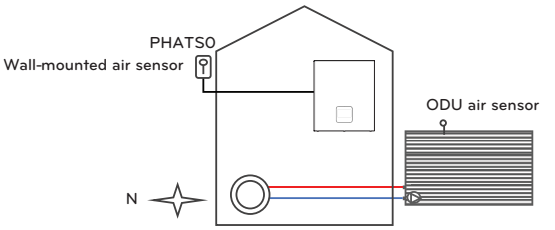

NOTE

Even if wall-mounted sensor is used, the sensor at outdoor unit must NOT be dis-connected, as it is still used to control the refrigerant cycle!
To select 'Wall-mounted air sensor', a dedicated accessory (PHATS0) is required.

General - Water Flow Control

This setting defines how the integrated water circulation pump is controlled.

- Pump Capacity: The pump operates with the capacity set (10~100 %)

NOTE

The flow rate has a strong impact on the efficiency of the system and also may lead to errors (CH 14) and flow noise.
The settings should be adjusted only by professional users.

General - Anti-freezing option

This setting defines the level of frost protection, when the Remote control is turned off.

Setting	Detection	Case	Operation
Type1	Outside air temp. + Outlet water temp.	Outside temp. < 0 °C AND Outlet water temp. ≤ 20 °C	Pump always ON
		Outside temp. ≥ 0 °C AND Outlet water temp. > 20 °C	Pump always OFF
		Except for above two cases	Pump intermittently ON
Type2	Outside air temp.	Outside temp. < 9 °C	Pump intermittently ON
		Outside temp. ≥ 9 °C	Pump always OFF

⚠ CAUTION

If the setting is changed to ‚Type2' there is an increased risk of freezing!

General - Backup heater release temp.

Depending on local climate conditions, it is necessary to change the temperature condition in which backup heater is released. The backup heater operates in 'Bivalent-parallel' to heat pump cycle. It means, below the set outside temperature is released, but it will only run if the target temperature is not reached by cycle.

NOTE

DIP switches SW2-6/7 defines if half or full capacity of electric heater is used to support the heating. If full capacity is enabled, the steps are released based on gap between target and actual temperature.

1) TOL = -28 °C (R290 Mono)

2) Heating design temp. (Seasonal auto temp/Outdoor temp/O1)

3) General/Backup heater release temp

4) No heating temp. (Seasonal auto temp/Outdoor temp/O2)

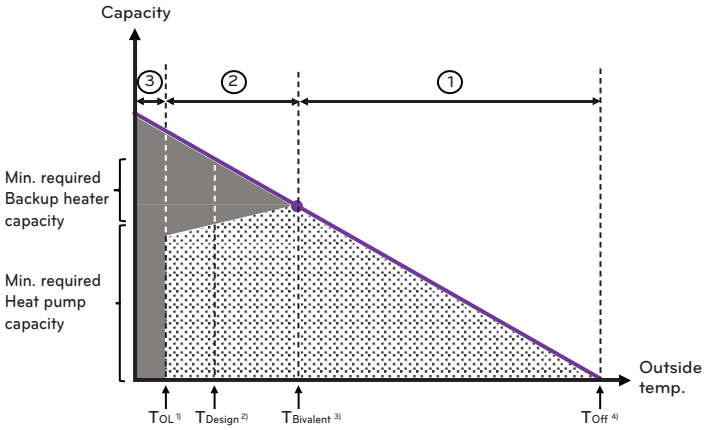

①	Heat pump only
②	Heat pump+ Backup heater support
③	Backup heater only (Emergency operation)

General - Screed drying

This function is used to increase the temperature of a newly installed underfloor heating system. It prevents that the cement is heated too fast and breaks. After activation, the main screen displays „Screed drying“ and the step in progress at the bottom of the screen.

- Step: By default the program starts with Step1. If screed drying was interrupted, it is possible to commence from any other step.
- Max. temp.: Defines the peak temperature.
- Step 8 Holding: Defines the time how long the Max. temperature is kept.

	Step										
	1	2	3	4	5	6	7	8	9	10	11
Outlet temp. in °C	25	Max. temp.	Off	25	35	45	Max. temp.	Max. temp.	45	35	25
Duration in hours	72	96	72	24	24	24	24	Holding time	72	72	72

⚠ CAUTION

The set Max. temp. must align with the specification provided by manufacturer of the underfloor heating!

NOTE

- If the upper limit setting value of the heating LW temperature is 55 °C or lower, it is set to 55 °C forcibly. If the lower limit setting value of the heating LW temperature is 25 °C or higher, it is set to 25 °C forcibly.
- During Screed drying operation, button input - except for installer functions - and temperature display is restricted.
- When the power is applied again after a power outage during product operation, the product operation state before power failure is remembered and the product is automatically operated.
- Screed drying operation stops when an error occurs. When error is cleared, screed drying program re-starts. (However, if the wired remote control is reset to the error occurrence state, it is compensated in the unit of one day)
- Upon releasing after an error, Screed drying operation may take up to 1 minute of waiting time after boot up. (The Screed drying operation status is judged as 1 minute cycle.)
- During Screed drying operation, Silent mode, DHW heating, Solar thermal heating is set to Off!
- During Screed drying operation, timers and reservations are not executed!
- After all steps are completed, set the function to 'Off'!

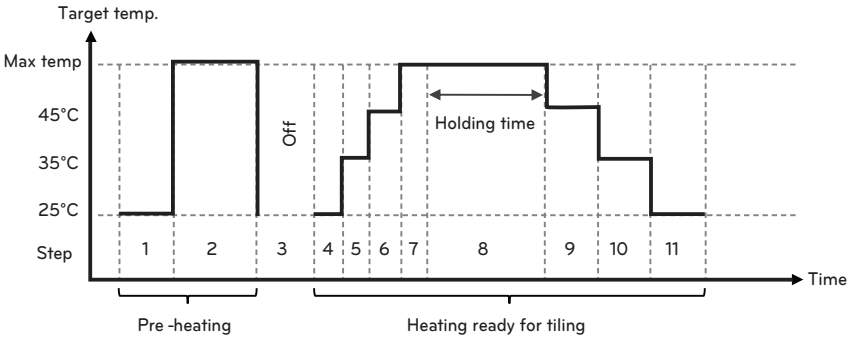

General – Alternating defrost

This function is used to prevent that the outdoor units defrost at the same time. If the outdoor units are defrosting at the same time, the heating capacity drops a lot. To reduce the drop of heating capacity, the outdoor units are defrosting alternately.

Circuit 1(2) - Room heating - Water heating set temperature

- This setting limits the water temperature range applied to Heating operation that the User can set manually in the Remote controller

Circuit 1(2) - Room cooling - Water cooling set temperature

- This setting limits the water temperature range applied to Cooling operation that the User can set manually in the Remote controller.

NOTE

- If underfloor system is used for cooling, it is very important to keep leaving water temperature higher than 16 °C. Otherwise, dew condensation can occur on the floor.
- In case of humid environment, do not set leaving water temperature below 18 °C.
- Do not use radiators for cooling! If cold water enters the radiators, dew will appear on the surface of the radiator.
- If Fan coil units (FCU) are used, it is possible to cool the water down to 5 °C.
- If FCU are used together with other types of emitters , the 2way-valve should be installed to block circuits not suitable for cold water.

Auto mode - Seasonal auto temp.

If mode is set to Auto, the target temperature is adapted to outside air temperature.

This way of control is much more energy efficient than heating(cooling) mode with fixed target temperature. If 'Mode' is set to 'Heating & Cooling', it is possible to define outdoor temperatures at which the unit switch-over from Heating to Off to Cooling and vice versa.

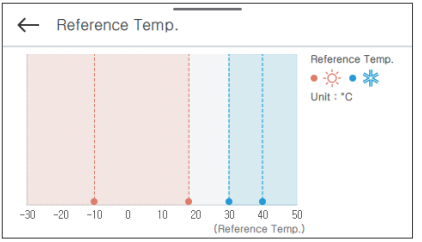

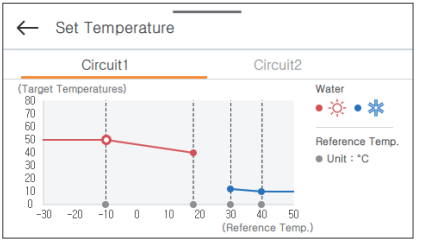

Setting	Description	Range	Default		Boundary
			Circuit 1	Circuit 2	
O1	Heating design temp.	-25 ~ 35 °C	-10 °C	-10 °C	O1 ≤ O2 -1
O2	Heating limit temp.		18 °C	18 °C	O2 ≥ O1 +1 O2 ≤ O3 -5
O3	Enable cooling	10 ~ 46 °C	30 °C	30 °C	O3 ≥ O2 +5 O3 ≤ O4 -1
O4	Cooling design temp.		40 °C	40 °C	O4 ≥ O3 +1
W1	High temp. (Heating)	15 [1] ~ 70 [2] °C	50 °C	35 °C	W1 ≥ W2
W2	Low temp. (Heating)		40 °C	28 °C	W2 ≤ W1
W3	High temp. (Cooling)	5 ~ 27 °C	12 °C	18 °C	W3 ≥ W4
W4	Low temp. (Cooling)		10 °C	16 °C	W4 ≤ W3

1) Without Backup heater, the lowest outlet water temp. is 20 °C.

2) If Control method is set to 'Outlet' water temperature control, the maximum setpoint in heating is 65 °C.

※ Range is limited by settings in menu 'Circuit 1(2) / Room cooling / Water cooling set temp.' In case of 'Inlet water control', the minimum setpoint is 5 degrees higher compared to 'Outlet water temp. control'.

Domestic hot water - DHW temperature settings

The DHW target temperature is set in Main screen by User. ‘DHW set temp range’ will limit the setting range. The type and volume of the tank, as well as the consumption should be taken into account.

Case 1: ‘DHW target temp.’ set lower than ‘Compressor cycle limit temp.’

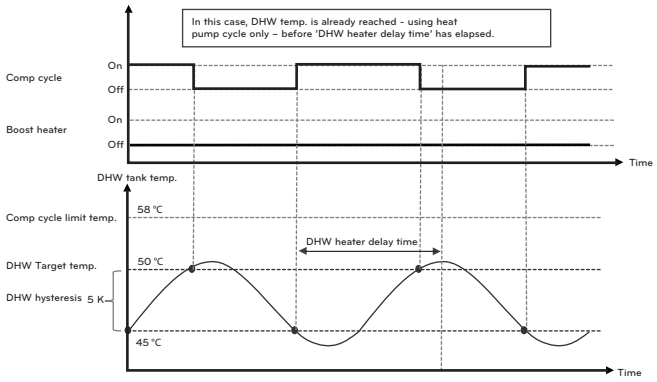

Case 2: ‘DHW target temp.’ set higher than ‘Compressor cycle limit temp.’

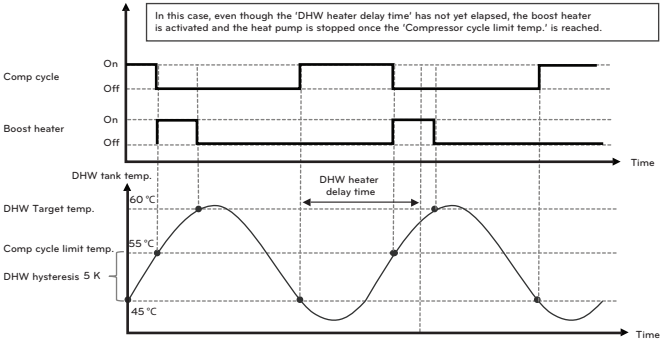

NOTE

If ‘DHW target temp.’ is higher than ‘Comp. cycle limit temp.’ (Case 2), the Cycle limit temp. will be used as reference for ‘DHW hysteresis’!

Set ‘DHW target temp.’ as low as possible (with respect to required comfort level) and ‘Compressor cycle limit temp.’ as high as possible (as long as no error appears).

Domestic hot water - Thermal disinfection

This function can help to prevent legionella bacteria from growing. It is recommended to activate the function if the DHW is not consumed on a regular base.

In order to kill the bacteria, a temperature of 70 °C or higher is recommended. For this purpose it is necessary to install and activate an electric boost heater.

During Thermal disinfection, the target hot water temp. is increased for a certain period of time.

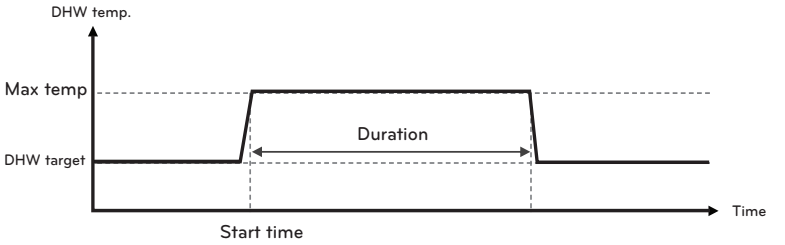

Domestic hot water - DHW heating duration
Domestic hot water - DHW electric re-heating

The following settings can be used to limit the duration of DHW heating and DHW boost heater:

- Domestic hot water - DHW heating duration - Active time:
  Maximum time how long DHW heating by heat pump cycle is activated, until operation mode returns to space heating
- Domestic hot water - DHW heating duration - Stop time:
  After DHW heating by heat pump cycle has stopped, it won't commence before 'Stop time' time has elapsed. The Boost heater might be used.
- Domestic hot water - DHW electric re-heating - DHW heater delay time:
  Time gap between start of DHW heating by cycle and release of DHW boost heater.

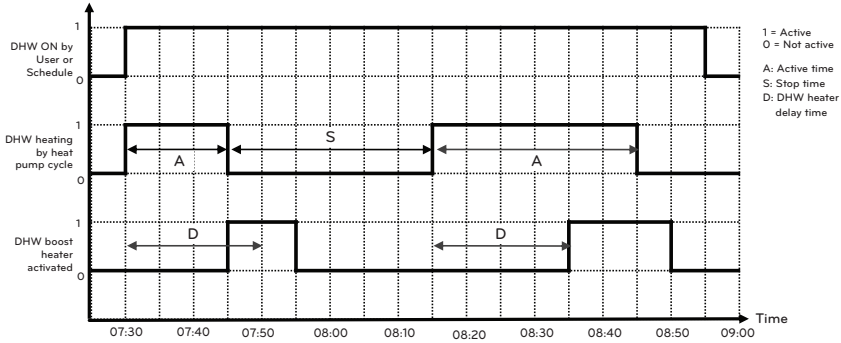

Time	Event
7:30	The User activates the DHW function in the Remote controller. DHW heating starts by using the heat pump cycle, as thermo-on condition is reached.
7:45	The DHW boost heater is activated, even though the 'DHW boost heater delay time' has not yet ended. This is because the DHW temp. reached the 'Compressor cycle limit temp.' The compressor cycle turns off to prevent High-pressure error. The 'Active time' immediately ends and 'Stop time' counter starts.
7:50	The 'DHW heater delay time' (20 min) ends, but it has no effect, because the heater is already operating.
7:55	After reaching the DHW set point, DHW heating stops.
8:10	The DHW temperature has dropped below set point again, but the DHW heating is not started due to 'Stop time' (30 min).
8:15	After end of 'Stop time', DHW heating commences using the heat pump cycle only, because the DHW temp. is lower than 'Compressor cycle limit temp.'
8:35	The DHW boost heater is enabled, after boost heater delay time. The heater starts, because DHW target temp. is not reached. The Compressor cycle remains active, because DHW temp. is still lower than 'Compressor cycle limit temp.'
8:45	After end of 'Active time', the heat pump cycle stops. DHW heating commences using the Boost heater only.
8:50	The DHW target temperature is reached. The heater stops.
8:55	The User turns off DHW heating in the Remote controller.

Domestic hot water - DHW re-circulation

In this menu, the recirculation pump can be activated and the pattern of operation is defined.

NOTE

Operation times of the Recirculation pump should be limited to times when comfort is really needed. If the pump is released for long time, energy consumption may increase a lot due to heat dissipation into the building and need to re-heat the hot water tank!

Example)

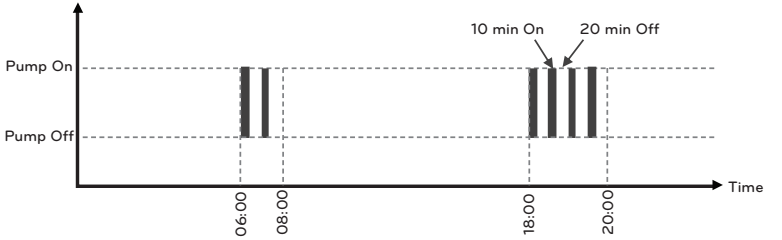

Installer level

Setting - Domestic hot water - DHW re-circulation - Enable re-circulation = Use
Setting - Domestic hot water - DHW re-circulation - On = 10 min
Setting - Domestic hot water - DHW re-circulation - Off = 20 min

NOTE

A schedule (accessible via Main screen) becomes available, after 'Enable recirculation' is set to 'Use'.

User level

1. Schedule - DHW Recirculation - Usage = Use
   Schedule - DHW Recirculation - Time = 06:00 ~ 07:00
   Schedule - DHW Recirculation - Day = Everyday
2. Schedule - DHW Recirculation - Usage = Use
   Schedule - DHW Recirculation - Time = 18:00 ~ 20:00
   Schedule - DHW Recirculation - Day = Everyday

NOTE

If you set the start time before the current time, the pump will be activated tomorrow at the set time.

Example: If you set times as above and it is 19:00 now, the pump will be activated tomorrow at 06:00 for the first time!

Solar thermal system - Solar collector operating range
Solar thermal system - Solar tank temp. limit
Solar thermal system - Solar thermal dT

Basically, the Solar pump starts if the Collector temperature (TB_SENSOR/SOLAR) is higher than the temperature at bottom part of the DHW tank (CN_TH4/WATER TANK SENSOR(B)). By default, the pump starts when the collector is 8 degrees warmer and stops when it is only 2 degrees warmer. This is because some heat losses can be expected on the way from roof to the technical room.

Additionally, the pump is turned off, when either the collector or the tank reaches it's maximum temperature. The values can be adjusted based on local conditions.

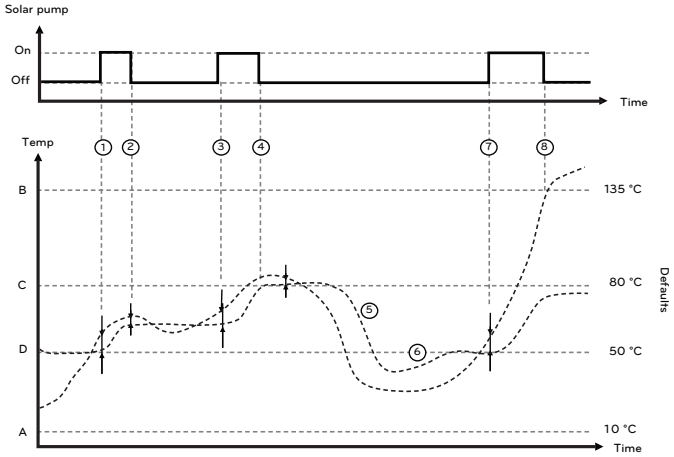

A) Solar thermal system - Solar collector operating range - Min
B) Solar thermal system - Solar collector operating range - Max
C) Solar thermal system - Solar tank temp limit - Max
D) DHW target temperature (User setting)

No	Event
1	Solar pump starts, because Collector temp. is eight degrees warmer than the tank
2	Solar pump stops, because Collector temp. is only two degrees warmer.
3	After cloudy period, the Collector temp. rises again. Solar pump starts, because Collector temp. is again eight degrees warmer than the tank.
4	The collector is still five degrees warmer, but the pump stops, because the tank has reached its maximum temperature of 80°C.
5	In the evening, the tank temperature drops due to consumption.
6	The heat pump re-heats the DHW tank up to its setpoint of 50°C, as the collector is not hot enough.
7	The next morning, the Solar pump starts, because Collector temp. is eight degrees warmer than the tank.
8	The collector has reached its maximum temperature of 135°C. The pump stops. The solar fluid inside of the collector evaporates and pushes the liquid into the pipeworks. The Solar system is at standstill.

Service - Pump test run

'Test run' will activate the Main pump of all outdoor units for 1 hour. During this period, the pump will be turned on and off intermittently to purge air from the cycle.
Based on setting 'Configuration/External pump', the External pump will be activated, too.
The operation can be stopped by pushing the On/Off button on the Remote controller.

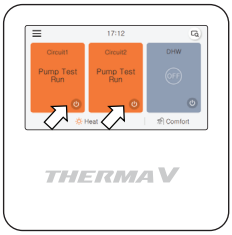

NOTE

The settings for Dry contact should be disabled to use the Pump test run function.
Connectivity - Dry contact - CN-CC = D/C Not installed
Connectivity - CN_EXT = Not use
After finishing the Test run, make sure to change back to previous settings.

Service - Actuator test - Test mode
Service - Actuator test - Pump test
Service - Actuator test - Valve test

These functions allow direct activation and de-activation of individual pumps and valves to check correct wiring and hydronic connection.

NOTE

The settings for Dry contact should be disabled to use the Actuator test function.
Connectivity - Dry contact - CN-CC = D/C Not installed
Connectivity - CN_EXT = Not use
After finishing the Actuator test, make sure to change back to previous settings.

Service - Frost protection temperature

A frost protection function prevents freeze up of water pipes. If any pipe sensor measures a temperature below 4°C (Default), the water pump and backup heater are turned on.

Defrosting operation is blocked if the leaving water temperature drops below 4 °C (Default) and it won't start until a temperature of 15 °C (Default) is reached.

If anti-freeze (glycol) is added to the water, the permitted temperature level can be as low as -1 °C(lowered by 5 degrees) down to -21 °C (lowered by 25 degrees).

All related temperatures will be shifted in the same way. For example, if 'Frost Protection Temp.' is selected as -1 °C, all temperatures that are the basis for judging frost protection are shifted by 5 degrees, too.

Consequently, the frost protection will be cancelled at a water temperature of 10 °C instead of 15 °C.

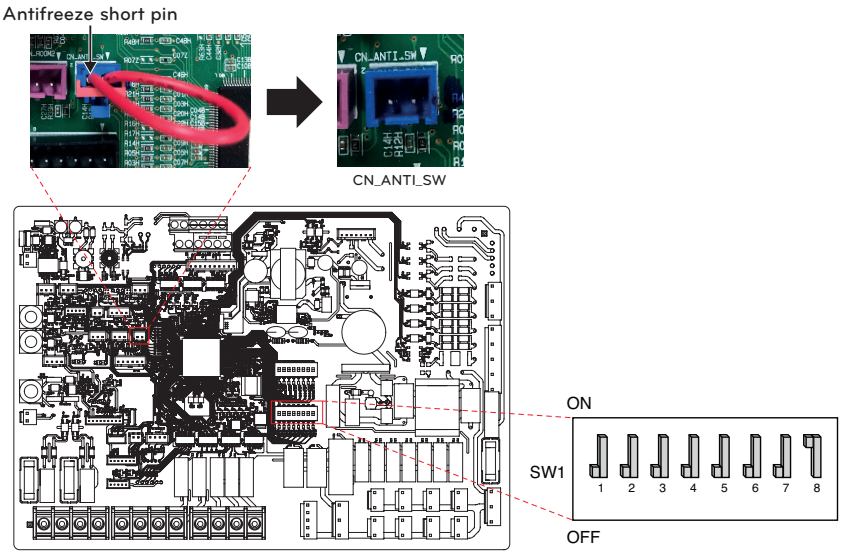

NOTE

Before change of setting is applied, the antifreeze short pin (CN_ANTI_SW) must be removed and DIP switch SW1 - No.8 must be on.
Frost protection must be tested with a refractometer on a frequent basis!

Connectivity - Modbus address(HEX)

This function allows control of the heat pump by external devices.

NOTE

To use this function DIP switch No.1 of SW1 must be set to ON and No.2 to ON.

Modbus memory map

- Baud Rate : 9 600 bps
- Stop Bit : 1 stop bit
- Parity : None Parity

Coil Register (0x01)

Register	Description	Value explanation
00001	Enable/Disable (Heating/Cooling)	0 : Operation OFF / 1 : Operation ON
00002	Enable/Disable (DHW)	0 : Operation OFF / 1 : Operation ON
00003	Silent Mode Set	0 : Silent mode OFF / 1 : Silent mode ON
00004	Trigger Disinfection operation	0 : Keep status / 1 : Operation start
00005	Emergency Stop	0 : Normal operation / 1 : Emergency stop
00006	Trigger Emergency Operation	0 : Keep status / 1 : Operation Start
00007	Active Power Limitation	0: Not used / 1: Limit power acc. Reg. 40025

Discrete Register (0x02)

Register	Description	Value explanation
10001	Water flow status	0 : Flow rate ok / 1 : Flow rate too low
10002	Water Pump status	0 : Water Pump OFF / 1 : Water Pump ON
10003	Ext. Water Pump status	0 : Water Pump OFF / 1 : Water Pump ON
10004	Compressor status	0 : Compressor OFF / 1 : Compressor ON
10005	Defrosting status	0 : Defrost OFF / 1 : Defrost ON
10006	DHW heating status (DHW Thermal On/Off)	0 : DHW inactive / 1 : DHW active
10007	DHW Tank disinfection status	0 : Disinfection inactive / 1 : Disinfection active
10008	Silent mode status	0 : Silent mode inactive / 1 : Silent mode active
10009	Cooling status	0 : No cooling / 1 : Cooling operation
10010	Solar pump status	0 : Solar pump OFF / 1: Solar pump ON
10011	Backup heater (Step 1) status	0 : OFF / 1 : ON
10012	Backup heater (Step 2) status	0 : OFF / 1 : ON
10013	DHW boost heater status	0 : OFF / 1 : ON
10014	Error status	0 : no error / 1 : error state
10015	Emergency Operation Available (Space heating/cooling)	0 : Unavailable / 1 : Available
10016	Emergency Operation Available (DHW)	0 : Unavailable / 1 : Available
10017	Mix pump status	0 : Mix pump OFF / 1 : Mix pump ON

Input Register (0x03)

Register	Description	Value explanation
30001	Error Code	Error Code
30002	ODU operation Cycle	0 : Standby(OFF) / 1 : Cooling / 2 : Heating
30003	Water inlet temp.	[0.1 °C ×10]
30004	Water outlet temp.	[0.1 °C ×10]
30005	Backup heater outlet temp.	[0.1 °C ×10]
30006	DHW tank water temp.	[0.1 °C ×10]
30007	Solar collector temp.	[0.1 °C ×10]
30008	Room air temp. (Circuit 1)	[0.1 °C ×10]
30009	Current Flow rate	[0.1 LPM ×10]
30010	Flow temp. (Circuit 2)	[0.1 °C ×10]
30011	Room air temp. (Circuit 2)	[0.1 °C ×10]
30012	Energy State input	0 : Energy state 0; 1: Energy state 1….
30013	Outdoor Air temp.	[0.1 °C ×10]
30014	Water pressure	[0.1 bar ×10]
30015	Solar storage temp. (bottom sensor)	[0.1 °C ×10]
30037	ENERGY_INSTANTANEOUS_TOTAL(High)	[W] 1), 2), 3), 4)
30038	ENERGY_INSTANTANEOUS_TOTAL(Low)	
30039	ENERGY_ACCUMULATIVE_TOTAL(High)	[Wh] 1), 2), 3), 4)
30040	ENERGY_ACCUMULATIVE_TOTAL(Low)	
30041	ENERGY_ACCUMULATIVE_HEAT(High)	[Wh] 1), 2), 3)
30042	ENERGY_ACCUMULATIVE_HEAT(Low)	
30043	ENERGY_ACCUMULATIVE_COOL(High)	[Wh] 1), 2), 3)
30044	ENERGY_ACCUMULATIVE_COOL(Low)	
30045	ENERGY_ACCUMULATIVE_DHW(High)	[Wh] 1), 2), 3)
30046	ENERGY_ACCUMULATIVE_DHW(Low)	
39998	Product Group	0x8 X (0x80, 0x83, 0x88, 0x89)
39999	Product Info.	Split : 0 / Monobloc : 3 / High Temp. : 4 / Medium Temp. : 5 / System Boiler : 6

NOTE

1) Total energy consumption = (High) value * 2^16 + (Low) value
2) The calculated power consumption is an estimation, the accuracy cannot be guaranteed. The energy data should NOT be used for being invoiced or requested to government incentive and subsidy.
3) Power consumption of heat pump outdoor unit (Comp. & Fan only) + Entire Indoor unit (Pump and Backup Heater)
4) Total : Heat + Cool + DHW

Holding Register (0x04)

Register	Description	Value explanation
40001	Operation Mode	0 : Cooling / 4 : Heating / 3 : Auto
40002	Control method (Circuit 1/2)	0 : Water outlet temp. control 1 : Water inlet temp. control 2 : Room air control
40003	Target temp (Heating/Cooling) Circuit 1	[0.1 °C ×10]
40004	Room Air Temp. Circuit 1	[0.1 °C ×10]
40005	Shift value(Target) in auto mode Circuit 1	1K
40006	Target temp (Heating/Cooling) Circuit 2	[0.1 °C ×10]
40007	Room Air Temp. Circuit 2	[0.1 °C ×10]
40008	Shift value(Target) in auto mode Circuit 2	1K
40009	DHW Target temp.	[0.1 °C ×10]
40010	Energy state input	0 : Not Use 1 : Forced off (Equal to TB_SG1=close / TB_SG2=open) 2 : Normal operation (Equal to TB_SG1=open / TB_SG2=open) 3 : On-recommendation (Equal to TB_SG1=open / TB_SG2=close) 4 : On-command (Equal to TB_SG1=close / TB_SG2=close) 5 : On-command step 2 (++ Energy Consumption compared to Normal) 6 : On-recommendation Step 1 (+ Energy Consumption compared to Normal) 7 : Energy Saving mode (- Energy Consumption compared to Normal) 8 : Super Energy saving mode (-- Energy Consumption compared to Normal)
40024	Compressor Modulation	0 : Not Used / 40~100 : Compressor Modulation The new maximum frequency of the compressor is determined by the compressor modulation value and the maximum compressor frequency of the existing product. i.e) Maximum compressor frequency: 100Hz Compressor modulation value: 0.4 → New maximum frequency of the compressor: 100 * 0.4 = 40 Hz
40025	Power Limitation value	0.1 kW ~ 25.0 kW

Connectivity - CN_EXT

Instead of external Dry contact, CN-EXT can be used to lock the heat pump by external signals.

Setting	Contact input	Operation *	Remark
Not use	-	-	CN_EXT is not used
Simple operation	Open	Operation "Off"	In case of simple operation, operation on/off is possible as per either the remote controller or external input signal.
	Close	Operation "On"	
Simple Dry contact	Open	Operation "Off" with dry contact lock	In this case, "Operation on" is possible only with the Central controller.
	Close	Lock released	Release dry contact lock setting and "operation on" is possible depend on dry contact auto setting Follows setting 'Dry contact mode': Auto = Contact closed → Operation on Manual = Contact closed → Keep on "operation off" state, but "operation on" is possible by remote controller manually
Single Emergency stop	Open	Emergency stop with forced lock	In this case, "Operation on" is impossible with any other controller.
	Close	Forced lock released	Release forced lock and keep on "operation off" state, but "operation on" is possible by remote controller manually Priority: Emergency stop lock > Central control lock > Dry contact lock

* This operation on / off means remote controller of / off for heating & cooling.

Connectivity - 3rd party boiler

Either the heat pump or the boiler is used for space heating (Bivalent-alternative operation)

Two different modes are available to switch-over between heat pump and boiler:

- Manual: The boiler is activated and de-activated by User setting 'Function/3rd party boiler'.
- Auto: The boiler output is activated based on outdoor temperature.

The bivalent temperature (Default: -7 °C) and the switch-over hysteresis (Default: 4 K) can be adjusted by setting.

NOTE

Prices for electricity and fuel, as well as the maximum capacity of the heat pump must be considered when changing the Bivalent temp.

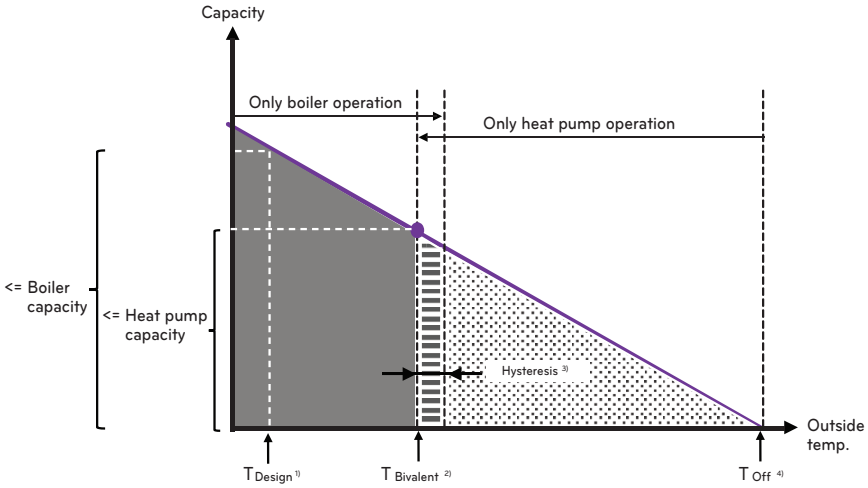

1) Seasonal auto temp/Outdoor temp/O1
2) Connectivity/3rd party boiler/Temp
3) Connectivity/3rd party boiler/Hysteresis
4) Seasonal auto temp/Outdoor temp/O2

Connectivity - Energy state

The sub menu 'Energy state' can be used to influence the heat pumps's operation based on availability of renewable energy - for instance from PV-panels.

There are two options to make use of this logic:

- Use Modbus: LG Energy Storage System (ESS) or another third-party device is connected by Modbus serial line.
- Use Digital inputs: A third-party controller (e.g. SmartHome controller or PV inverter) is connected through 230 V inputs ("SG-Ready contacts").

Using Modbus RTU allows to use eight different energy states, while Digital inputs provides four different energy states.

Digital inputs (TB_SG)		Energy state	Mode	Default	Range
ES1	ES2				
Close	Open	1	Heating	Off	Fixed
			Cooling	Off	Fixed
			DHW	Off	Fixed
Open	Open	2	Heating	Normal	Fixed
			Cooling	Normal	Fixed
			DHW	Normal	Fixed
Open	Close	3	Heating	2	Fixed
			Cooling	+/- 0	Fixed
			DHW	5	Fixed
Close	Close	4	Heating	+/- 0	Fixed
			Cooling	+/- 0	Fixed
			DHW	Target: 80°C	Fixed
-	-	5	Heating	5	0 ~ +30
			Cooling	-5	-30 ~ 0
			DHW	30	0 ~ +50
-	-	6	Heating	2	0 ~ +30
			Cooling	-2	-30 ~ 0
			DHW	10	0 ~ +50
-	-	7	Heating	-2	-30 ~ 0
			Cooling	2	0 ~ +30
			DHW	+/- 0	-50 ~ 0
-	-	8	Heating	-5	-30 ~ 0
			Cooling	5	0 ~ +30
			DHW	+/- 0	-50 ~ 0

NOTE

Use setting 'Digital inputs assignment' to replace Energy state 3 and/or 4 with any of Energy states 3~8.

COMMISSIONING

Before starting operation, pre-check points are described in this chapter. Some comments about maintenance and how to do troubleshooting are presented.

Check List before Starting Operation

⚠ CAUTION

Turn off the power before changing wiring or handling product.

No	Category	Item	Check Point
1	Electricity	Field wiring	• All switches having contacts for different poles should be wired tightly according to regional or national legislation. • Only qualified person can proceed wiring. • Wiring and local-supplied electric parts should be complied with European and regional regulations. • Wiring should be following the wiring diagram supplied with the product.
2		Protective devices	• Install ELB (earth leakage breaker) with 30 mA residual current. • ELB of Backup heater located inside of Hydro unit should be turned on before starting operation.
3		Earth wiring	• Earth should be connected. Do not earth to gas or city water pipe, metallic section of a building, surge absorber, etc.
4		Power supply	• Use dedicated power line.
5		Terminal block wiring	• Connections on the terminal block (inside the control box of the unit) should be tightened.
6	Water	Charged water pressure	• After water charging, the pressure gauge (in front of the unit) should indicate 2.0~2.5 bar. Do not exceed 3.0 bar.
7		Air purge	• During water charging, air should be vented through air purges until water is spilling out. After all air is released, check to close all air vents tightly. There should be no noise caused by circulating air bubbles in any part of the system.
8		Shut-off valve	• Two shut-off valves (Field supply) - located at the end of water inlet pipe and water outlet pipe of the unit) should be open.
9		By-pass valve	• A device that ensures the minimum flow rate (e.g. Bypass valve, hydronic separator, buffer tank) should be installed and adjusted to secure enough water flow rate. If water flow rate is low, flow switch error (CH14) can occur.
10	Product Installation	Hang to the wall	• As the unit is hung on the wall, vibration or noise can be heard if the unit is not fixed tightly. • If the unit is not fixed tightly, it can fall down during operation.
11		Parts inspection	• There should be no apparently damaged parts inside the unit.
12		Refrigerant leakage	• Refrigerant leakage is a serious danger. If leakage found, contact qualified LG air conditioning installation person.
13		Drainage treatment	• While cooling operation, condensed dew can drop down to the bottom of the unit. In this case, prepare drainage treatment (for example, vessel to contain condensed dew) to avoid water drop.

To assure best performance of **Therma V™**, it is required to perform periodical check and maintenance. It is recommended to proceed following check list for once a year.

⚠ CAUTION

Turn off the power before proceeding maintenance.

No	Category	Item	Check Point
1	Water	Water pressure	• In normal state, the pressure gauge (in front of the unit) should indicate 2.0~2.5 bar. • If the pressure is less than 0.3 bar, please recharge the water.
2		Strainer (Water filter)	• Close the shut-off valves and disassemble strainer. Then wash the strainer to make it clean. • While disassembling the strainer, be careful for water flood out.
3		Safety valve	• Open the switch of the safety valve and check if water is flood out through the drain hose. • After checking, close the safety valve.
4	Electricity	Terminal block wiring	• Look and inspect if there is loosen or defected connection on the terminal block.

Starting Operation

Check before Starting Operation

- Check to see whether there is any refrigerant leakage, and check whether the power or transmission cable is connected properly.
- Confirm that 500 V megger shows 2.0 MΩ or more between power supply terminal block and ground. Do not operate in the case of 2.0 MΩ or less.

NOTE

Never carry out mega ohm check over terminal control board.
Otherwise the control board may break.

Immediately after mounting the unit or after leaving it turned off for an extended length of time, the resistance of the insulation between the power supply terminal board and the ground may decrease to approx. 2.0 MΩ as a result of refrigerant accumulation in the internal compressor.

If the insulation resistance is less than 2.0 MΩ, turn on the main power supply.

- When the power is applied for the first time, operate the product after preheating for 6 hours. To protect the unit by increasing the oil temperature of the compressor.

Starting Operation flow chart

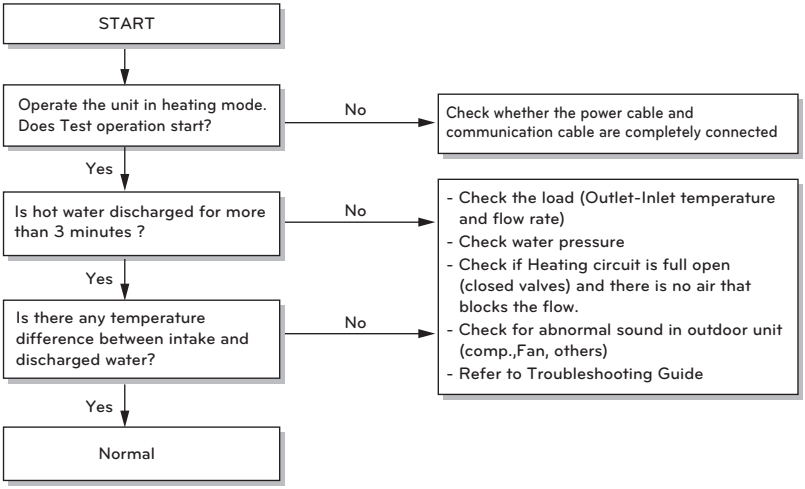

Trouble shooting

If **Therma V™** operates not properly or it does not start operation, please check following list.

⚠ CAUTION

Turn off the power before proceeding troubleshooting.

		Critical trouble / Error	Heavy trouble	Slight trouble	Option trouble
Description		Problem which can stop system operation, and can be resumed only after certificated professional's check.	Compressor cycle trouble. Emergency mode operation is performed by optional electric heater.	In most case, this trouble is concerned with sensor problems.	A problem is found for Option operation such as water tank heating.
Priority [1]		1	2	3	4
Availability of Emergency mode	Heat pump cycle	X	X	O	O [2]
	Backup heater	X	O [3]	O	O [2]
Related error codes (cascade control unit)		03, 09, 15, 16, 20	-	01, 02, 17, 18, 19, 234	08,13,233
Related error codes (outdoor unit) [4]		10, 14, 21, 22, 23, 24, 26, 27, 29, 32, 35, 41, 42, 43, 44, 45, 46, 48, 52, 53, 54, 60, 61, 62, 65, 67, 114, 115, 117, 145, 231, 232, 237			

1) If more than one trouble occurs ("Duplicated trouble"), the trouble with higher priority defines the consequences (whether Emergency operation is possible or not).

2) Operation possible without optional function that has trouble. For instance, when DHW sensor is broken (CH08), hot water heating is not available.

3) Heating operation only. Not possible to use Cooling function.

4) If the percentage of outdoor units with errors exceeds the system allowance, the cascade control unit determines that there is "heavy trouble" and shuts down all outdoor units.

※ If CH35 occurs from the outdoor unit, the cascade control unit shuts down all outdoor units regardless of system allowance.

NOTE

- Emergency mode operation is activated by pressing OK button on popup-window!
- After power reset, Emergency mode does NOT automatically resume!

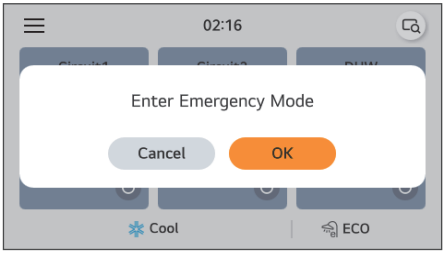

Troubleshooting for Problem while Operation

Problem	Reason	Solution
Heating or Cooling is not satisfactory.	• Setting target temperature is not proper.	• Set target temperature correctly. • Check if temperature is water-based or air-based. See 'Remote sensor active' and 'Temp. sensor selection'
	• Charged water is not enough.	• Check pressure gauge and charge more water until pressure gauge is indication 2~2.5 Bar
	• Water flow rate is low.	• Check if strainer gathers too much particles. If so, strainer should be cleaned. • Check if pressure gauge indicates above 4 Bar • Check if water pipe is getting closed due to stacked particles or lime.
Although electric power supply is OK (remote controller displays information), the unit does not start working.	• Water inlet temperature is too high.	• If water inlet temperature is above 57 °C, the unit does not operated for the sake of system protection
	• Water inlet temperature is too low.	• If water inlet temperature is below 5 °C in cooling operation, the unit does not operated for the sake of system protection. Wait while unit warms up the water inlet temperature. • If water inlet temperature is below 15 °C in heating operation, the unit does not operated for the sake of system protection. Wait while unit warms up to 18 °C the water inlet temperature. • If you are not using the back up heater accessory (HA**1M E1), increase the water temperature with the external heat source (heater, boiler). If the problem persists, contact your dealer. • If you want to use the screed drying function, be sure to purchase and install back up hater accessories (HA**1M E1).
Water pump noise.	• Air purging is not completely finished.	• Open the cap of air purge and charge more water until pressure gauge is indicating 2~2.5 Bar • If water does not splash out when the tip(at the top of the hole) is pressed, then air purging is not completed yet. If well purged, the water will splash out like fountain.
	• Water pressure is low.	• Check if pressure gauge indicates above 0.3 Bar. • Check if the expansion tank and pressure gauge operates well.
Water is flood out through drain hose.	• Too much water is charged.	• Flood out water by opening the switch of the safety valve until pressure gauge is indicating 2~2.5 Bar.
	• Expansion tank is damaged.	• Replace the expansion tank.
DHW is not hot.	• Thermal protector of water tank heater is activated.	• Open the side panel of the DHW tank and push the reset button of the thermal protector. (for more detail information, please refer to installation manual of DHW tank.
	• DHW Heating is disabled.	• Select DHW Heating Operation and identify if icon is displayed on the remote controller.

Troubleshooting for Error Code

Error code	Title	Cause of error	Check point
1	Room air temp. sensor is broken	• Incorrect connection between sensor and PCB • PCB fault • Sensor fault	• Resistance*: 10 kΩ at 25°C (unplugged) • Voltage: 2.5 VDC at 25°C (plugged)
2	Refrigerant gas temperature sensor broken		• Resistance*: 5 kΩ at 25°C (unplugged) • Voltage: 2.5 VDC at 25°C (plugged)
3	Correspondence error (Indoor-PCB ↔ Remote control)	• Communication line is broken • RMC is broken or has wrong software • IDU-PCB is abnormal	• Check condition and polarity of wire between Remote controller and Indoor-PCB
8	DHW tank sensor broken	• Incorrect connection between sensor and PCB • PCB fault • Sensor fault	• Resistance*: 5 kΩ at 25°C (unplugged) • Voltage: 2.5 VDC at 25°C (plugged)
9	EEPROM error	• Electrical or mechanical damage of EEPROM (Indoor-PCB)	• Request support from LG
10	BLDC water pump lock	• Trouble with BLDC-type water pump	• BLDC water pump defect • Wrong connection or damage of driver cable
13	Solar thermal sensor is broken	• Incorrect connection between sensor and PCB • PCB fault • Sensor fault	• Resistance*: 5 kΩ at 25°C (unplugged) • Voltage: 2.5 VDC at 25°C (plugged)
14	Flows Switch/Flow sensor error	• Flow rate <= Minimum flow for at least 15 seconds while water pump is in operation. Minimum flow rate : (5,7,9 kW) 5 LPM (12,14,16 kW) 10 LPM	• Check the actual flow rate in the remote controller (Monitoring screen) • Make sure there is no water leakage / low pressure • Make sure the strainer or water pipe is not clogged and valves are open. • Make sure all air is released from heating circuit (!) • Check the condition of internal water circulation pump • Check installation of external pump (if needed) • Check the flow sensor itself
15	Water pipe abnormal overheat	• Abnormal operation of Backup heater • Leaving water temperature > 75°C	• External heat source not de-coupled from heat pump • Problem with Backup heater

Error code	Title	Cause of error	Check point
16	AWHP temperature sensor at once error	• More than one sensor shows invalid data	• Sensors mixed up or multiple damages
17	PHEX inlet temp. sensor Error	• Incorrect connection between sensor and PCB • PCB fault • Sensor fault	• Resistance*: 5 kΩ at 25°C (unplugged) • Voltage: 2.5 VDC at 25°C (plugged)
18	PHEX outlet temp. sensor Error		
19	Unit (Electric heater) outlet temp. sensor Error		
20	Backup heater/Thermal fuse	• Abnormal overheat (>= 80°C) of internal Backup heater	• Mechanical fault at thermal fuse • Wire damaged
21	DC Peak (IPM Fault)	• Instant over current • Over Rated current • Poor insulation of IPM	• An instant over-current in the U,V,W phase - Comp lock - Abnormal connection of U,V,W • Over load condition - Overcharging of refrigerant - Pipe length/diameter - Outdoor fan locked • Poor insulation of compressor
22	CT 2 (Max CT)	• Input over-current	• Malfunction of compressor • Blocking of pipe • Low voltage input • Refrigerant, Pipe length, Blockage...
23	DC Link Voltage is low or high	• DC Link Voltage is above 420 V DC • DC Link Voltage is below 140 V DC	• Check CN_(L), CN_(N) Connection • Check Input Voltage • Check PCB DC Link voltage sensor parts
24	High Pressure Switch Perception Error	• High pressure is above 34~36 kgf/cm^2 • Pressure switch is self-defective	• Check the high pressure • Check the connection of harness
26	DC Compressor positioning	• Compressor starting fail error	• Check the connection of comp wire "U,V,W" • Malfunction of compressor • Check the component of "IPM", detection parts.

Error code	Title	Cause of error	Check point
27	AC input instant over-current	• PCB(Inverter) input current is over100 A(peak) for 2 us	• Overload operation (Pipe clogging/Covering/EEV defect/Ref. overcharge) • Compressor damage (Insulation damage/Motor damage) • Input voltage abnormal (L,N) • Powerline assemble condition abnormal • ODU-PCB (Assembly 1) damage (input current sensing part)
29	Inverter compressor over-current	• (HM**1M U*3) INV input current >= 30 A. • (HM**3M U*3) INV input current >= 24 A.	• Overload operation (Pipe clogging/Covering/EEV defect/Ref. overcharge) • Compressor damage (Insulation damage/Motor damage) • Input voltage low • ODU-PCB (Assembly 1) damage
32	Temperature at discharge-pipe is too high	• Overload operation (Outdoor fan constraint, screened, blocked) • Refrigerant leakage or insufficient charge • INV Comp. discharge sensor failure • LEV connector displaced/poor • LEV assembly	• Check outdoor fan constraint/ screened/ flow structure • Check refrigerant leakage • Check if the sensor is normal • Check the status of EEV assembly
35	Low Pressure error	• Excessive decrease of low pressure	• Defective low pressure sensor • Defective fan (motor) • Refrigerant shortage/leakage • Deformation of refrigerant pipe • Defective EEV • Outdoor-HEX blocked • SVC valve clogging • Defective PCB(Inverter) • Defective Pipe sensor
41	Problem in discharge-pipe temperature sensor	• Open / Short • Soldered poorly • Internal circuit error	• Bad connection of thermistor connector • Defect of thermistor connector (Open/Short) • Defect of outdoor PCB(Inverter)
42	(Low-)pressure sensor (Open/Short)	• Abnormal value of sensor(Open/Short)	• Bad connection of connector PCB • Bad connection Low pressure connector • Defect of Low pressure connector (Open/Short) • Defect of connector PCB (Open/Short) • Defect of PCB

Error code	Title	Cause of error	Check point
43	(High-)pressure sensor (Open/Short)	• Abnormal value of sensor (Open/Short)	• Bad connection of connector PCB(Inverter) • Bad connection high pressure connector • Defect of high pressure connector (Open/Short) • Defect of connector PCB(Inverter) (Open/Short) • Defect of PCB(Inverter)
44	Problem in AIR temperature sensor	• Open / Short • Soldered poorly • Internal circuit error	• Bad connection of thermistor connector • Defect of thermistor connector (Open/Short) • Defect of outdoor PCB(Inverter)
45	Problem in condenser-middle-pipe temperature sensor	• Open / Short • Soldered poorly • Internal circuit error	• Bad connection of thermistor connector • Defect of thermistor connector (Open/Short) • Defect of outdoor PCB(Inverter)
46	Problem in suction-pipe temperature sensor	• Open / Short • Soldered poorly • Internal circuit error	• Bad connection of thermistor connector • Defect of thermistor connector (Open/Short) • Defect of outdoor PCB(Inverter)
48	Problem in condenser out pipe temperature sensor	• Open / Short • Soldered poorly • Internal circuit error	• Bad connection of thermistor connector • Defect of thermistor connector (Open/Short) • Defect of outdoor PCB
52	Correspondence Error (Inverter-PCB ↔ Outdoor-PCB)	• Communication line between Outdoor-PCB and Inverter-PCB is broken • Inverter-PCB is damaged	• Generation of noise source interfering with communication • Checking the communication state between Outdoor-PCB and Inverter-PCB
53	Correspondence Error (Outdoor-PCB ↔ Indoor-PCB)	• Communication line between Outdoor-PCB and Indoor-PCB is broken • Indoor-PCB is damaged	• Check condition and polarity of wire between Outdoor- and Indoor-PCB • Check internal wiring between terminal blocks and PCB • Check software versions of Outdoor- and Indoor-PCB
54	Phase sequence incorrect	• Prevention of phase unbalance and prevention of reverse rotation of constant-rate compressor	• Main power wiring fault

Error code	Title	Cause of error	Check point
60	EEPROM Checksum mismatched	• EEPROM Access error and Check SUM error	• EEPROM contact defect/wrong insertion • Different EEPROM Version • ODU Inverter & Main PCB (Assembly 1) damage
61	Temperature at condenser-pipe is too high	• Overload operation (Outdoor fan constraint, screened, blocked) • Unit heat exchanger contaminated • EEV connector displaced / poor EEV assembly • Poor Cond. Pipe sensor assembly / burned	• Check outdoor fan constraint / screened / flow structure • Check if refrigerant overcharged • Check the status of EEV assembly • Check the status of sensor assembly / burn
62	Temperature at heatsink is too high	• Heat sink sensor detected high temp.(85 °C)	• Part no. : EBR37798101~09: - Check the heat sink sensor: 10 kΩ / at 25 °C(Unplugged) - Check the outdoor fan is driving rightly • Part no. : EBR37798112~21: - Check the soldered condition in the 22,23 pin of IPM, PFCM - Check the screw torque of IPM, PFCM - Check the spreadable condition of thermal grease on IPM, PFCM - Check the outdoor fan is driving rightly
65	Problem in heatsink temperature sensor	• Abnormal value of sensor(Open/Short)	• Check if there is defect of thermistor connector (Open/Short) • Check defect of outdoor PCB
67	ODU BLDC fan lock	• Fan rotation speed < 10 rpm for 5 seconds during start-up operation or < 40 rpm in normal operation	• Fan motor damage. • Assembly condition abnormal. • Jammed fan by surroundings.
114	Injection EEV temp. sensor is broken	• Open (Below -48.7 °C)/ Short(Over 96.2 °C) Soldered poorly Internal circuit error	• Bad connection of thermistor connector • Defect of thermistor connector (Open/Short) • Defect of outdoor PCB
115	Problem in Injection EEV outlet temp. sensor	• Open (Below -48.7 °C) / Short(Over 96.2 °C) • Soldered poorly • Internal circuit error	• Bad connection of thermistor connector • Defect of thermistor connector (Open/Short) • Defect of outdoor PCB

Error code	Title	Cause of error	Check point
117	Problem in condenser-in-pipe temperature sensor	• Open / Short • Soldered poorly • Internal circuit error	• Bad connection of thermistor connector • Defect of thermistor connector (Open/Short) • Defect of outdoor PCB
145.	Communication error (Main PCB ↔ Sub PCB)	• Communication line is broken • Main PCB is broken or has wrong software • Sub PCB is broken or has wrong software	• Check condition and polarity of wire between Main PCB and Sub PCB
231	Water pressure sensor problem	• Incorrect connection between sensor and PCB • PCB fault • Sensor fault	• Check the actual water pressure value shown on the remote controller. • Voltage : 0.65 V at 1.0 bar (plugged) • Refer to voltage-pressure table to check at different pressure.
232	Water flow sensor problem	• Incorrect connection between sensor and PCB • PCB fault • Sensor fault	• Check the actual water flow rate shown on the remote controller • Voltage : 1.22 V at 23 LPM (plugged) • Refer to voltage-flow table to check at different flow rates
233	Problem in Solar hot water tank temperature sensor	• Open / Short • Soldered poorly • Internal circuit error	• Bad connection of thermistor connector • Defect of thermistor connector (Open/Short) • Defect of indoor PCB
234	Problem in Ambient temperature sensor	• Open / Short • Soldered poorly • Internal circuit error	• Bad connection of thermistor connector • Defect of thermistor connector (Open/Short) • Defect of indoor PCB
237	Communication modem Error in indoor unit with Flat communication method *RS-485(EIA-485)	• Communication line between outdoor and indoor unit is broken • Outdoor-PCB is damaged • Software setup is not compatible • Communication method is mismatching. (AC method in outdoor unit ↔ Flat method in indoor unit)	• Check condition and polarity of wire between Outdoor- and Indoor-PCB • Check internal wiring between terminal blocks and PCB • Check software versions of Outdoor and Indoor-PCB

How to set emergency independent operation of outdoor units

Emergency independent operation is that outdoor unit operates itself without the control of the cascade control unit.

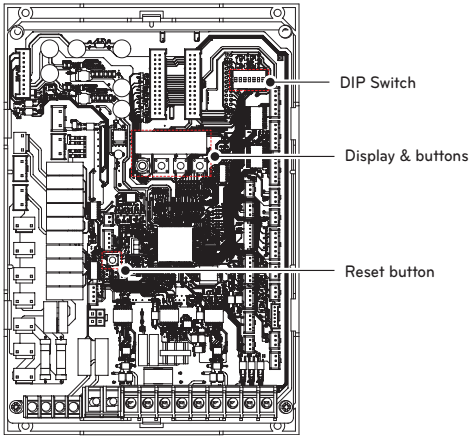

Step 1. Set DIP switch No. 7 to "ON" to set outdoor unit's emergency independent operation.

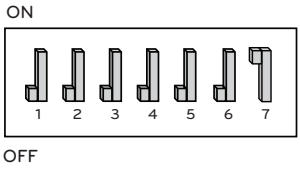

NOTE

The default setting of DIP switch is all OFF from 1 to 7.

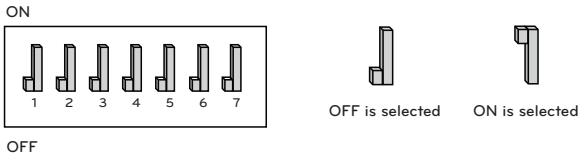

⚠ CAUTION

Turn off electric power supply before setting DIP switch

- Whenever adjusting DIP switch, turn off electric power supply to avoid electric shock.

Step 2. Turn on electric power supply. After supplying power, the display will light up.

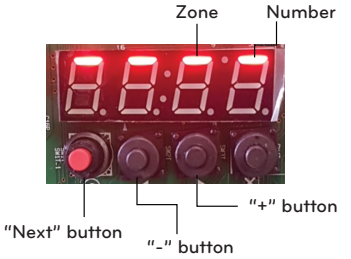

Step 3. Set the number using "◀" , "▶" button. If you complete to set the number, press "◎" button.

※ The number means the desired outlet water temperature of the outdoor unit. Please refer to the table below.

Number	Operation mode	Desired outlet water temperature
1	Heating	35
2		45
3		55
4		65
5		75

Step 4. If you want to stop emergency independent operation, set the number to 0 and press "◎" button. And turn off electric power supply and set DIP switch No. 7 to "OFF".

ANNEX

NOTE

The sensor resistance value and the voltage value at both ends may vary depending on the ambient temperature and the value has a deviation of 5 %.
There may be some errors depending on the measurement equipment.

Room air temperature sensors (NTC 10kOhm)

Indoor Temp.(°C)	Resistance(kΩ)	Voltage(V)
-10 °C	60 kΩ	4.1 V
-5 °C	44 kΩ	3.9 V
0 °C	33 kΩ	3.6 V
5 °C	25 kΩ	3.4 V
10 °C	0 kΩ	3.1 V
15 °C	15 kΩ	2.8 V
20 °C	12 kΩ	2.5 V
25 °C	10 kΩ	2.2 V
30 °C	8 kΩ	1.9 V
35 °C	6 kΩ	1.6 V
40 °C	5 kΩ	1.5 V
45 °C	4 kΩ	1.3 V

Pipe temperature sensors (NTC 5 kOhm)

Indoor Temp.(°C)	Resistance(kΩ)	Voltage(V)
-10 °C	29 kΩ	4.1 V
-5 °C	22 kΩ	3.9 V
0 °C	17 kΩ	3.6 V
5 °C	13 kΩ	3.3 V
10 °C	10 kΩ	3 V
15 °C	8 kΩ	2.8 V
20 °C	6 kΩ	2.5 V
25 °C	5 kΩ	2.2 V
30 °C	4 kΩ	1.9 V
35 °C	3.2 kΩ	1.7 V
40 °C	2.6 kΩ	1.5 V
45 °C	2.1 kΩ	1.2 V
50 °C	1.7 kΩ	1 V
55 °C	1.4 kΩ	0.9 V
60 °C	1.2 kΩ	0.8 V
65 °C	1 kΩ	0.7 V

Flow sensor

Flow(l/min)	Voltage(V)
5.0	0.50
10.0	0.70
15.0	0.90
20.0	1.10
25.0	1.30
30.0	1.50
35.0	1.70
40.0	1.90
45.0	2.10
50.0	2.30
55.0	2.50
60.0	2.70
65.0	2.90
70.0	3.10
75.0	3.30
80.0	3.50

Water pressure sensor

Pressure (bar)	Voltage(V)
0.2	0.53
0.4	0.56
0.6	0.59
0.8	0.62
1.0	0.65
1.2	0.68
1.4	0.71
1.6	0.74
1.8	0.77
2.0	0.80
2.2	0.83
2.4	0.86
2.6	0.89
2.8	0.92
3.0	0.95

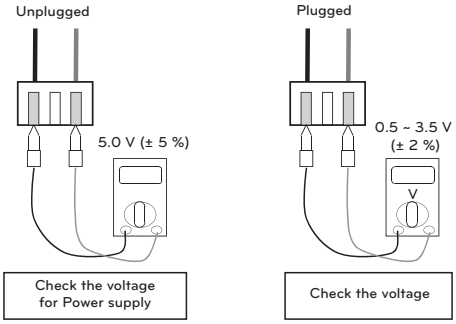

NOTE

Supply voltage of 5VDC must be supplied between Pins 1 (brown) and 3 (blue).
Measure voltage between Pins 2 (white) and 3 (blue) and compare with chart above.



Factory :
LG Electronics Inc.
84, Wanam-ro, Seongsan-gu, Changwon-si, Gyeongsangnam-do, KOREA

LG Electronics Tianjin Appliances Co.,Ltd.
No. 9 Jin Wei Road, Bei Chen District, Tianjin, 300402, P.R. China

LG Electronics Wroclaw Sp. z o.o
ul. LG Electronics 1-2, Biskupice Podgórne, 55-040 Kobierzyce, Poland

UK Importer :
LG Electronics U.K. Ltd
Velocity 2, Brooklands Drive, Weybridge, KT13 0SL

Eco design requirement
The information for Eco design is available on the following free access website.
https://www.lg.com/global/support/cedoc/cedoc