LG

100MRGB96B*

MFL05813216260 2REV00

https://www.lg.com/global/qned/100qned85/howtoinstall

https://www.lg.com/ca_fr/tvs/100qned85-how-to-videos-french/





www.lg.com

PDF

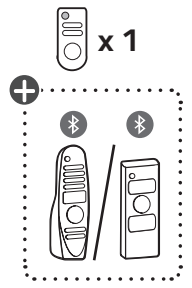



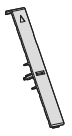

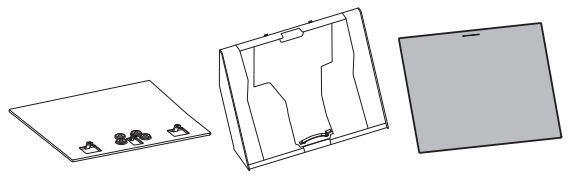

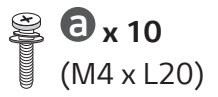

1

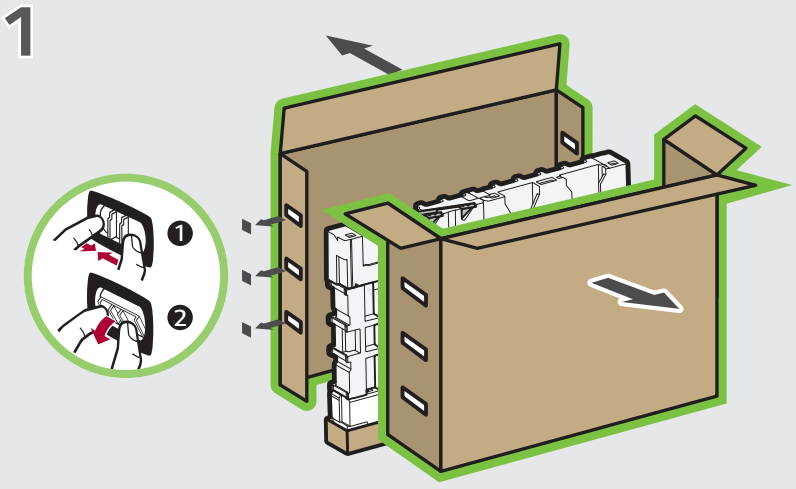

2

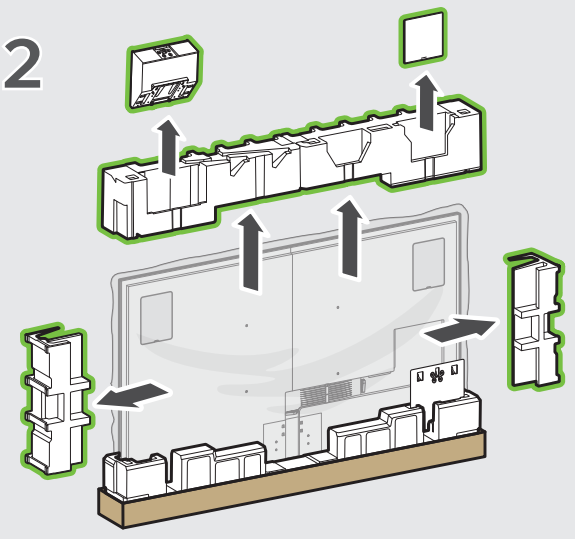

3

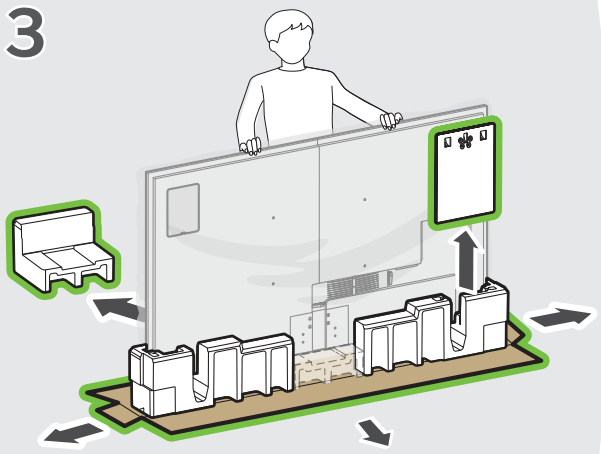

4

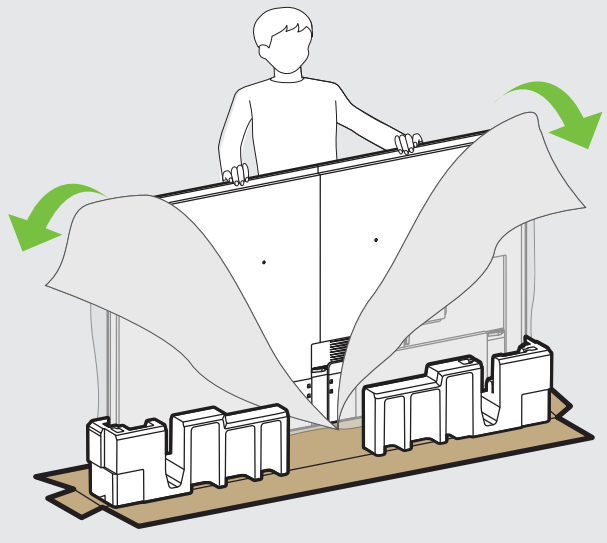



5

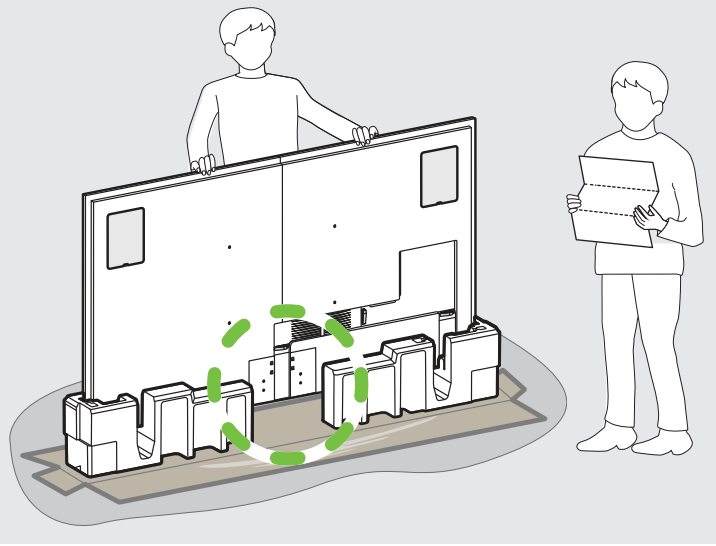

1

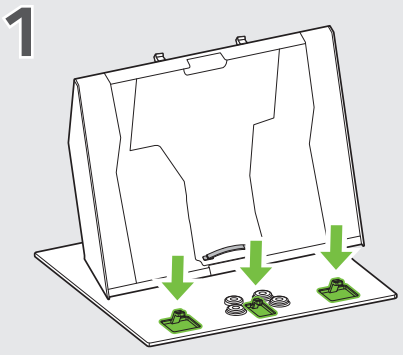

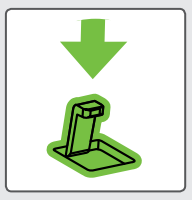

2

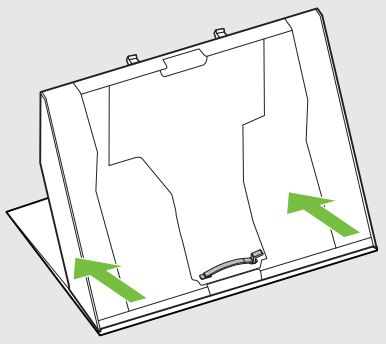

3

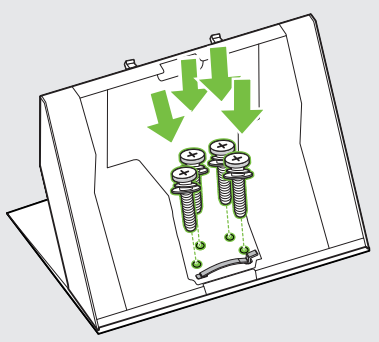

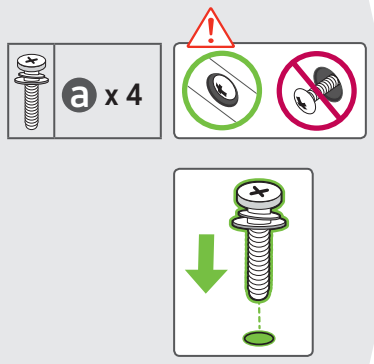

4

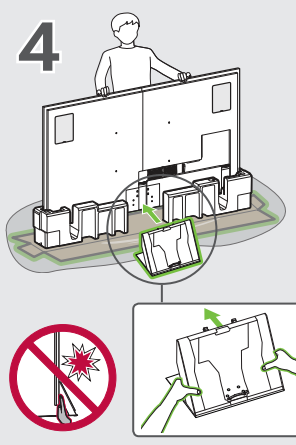

95 mm
(3.7) inches

F

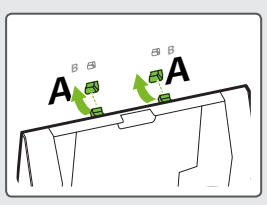

47 mm
(1.8) inches

F'

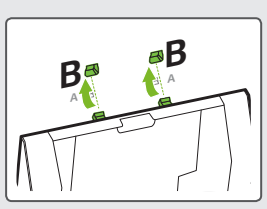

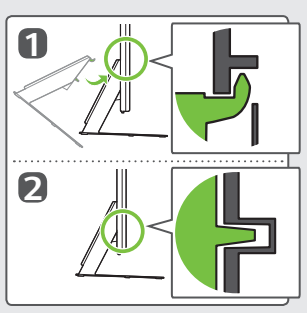

5

95 mm
(3.7) inches

F

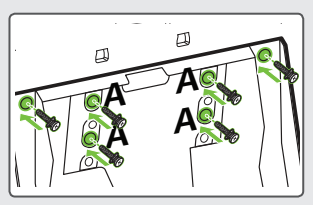

47 mm
(1.8) inches

F'

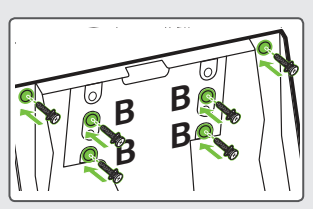

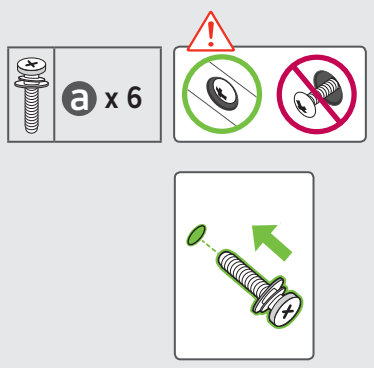

6

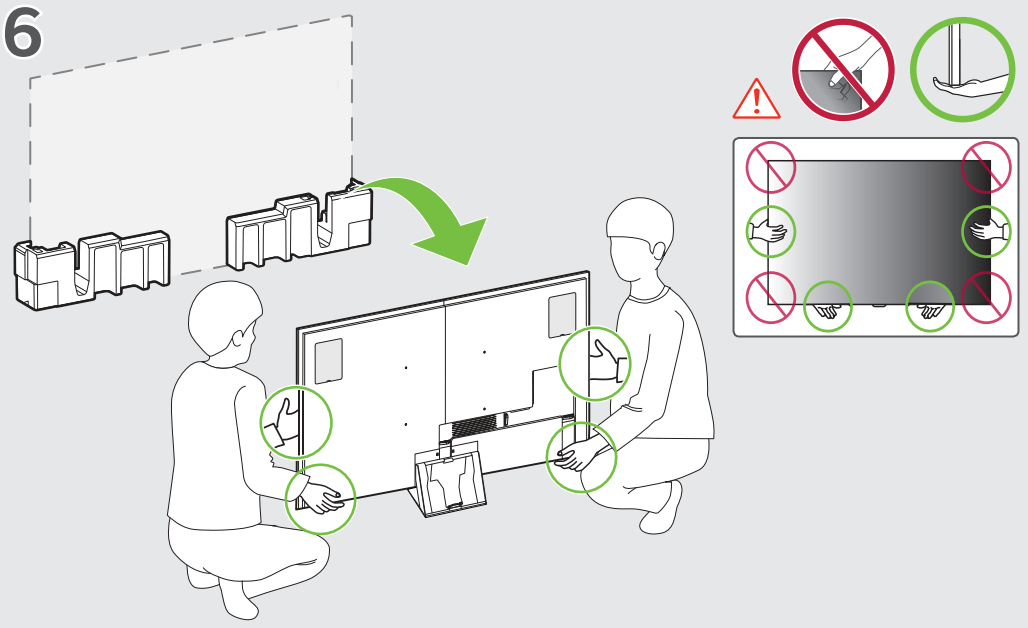

7

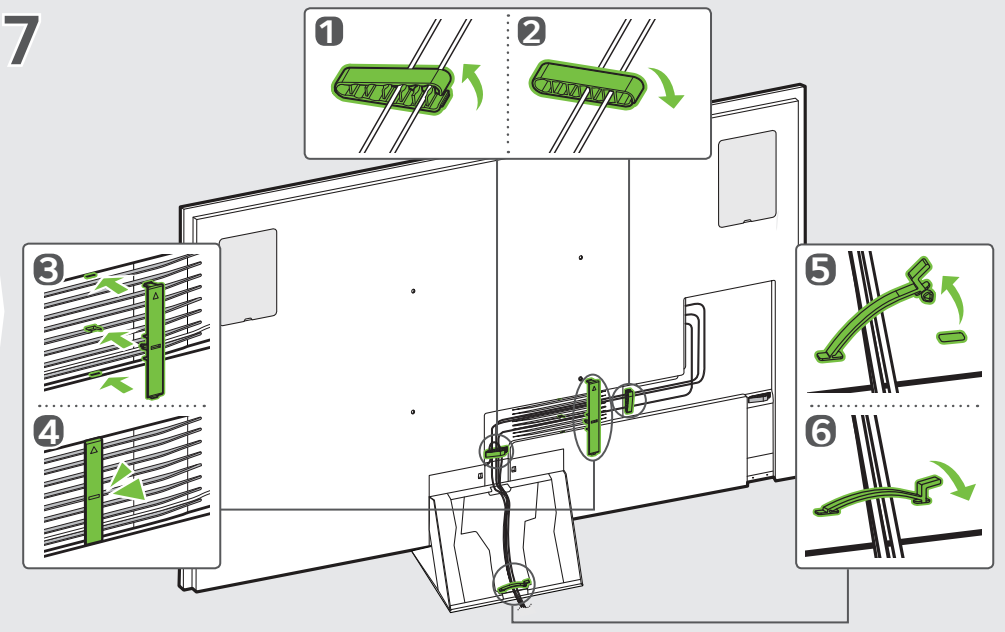

8

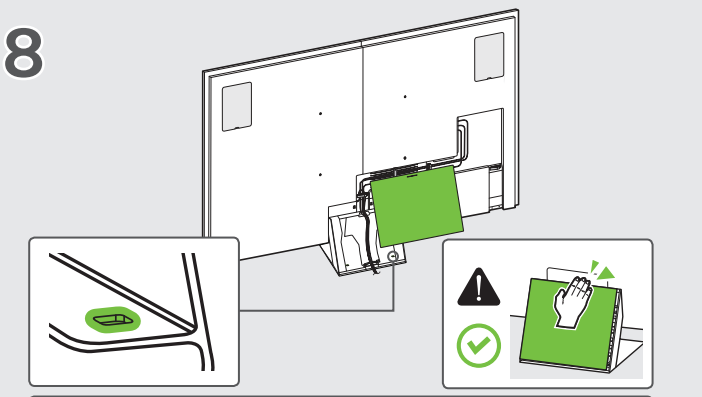

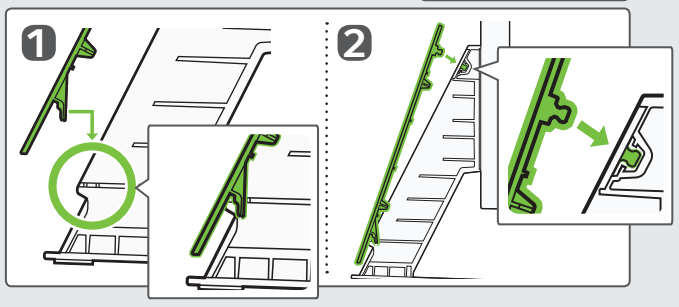

9

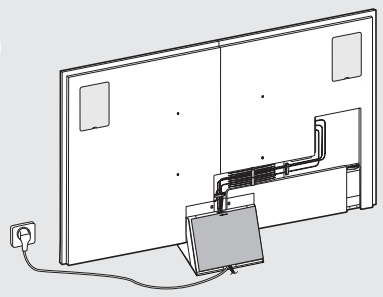



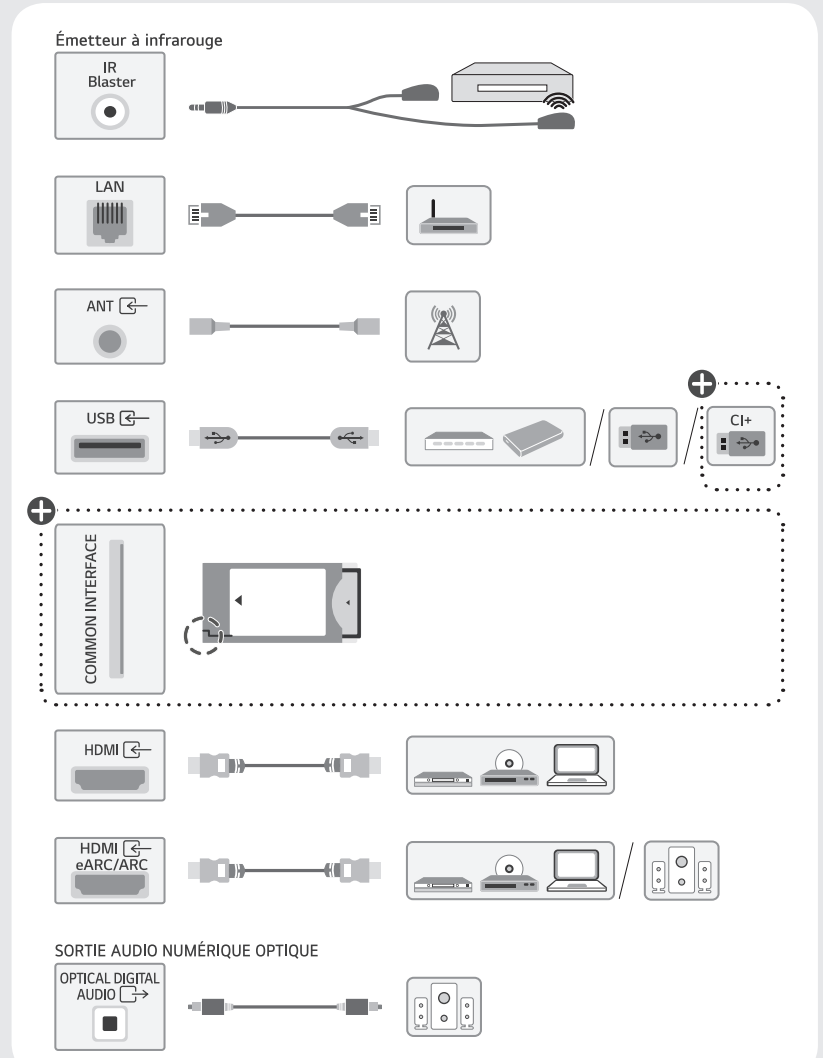

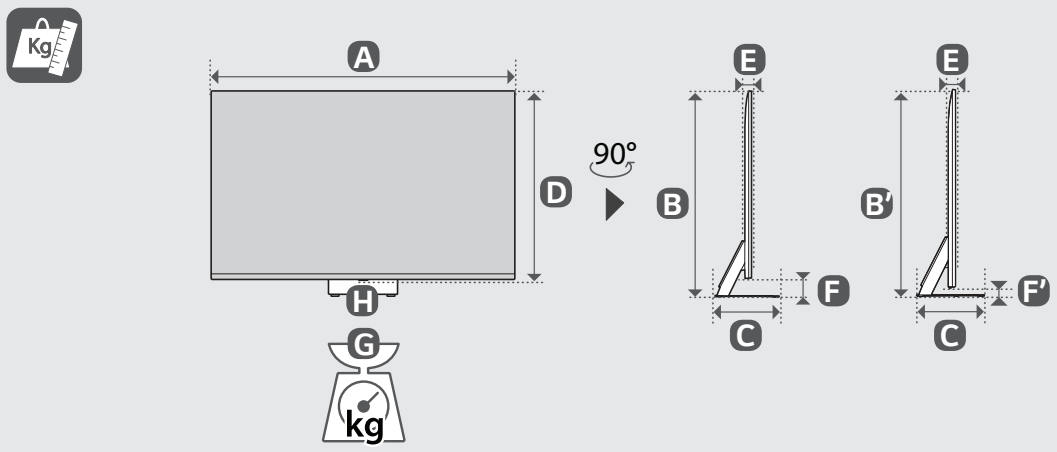

	mm (inches / pulgadas / po / pol.)						kg (lbs / libras / lb)	
	A	B/B'	C	D	E	F/F'	G	G - H
100MRGB96B*	2 230 (87.7)	1 372 (54.0) / 1 324 (52.1)	434 (17.0)	1 277 (50.2)	49.9 (1.9)	95 (3.7) / 47 (1.8)	77.0 (169.7)	67.3 (148.3)

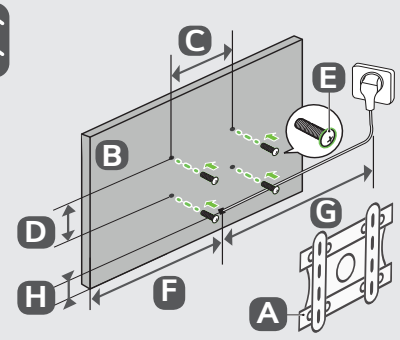

mm (inches / pulgadas / po / pol.)

A	B	C x D mm x mm	E	F mm	G m	H mm
WB24GDB	100MRGB96B*	600 x 400 (23.6 x 15.7)	M8	1 070 (42.1)	≧ 1.5 (59.0) inches	232 (9.1)

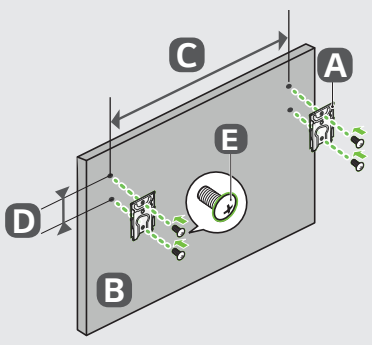

mm (inches / pulgadas / po / pol.)

A	B	C x D mm x mm	E
WB22E97GB	100MRGB96B*	1 847.6 x 226 (72.7 x 8.8)	M8

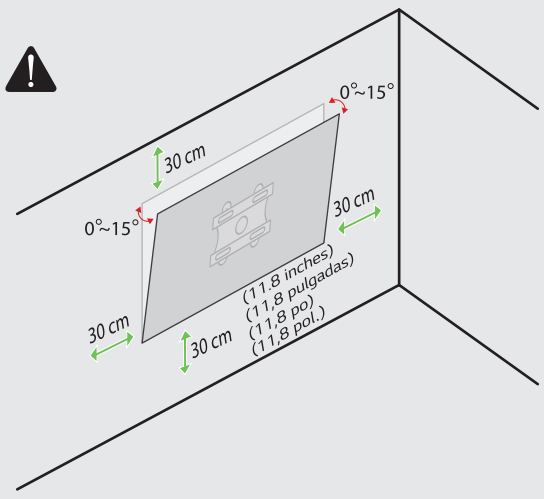

* : 0~9, A~Z

Printed in Korea

Imprimé en Corée