LG
Life's Good

OWNER'S MANUAL

MEDICAL MONITOR

Please read this manual carefully before operating your set and retain it for future reference.

27HJ710S

www.lg.com

Copyright © 2019 LG Electronics Inc. All Rights Reserved.

TABLE OF CONTENTS

LICENSE ---------- 3

PRODUCT SPECIFICATIONS --------- 4

ON CLEANING ---------- 6

ASSEMBLY AND PREPARING-------- 7

SETTINGS ---------- 16

TROUBLESHOOTING ---------- 28

PRODUCT SPECIFICATIONS -------- 30

EXTERNAL CONTROLLER SETUP -- 33

LICENSE

Each model has different licenses. Visit *www.lg.com* for more information on the license.

The terms HDMI and HDMI High-Definition Multimedia Interface, and the HDMI logo are trademarks or registered trademarks of HDMI Licensing LLC in the United States and other countries.

VESA, VESA logo, DisplayPort compliance logo and DisplayPort compliance logo for dual-mode source devices are all registered trademarks of the Video Electronics Standards Association.

The SuperSpeed USB Trident logo is a registered trademark of USB Implementers Forum, Inc.

PRODUCT SPECIFICATIONS

The product specifications are subject to change without prior notice for product improvements.

" ~ " refers to alternating current (AC), " ⎓ " refers to direct current (DC).

LCD Screen	Type	TFT (Thin Film Transistor) LCD (Liquid Crystal Display) Screen	
	Pixel Pitch	0.1554 mm x 0.1554 mm	
Resolution	Maximum resolution	3840 x 2160 @ 60 Hz	
	Recommended resolution		
Video signal	Horizontal frequency	30 kHz to 135 kHz	
	Vertical frequency	56 Hz to 61 Hz	
Input Connectors	Potential Equalization Conductor, SDI IN, DVI-D IN, HDMI IN, DP (DisplayPort) IN, USB UP (SS), USB (SS), RS-232C		
Output Connectors	SDI OUT, DVI-D OUT, DP OUT		
Power Source	Power Rating	19 V ⎓ 6.32 A	
	Power consumption	Max 120 W Off Mode: ≤ 0.3 W	
AC/DC Adaptor	DA-120D19 type, manufactured by Asian Power Devices Inc. (APD) Input: 100-240 V~ 50-60 Hz, 1.8-0.7 A Output: 19 V ⎓ 6.32 A Class I		
Environmental Conditions	Operating Conditions	Temperature	0 °C to 40 °C (32 °F to 104 °F)
		Humidity	0 % to 80 %
		Pressure	700 hPa to 1060 hPa
	Storing Conditions	Temperature	-20 °C to 60 °C (-4 °F to 140 °F)
		Humidity	0 % to 85 %
		Pressure	500 hPa to 1060 hPa

Dimensions (mm)	Monitor Size (Width x Height x Depth)
	654.4 x 410.9 x 58 (25.7 inches x 16.1 inches x 2.2 inches)
Weight (without packaging) (kg)	7.7 (16.9 lbs)

Medical Specifications	Prevention of electric shock	Class Ⅰ
	Classification according to the degree of protection against ingress of water or particulate matter	Front: IP35 Except for Front: IP32
	Level of safety in places where flammable anesthetics are mixed with air, oxygen or nitrogen oxides	Not suitable for use in places where flammable anesthetics are mixed with air, oxygen or nitrogen oxides.
	Operating mode	Continuous

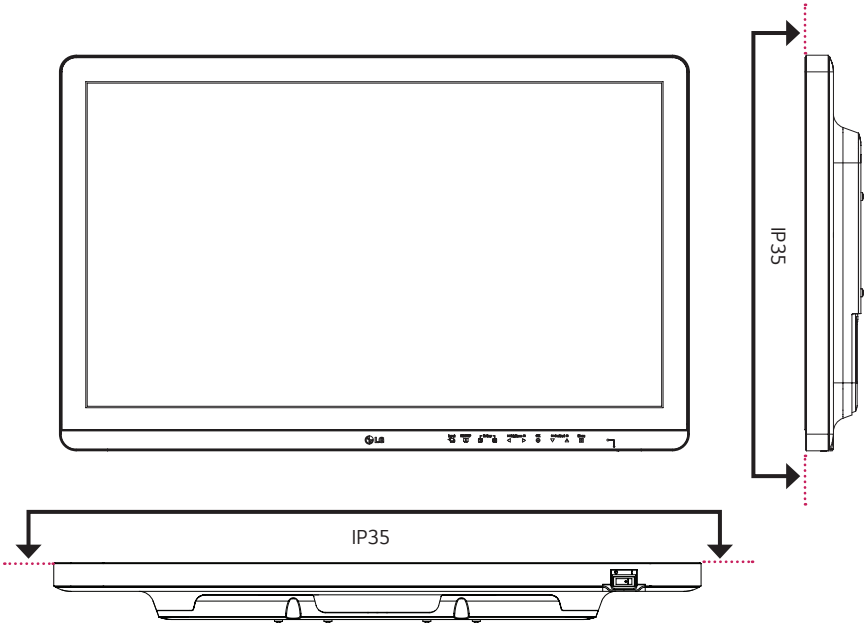

ON CLEANING

Recommended Cleaning Chemicals

- Isopropanol 100 %
- Ethanol 70 %
- Cidex® OPA
- 0.9% NaCl solution
- Biospot 500 ppm

How to Use Cleaner

- Prior to cleaning, turn off the monitor and remove the power cable.
- Soak a soft cloth in a recommended cleaner, then lightly rub the screen with no more than 1 N of force.
- The cleaner could cause serious damage if it leaks inside the monitor while cleaning.
- Do not clean the screen's LCD panel as it may be damaged. Clean the other parts of the monitor.
- Do not use benzene, thinner, acids or alkaline cleaners or other such solvents.
- Cleaning guidelines for displays must only be carried out by medical professionals (doctors or nurses) and must not be handled by patients.

ASSEMBLY AND PREPARING

Product Composition

Please check whether all the components are included in the box before using the product. If there are any missing components, contact the retailer where you purchased the product. Note that the product and related components may look different from those shown here.

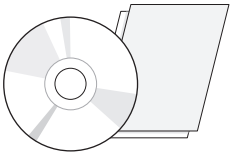

CD (Software/Owner's Manual)/
Regulatory Manual/Cards

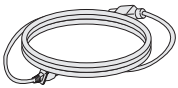

Power Cord

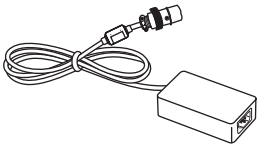

AC/DC Adaptor

DisplayPort Cable

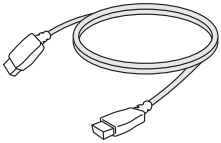

HDMI Cable

CAUTION

- Always use genuine LG components to ensure safety and product performance.
- The product warranty will not cover damage or injury caused by the use of unauthorized components.
- It is recommend that use the supplied components.
- If you use generic cables not certified by LG, the screen may not display or there may be image noises.
- Need to use the authorized components about the below accessories. Unauthorized components may be cause of the damage and malfunction of the product.

Component	Standard
HDMI Cable	Support HDMI 2.0 version, UL, Impedance 100ohm
DisplayPort Cable	Support DISPLAYPORT 1.2a version, UL, Impedance 100ohm
Power Cord	US – Approved Medical grade regulation Others – Approved country safety regulation

The AC/DC adaptors and etc. except the upper components need to be used only supplied by manufacturer.

NOTE

- The components may look different from those illustrated here.
- Without prior notice, all product information and specifications contained in this manual are subject to change to improve the performance of the product.
- To purchase optional accessories, visit an electronics store or an online shopping site, or contact the retailer from which you purchased the product.
- The power cord provided may differ depending upon the region.

Supported Drivers and Software

Check the drivers and software supported by your product and refer to the manuals on the CD enclosed in the product package.

Drivers and Software	Installation Priority	27HJ710S
Monitor Driver	Recommended	O
True Color Pro	Optional	O

- Required and Recommended: You can download and install the latest version from the enclosed CD or from the LGE website (*www.lg.com*).
- Optional: You can download and install the latest version from the LGE website (*www.lg.com*).

Product and LED Control buttons

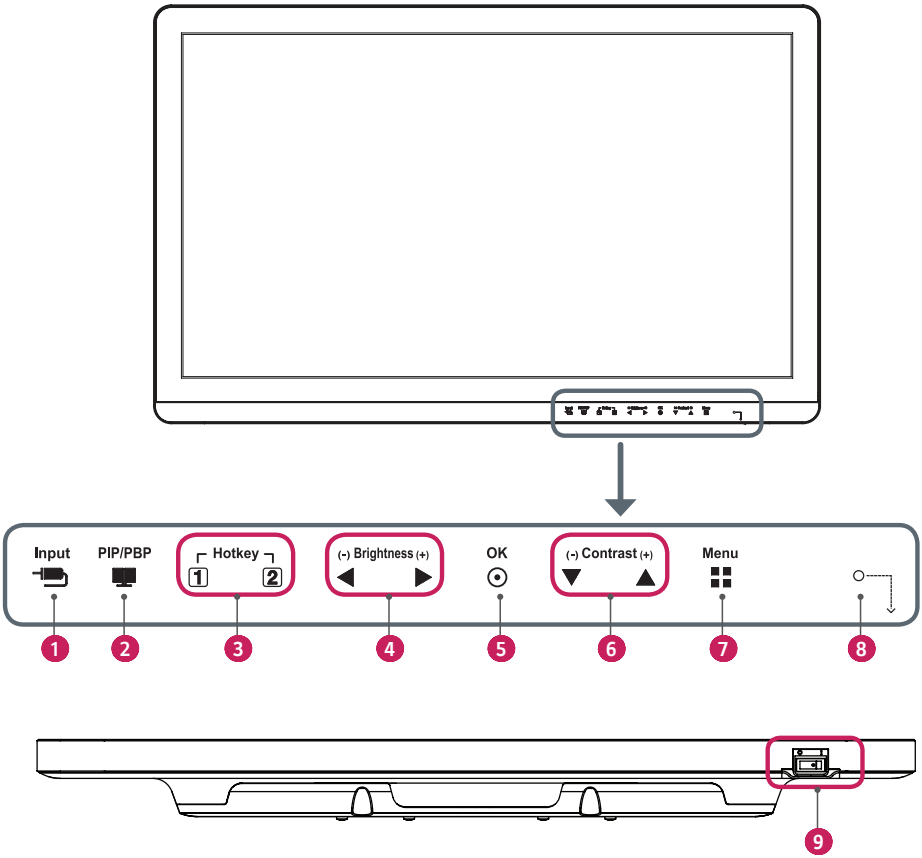

LED Control button Functions

1	Input	Selects the input mode.
2	PIP/PBP	Displays the screens of two input modes on one monitor.
3	Hotkey 1, 2	Opens the **Hotkey Settings** menu.
4	Brightness	Adjusts the screen brightness.
5	OK	Selects menus or options and confirms.
6	Contrast	Adjusts the screen contrast.
7	Menu	Displays LED Control buttons on the front panel and opens the menu mode.
8	Power indicator	The green indicator illuminates if the power is on. The arrow indicates the position of the power switch.
9	Power switch	Turns the power on/off.

NOTE

- The Power button is located at the bottom right on the front of the monitor.
- If the Control Key LED is turned off, press the Control Key [Menu] button to turn the Control button LED on. When the Control Key LED is turned on, you can control the Control Key functions.

Connectors

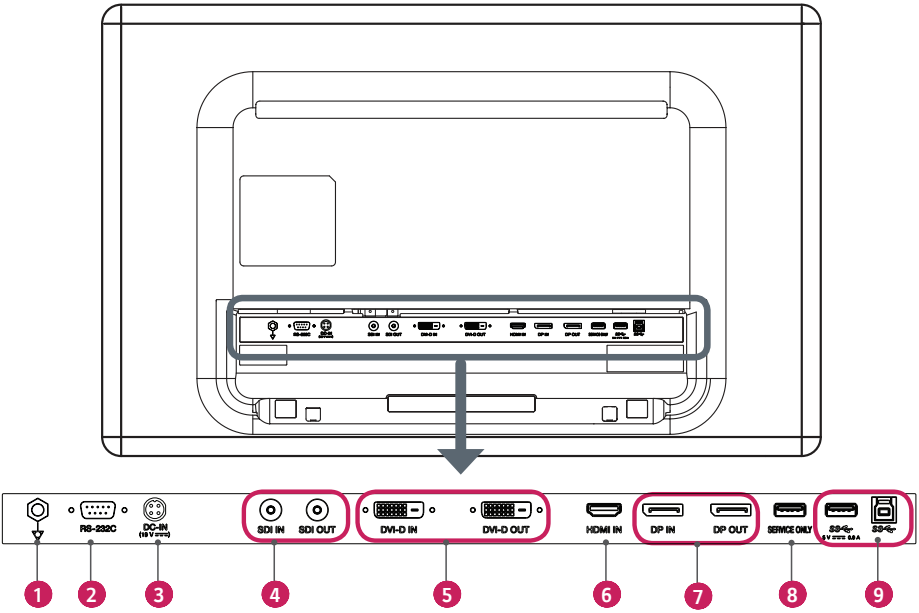

1	Potential Equalization Conductor - Connect an equipotential plug.
2	**RS-232C** Connector - Connect to an external device through the RS-232C connector and control the monitor.
3	**DC-IN (19 V ⎓)** Connector - Connect the AC/DC adaptor.
4	**SDI IN** / **SDI OUT** Connector - Receives or transmits serial digital component signals.
5	**DVI-D IN** / **DVI-D OUT** Connector - Receives or transmits digital video signals.
6	**HDMI IN** Connector - Receives digital video signals. - DVI to HDMI/DP (DisplayPort) to HDMI cables may cause compatibility issues. Make sure to use certified cables that bear the HDMI logo. If you do not use a certified HDMI cable, the screen may not display, or a connection error may occur. ▶ Recommended HDMI cable types - High-speed HDMI®/™ cables - High-speed HDMI®/™ Ethernet cables

7	**DP IN** / **DP OUT** Connector - Receives or transmits digital video signals. - There may be no video output depending on the DP (DisplayPort) version of your PC. - A cable with DisplayPort 1.2 specifications is recommended when using a Mini DP to DP (Mini DisplayPort to DisplayPort) cable.
8	**SERVICE ONLY** Connector - The USB port is used for service only.
9	**SS 5 V ⎓ 0.9 A** (USB Connector) - Used for HW Calibrator (Optional Accessory) connection. - A keyboard, mouse or USB device can be connected. **CAUTION** Precautions for Using USB Storage Devices • A USB storage device installed using an automatic recognition program or its own driver may not be recognizable. • Some USB devices may not be supported or may not work properly. • It is recommended that you use a USB hub or hard disk drive with power supplied. (If insufficient power is supplied, the USB storage device may not be detected properly) **SS 5 V ⎓ 0.9 A / SS** (USB Connector) - Connect your accessory to the USB input port. - To use USB 3.0, connect a USB 3.0 Type A-B cable to your PC.

NOTE

- All signal OUT connectors (SDI, DVI, DP) output signals when the monitor's power switch is on. Signals are not output when the power switch is off.
- This monitor supports the *Plug and Play feature.
  * Plug and Play: A feature that allows you to add a device to your computer without having to reconfigure anything or install any manual drivers.
- The standard of the DVI and the SDI output terminals for transmitting a screen.
  - DVI OUT: Connect a 5-meter cable to transmit a copied screen to a monitor.
  - SDI OUT: Connect a 100-meter cable (BELDEN 1694) to transmit a copied screen to a monitor.

Installing the Monitor

Cable connection and organize

Before connecting the connectors, remove the back door as shown below.

1

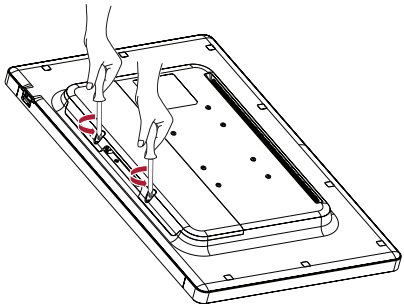

2

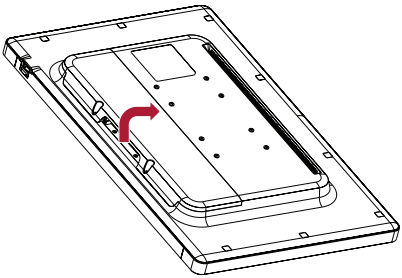

3

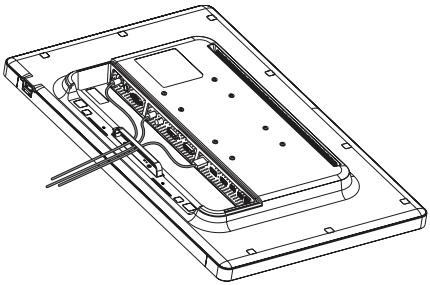

4

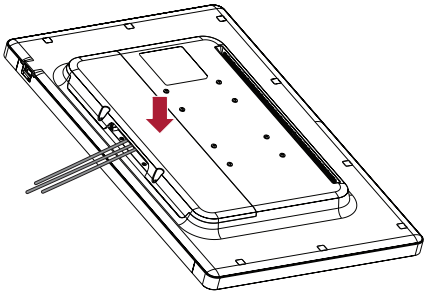

5

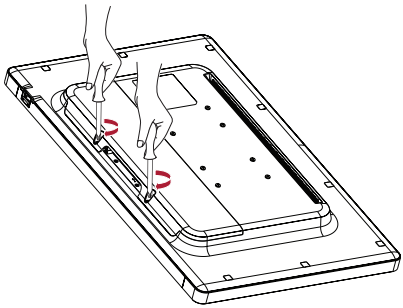

CAUTION

- When the back door is attached to the monitor, the monitor meets water resistance standards. Do not use the monitor with the back door detached, as the water resistance capability is not guaranteed without the door.
- Only fix the back door with screws when the potential equalization conductor is not connected. When the potential equalization conductor is connected, don't fix the back door with screws (you can cover the back door with a magnet only).

Installing on the Wall

Install the monitor at least 100 mm (3.9 inches) away from the wall on each side of the monitor to ensure sufficient ventilation. Detailed installation instructions can be obtained from your local dealer. Please refer to the manual to install and set up a tilting wall mounting bracket.

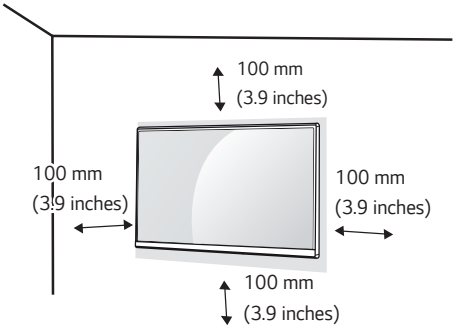

To install the monitor to a wall, attach a wall mount plate (optional) to the back of the monitor.

Make sure that the wall mount plate (optional) is securely fixed to the monitor and to the wall.

1 Using screws longer than the standard length may damage the inside of the product.

2 A non-VESA standard screw may damage the product and cause the monitor to fall. LG Electronics is not liable for any accidents relating to the use of non-standard screws.

Wall Mount (mm)	100 x 100	200 x 100
Standard screw	M4 x L10	M4 x L10
Required screws	4	4
Wall Mount Plate (optional)	RW120 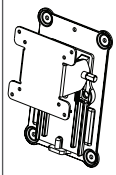	RW240 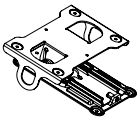

NOTE

- The screws (M4 x L10) can be found fastened in the wall mount screw holes on the back of the monitor.
- Use the screws specified by VESA standards.
- The wall mount kit includes an installation manual and the necessary parts.
- The wall mount plate is an optional item. You can obtain additional accessories from your local dealer.
- The length of screws may differ depending on the wall mount. Be sure to use the proper length.
- For more information, please refer to the manual for the wall mounting bracket.

CAUTION

- Disconnect the power cord first. Then move or install the monitor. There is risk of electric shock.
- Installing the monitor on the ceiling or on a slanted wall may result in the monitor falling off, which could lead to injury. Use an authorized LG wall mount and contact the local dealer or qualified personnel.
- Applying excessive force when tightening screws may damage the monitor. Such damage is not covered by the product warranty.
- Use the wall mounting bracket and screws that confirm to VESA standards. Damage caused by the use or misuse of inappropriate components is not covered by the product warranty.
- When measured from the back of the monitor, the length of each installed screw must be 8 mm (0.3 inches) or less.

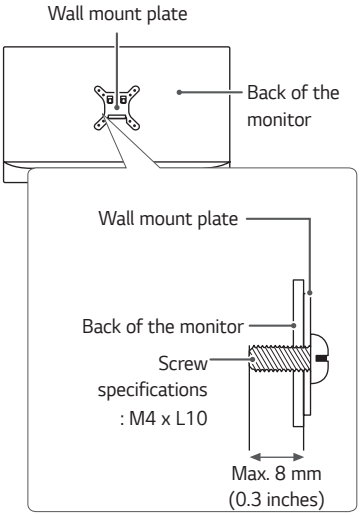

Precautions for Connecting the Power Cord

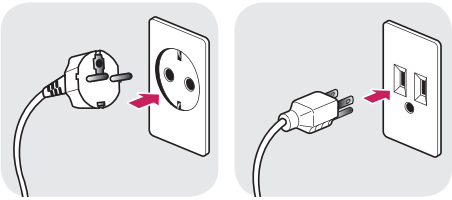

100-240 V ~

- Make sure to use the power cord that is provided in the product package. Connect the cord to a grounded power outlet.
- If you need another power cord, please contact your local dealer or the nearest retail store.

SETTINGS

Activate Main Menu

1 Press the [Menu] button to activate the LED Control button. Pressing the [Menu] button while the LED Control button is activated brings up the OSD menu.

2 Use the [◄ Brightness ►] left/right and [▼ Contrast ▲] up/down LED Control buttons to navigate.

3 Press the [Menu] or [◄ Brightness] LED Control button to exit the OSD menu.

CAUTION

- The actual On Screen Displays (OSDs) that appear on your monitor may differ from those shown in this manual.

QUICK SETTINGS

The following settings are available.

Quick Settings	Description	
Brightness	Adjusts the brightness of the screen. **NOTE** • You can turn the **Brightness Stabilization** to **On**/ **Off** by pressing the ▼ button in the **Brightness** menu. • When the **Brightness Stabilization** is **On**, **Brightness** menus becomes disabled. • When the **Brightness Stabilization** is **On**, **SMART ENERGY SAVING** and **DFC** menus become disabled.	
Contrast	Adjusts the color contrast of the screen.	
Hot key Settings	Assigns hotkeys for picture settings. Once configured, the assigned menu is activated when a hotkey is pressed. (**PIP Size**, **Mono**, **Color Temp**, **Gamma**, **Black Stabilizer**, **Screen Zoom, Off**)	
	Hotkey 1	Assigns a function to **Hotkey 1**.
	Hotkey 2	Assigns a function to **Hotkey 2**.

Quick Settings	Description	
User Preset	User Preset allows the user to save or load up to 10 picture quality settings for multiple connected devices in each preset. **NOTE** • You can use User Preset to import or save items in **Picture Adjust** and **Color Adjust** of the **Picture** menu.	
	User Name	Allows the user to change and register a user name (**Preset 1** ~ **Preset 3**, **User 1** ~ **User 7**) as the user wants. The user can enter a user name to be registered by using the screen keyboard. **Preset 1** ~ **Preset 3** are factory-set user names as samples and the user can change the names.
	Load User Settings	Allows the user to change the picture quality settings by loading the User Preset settings.
	Save User Settings	Saves the current picture quality settings in the corresponding User Preset. **Preset 1** ~ **Preset 3** are factory-set values as samples and the user can change the values. • **Preset 1**: Use this preset for bluish color. • **Preset2**: Use this preset for greenish color and brighter low-gradation. • **Preset 3**: Use this preset to soften the red tone. • **User 1** ~ **User 7**: Initial values are the same as the factory settings.
	Default User Settings	Loads the initial basic picture settings.
	User Preset Reset	Initializes User Preset settings. • Initializes the existing user name and user settings to be restored to factory settings (**Preset 1** ~ **Preset 3**, **User 1** ~ **User 7**).

INPUT

The following settings are available.

Input	Description		
Main Input List	Selects the input mode.		
Input List			
Aspect Ratio	Adjusts the aspect ratio of the screen. (**Full Wide**, **Original**, **1:1**) **NOTE** • The display may look the same for **Full Wide**, **Original**, and **1:1** options at the recommended resolution (3840 x 2160).		
	Main Aspect Ratio	**Full Wide**	Displays the video to fit the PBP / PIP screen, regardless of the video signal input.
		Original	Displays the video in the aspect ratio of the video signal input on the PBP / PIP screen.
	Sub Aspect Ratio	**Full Wide**	Displays the video to fit the PBP / PIP screen, regardless of the video signal input.
		Original	Displays the video in the aspect ratio of the video signal input on the PBP / PIP screen.

Input	Description	
PBP / PIP	Displays the screens of two input modes on one monitor.	
PIP Size	Adjusts the PIP size. (**Small**, **Medium**, **Large**)	
Main/Sub Screen Change	Toggles between the main screen and the sub screen in **PBP / PIP** mode.	
Failover Input Switch	**Main Input** is changed to **Failover Input** when there is no signal at the **Main Input**.	
	Failover Input Switch	The **Failover Input Switch** input will be operated or turned off.
	Main Input	Select **Main Input** source.
	Failover Input	Select **Failover Input** source.

NOTE

- When there is no **Sub Screen** signal, **PIP Size** and **Main/Sub Screen Change** are disabled.

PICTURE

The following settings are available.

Picture	Description	
Picture Mode	**Custom**	Allows the user to adjust each element. The color mode of the main menu can be adjusted.
	Mono	Mono (black and white) color mode.
	sRGB	A standard RGB color mode for the monitor and printer.
	EBU	A standard TV PAL color mode for broadcasts.
	REC709	A standard HDTV color mode for broadcasts.
	REC2020	Optimizes the screen for REC2020.
	SMPTE-C	A standard TV NTSC color mode for broadcasts.
	DICOM	A mode optimized for viewing medical images. You can brighten the screen in the OSD menu.
	Calibration 1	Adjusts to the last calibrated screen.
	Calibration 2	Adjusts to the previously calibrated screen.
	NOTE • **Brightness Stabilization** function can be enabled in **Custom** mode. • If the **Picture Mode** is changed in the DisplayPort (DP) input, the screen may flicker or the resolution of your PC screen may be affected. • **Calibration 2**: This menu is enabled if you install the TRUE COLOR PRO program and perform a calibration.	

Picture	Description		
Picture Adjust	**Brightness**	Adjusts the brightness of the screen. **NOTE** • You can turn the **Brightness Stabilization** to **On**/ **Off** by pressing the ▼ button in the **Brightness** menu. • When the **Brightness Stabilization** is **On**, **Brightness** menus becomes disabled. • When the **Brightness Stabilization** is **On**, **SMART ENERGY SAVING** and **DFC** menus become disabled.	
	Contrast	Adjusts the color contrast of the screen.	
	Sharpness	Adjusts the sharpness of the screen.	
	Brightness Stabilization	Maintains the brightness configured for medical environments.	
		On	Adjusts the brightness automatically.
		Off	Deactivates the function, and allows the user to configure the brightness.
	SUPER RESOLUTION+	**High**	Select this option for crystal clear images. Best for high-definition video or games.
		Middle	The optimized picture quality is displayed when a user wants images between low and high modes for comfortable viewing. Best for UCC or SD video.
		Low	The optimized picture quality is displayed when a user wants smooth and natural images. Best for still images with less movement.
		Off	Select this option for the normal user experience. Disables **SUPER RESOLUTION+**.
	Black Level	Sets the offset level. (HDMI only) • Offset: A reference for video signals. Offset is the darkest color that the monitor can display.	
		High	Keeps the current contrast ratio of the screen.
		Low	Lowers the black levels and raises the white levels from the current contrast ratio of the screen.

Picture	Description				
Picture Adjust	**HDMI ULTRA HD Deep Color**	Provides sharper images when connected to a device supporting ULTRA HD Deep Color. **NOTE** • If the connected device does not support ULTRA HD Deep Color, the feature may not work properly. • If you experience a problem, set **HDMI ULTRA HD Deep Color** to **Off**.			
		Formats supported at 4K@ 60 Hz[1)]			
		Resolution	**Frame rate (Hz)**	**Deep color / chroma sampling**	
				8-bit	**10-bit**
		3840 x 2160	59.94 60.00	YCbCr 4:2:0	
				YCbCr 4:2:2	
				YCbCr 4:4:4	-
				RGB 4:4:4	-
		1) Supported when **HDMI ULTRA HD Deep Color** is set to **ON**.			
	DFC	**On**	Adjusts the brightness automatically according to the screen.		
		Off	Disables the **DFC** feature.		
	Response Time	Sets the response time for displayed pictures based on the speed of the screen. For a normal environment, **Normal** is recommended. For a fast-moving picture, **Fast** is recommended. Setting the response time to **Fast** may cause image sticking.			
		Fast	Sets the response time to fast.		
		Normal	Sets the response time to normal.		
		Slow	Sets the response time to slow.		
		Off	Does not use the response time improvement feature.		
	Black Stabilizer	Objects can be seen more clearly in dark screen picture by adjusting the black level. Increasing the **Black Stabilizer** value brightens the low gray levels on the screen. (You can easily distinguish objects on a dark game screen.) Reducing the **Black Stabilizer** value darkens the low gray levels and increases the dynamic contrast on the screen.			

Picture	Description		
Picture Adjust	**Uniformity**	Adjusts the uniformity of screen brightness. **NOTE** • Enabling **Uniformity** may reduce the overall brightness of the image.	
		On	Enables the **Uniformity** feature.
		Off	Disables the **Uniformity** feature.
Color Adjust	**Gamma**	Custom gamma settings: **Gamma 1.8**, **Gamma 2.0**, **Gamma 2.2**, **Gamma 2.4**, **Gamma 2.6**, **DICOM Gamma Curve**. The higher the gamma value, the darker the image becomes. Likewise, the lower the gamma value, the lighter the image becomes.	
	Color Temp	Adjusts the DICOM Gamma. (**Custom**, **6500K**, **8500K**, **9300K**, **Manual**)	
		Custom	The user can customize the red, green and blue color.
		6500K	Sets the picture color to the color temperature of a reddish 6500K.
		8500K	Sets the picture color to the color temperatures of 8500K, setting to a color between red and blue.
		9300K	Sets the picture color to the color temperature of a bluish 9300K.
		Manual	Adjusts the color temperature in 500K increments. (Note that 9300K is supported rather than 9500K.)
	Red	You can customize the picture color using red, green and blue.	
	Green		
	Blue		
	Six Color	Fulfills your color requirements by adjusting the hue and saturation of the six colors (red, green, blue, cyan, magenta and yellow). The settings are then saved.	
		Hue	Adjusts the tone of the screen colors.
		Saturation	Adjusts the saturation of the screen colors. The lower the value, the less saturated and brighter the colors become. The higher the value, the more saturated and darker the colors become.
Picture Reset	Returns the colors to the default settings.		

GENERAL

The following settings are available.

General	Description	
Language	Sets the menu screen to the desired language.	
SMART ENERGY SAVING	Conserve energy by using luminance compensation algorithm.	
	High	Saves energy using the high-efficiency **SMART ENERGY SAVING** feature.
	Low	Saves energy using the low-efficiency **SMART ENERGY SAVING** feature.
	Off	Disables the **SMART ENERGY SAVING** feature.
HW Calibration	**RS-232C** and **HW Calibration** cannot be used together simultaneously.	
	On	Enables the **HW Calibration** feature.
	Off	Disables the **HW Calibration** feature.
RS-232C	**RS-232C** and **HW Calibration** cannot be used together simultaneously.	
	Serial Port	Enables or disables the **RS-232C** feature.
	Set ID	Configures the **Set ID.** (Configuration range: 1-10)
LED Control Button	Adjusts how long the control button LEDs remain lit. (**Always On**, **20Sec Time Out**, **10Sec Time Out**, **5Sec Time Out**)	

General	Description	
DVI Power Supply	Supplies power to devices connected to the DVI input port as a dongle without power.	
	On	Activates the **DVI Power Supply** feature.
	Off	Deactivates the **DVI Power Supply** feature.
Hot key Settings	Assigns hotkeys for picture settings. Once configured, the assigned menu is activated when a hotkey is pressed.(**PIP Size**, **Mono**, **Color Temp**, **Gamma**, **Black Stabilizer**, **Screen Zoom, Off**)	
	Hotkey 1	Assigns a function to **Hotkey 1**.
	Hotkey 2	Assigns a function to **Hotkey 2**.
User Preset	User Preset allows the user to save or load up to 10 picture quality settings for multiple connected devices in each preset. **NOTE** • You can use User Preset to import or save items in **Picture Adjust** and **Color Adjust** of the **Picture** menu.	
	User Name	Allows the user to change and register a user name (**Preset 1** ~ **Preset 3**, **User 1** ~ **User 7**) as the user wants. The user can enter a user name to be registered by using the screen keyboard. **Preset 1** ~ **Preset 3** are factory-set user names as samples and the user can change the names.
	Load User Settings	Allows the user to change the picture quality settings by loading the User Preset settings.
	Save User Settings	Saves the current picture quality settings in the corresponding User Preset. **Preset 1** ~ **Preset 3** are factory-set values as samples and the user can change the values. • **Preset 1**: Use this preset for bluish color. • **Preset2**: Use this preset for greenish color and brighter low-gradation. • **Preset 3**: Use this preset to soften the red tone. • **User 1** ~ **User 7**: Initial values are the same as the factory settings.
	Default User Settings	Loads the initial basic picture settings.
	User Preset Reset	Initializes User Preset settings. • Initializes the existing user name and user settings to be restored to factory settings (**Preset 1** ~ **Preset 3**, **User 1** ~ **User 7**).

General	Description	
Auto Screen Off	The screen turns off automatically when there are no monitor signals for a set period of time.	
	On	Enables the **Auto Screen Off** feature.
	Off	Disables the **Auto Screen Off** feature.
DisplayPort 1.2	Enables or disables **DisplayPort 1.2**. **NOTE** • Be sure to configure this option according to the DisplayPort version supported by your graphics card. Set this option to **Off** if your graphics card is not compatible. • When **DisplayPort 1.2** is disabled, you cannot use the 10-bit output of your graphics card.	
OSD Lock	This feature disables the configuration and adjustment of menus.	
	On	Enables the **OSD Lock** feature.
	Off	Disables the **OSD Lock** feature.
	NOTE • Deactivates all functions except the **Quick Settings** menu and **Input** menu's **Input List**, **Aspect Ratio**, **PBP / PIP** functions, **Failover Input Switch**, and the **General** menu's **OSD Lock** and **Information** functions.	
Information	Displays the total power on time, serial number and resolution information.	
Reset	**Do you want to reset your settings?**	
	Yes	Restores the default settings.
	No	Cancels the reset.

TROUBLESHOOTING

Nothing is displayed on the screen.	
Is the monitor's power cord plugged in?	• Check if the power cord is correctly plugged into the power outlet.
Is the power indicator on?	• Check your power cable connection and turn the power switch on.
Is the power indicator displaying as green?	• Check if the input setting is correct when the PC and the product are connected. (**MENU** > **Quick Settings** > **Input**)
Is the **"Out of Range"** message displayed?	• This occurs when the signals transferred from your PC (graphics card) are outside the horizontal or vertical frequency range of your monitor. Please see the "Product Specification" section of this manual to set the appropriate frequency.
Is the **'No Signal'** message displayed?	• This is displayed when the signal cable between the PC and the monitor is missing or disconnected. Check the cable and reconnect it.
The screen may not be displayed properly when configuring DisplayPort (DisplayPort) 1.2 in a Mac product.	• DisplayPort 1.2 may not be supported depending on the Mac product. Please contact the manufacturer.

The screen retains an image.	
Does image sticking occur even when the monitor is turned off?	• Displaying a still image for a prolonged period may damage the screen, resulting in image sticking. • To extend the lifetime of the monitor, use a screensaver.

The screen display is unstable and shaky. Images displayed on the monitor leave shadow trails.	
Did you select the appropriate resolution?	• If the selected resolution is HDMI 1080i 60/50 Hz (interlaced), the screen may be flickering. Change the resolution to 1080P or the recommended resolution.

NOTE

- Vertical Frequency: In order to display an image, the screen must be refreshed dozens of times per second, like a fluorescent lamp.

  The number of times the screen is refreshed per second is called vertical frequency, or refresh rate, and is represented by Hz.
- Horizontal Frequency: The time it takes to display one horizontal line is called the horizontal cycle.

  If 1 is divided by the horizontal interval, the result is the number of horizontal lines displayed per second. This is called horizontal frequency and is represented by kHz.

NOTE

- Check if your graphics card's resolution or frequency is within the range supported by your monitor and set your graphics card to the recommended (optimal) resolution in **Control Panel** > **Display** > **Settings** in Windows. (The settings may differ depending on your operating system)
- Not setting your graphics card to the recommended (optimal) resolution may result in blurred text, a dimmed screen, a truncated display area or misalignment of the display.
- The setting method may differ depending on the computer and operating system. Some resolutions may not be available depending on your graphics card's performance. If this is the case, contact the manufacturer of your computer or graphics card for help.
- Some graphics cards may not support the 3840 x 2160 resolution. If the resolution cannot be displayed, contact the manufacturer of your graphics card.

The display color is abnormal.	
Does the display appear discolored (16 colors)?	• Set the number of colors to 24-bits (True Color) or above: **Control Panel** > **Display** > **Settings** > **Color Quality** in Windows (the settings may differ depending on your operating system).
Does the display color appear unstable or monochrome?	• Check the connection status of the signal cable and connect it properly or reinsert your PC's graphics card.
Are there spots on the screen?	• When using the monitor, pixelated spots (red, green, blue, white or black) may appear on the screen. This is normal for an LCD screen. It is not an error, nor is it related to the monitor's performance.

The 'Unknown Monitor' message appears when the monitor is connected.	
Did you install the monitor driver?	• Install the enclosed monitor driver provided with the monitor or go to the LG Electronics homepage (*http://www.lg.com*) to download and install the monitor driver. • Check your graphics card user manual to see if the Plug and Play function is supported.

PRODUCT SPECIFICATIONS

The product specifications are subject to change without prior notice for product improvements.

Preset Modes

DisplayPort

Preset Modes	Horizontal Frequency (kHz)	Vertical Frequency (Hz)	Polarity (H/V)	Remarks
640 x 480	31.469	59.94	-/-	
800 x 600	37.879	60.317	+/+	
1024 x 768	48.363	60	-/-	
1152 x 864	54.347	60.05	+/+	
1280 x 720	45	60	+/+	
1280 x 1024	63.981	60.02	+/+	
1600 x 900	60	60	+/+	
1920 x 1080	67.5	60	+/-	
2560 x 1440	88.79	59.95	+/-	
3840 x 2160	66.66	30	+/-	
3840 x 2160	133.32	60	+/-	

HDMI

Preset Modes	Horizontal Frequency (kHz)	Vertical Frequency (Hz)	Polarity (H/V)	Remarks
640 x 480	31.469	59.94	-/-	
800 x 600	37.879	60.317	+/+	
1024 x 768	48.363	60	-/-	
1152 x 864	54.347	60.05	+/+	
1280 x 720	45	60	+/+	
1280 x 1024	63.981	60.02	+/+	
1600 x 900	60	60	+/+	
1920 x 1080	67.5	60	+/-	
2560 x 1440	88.79	59.95	+/-	
3840 x 2160	67.5	30	+/-	
3840 x 2160	135	60	+/-	When the **HDMI ULTRA HD Deep Color** is set to **On**

DVI

Preset Modes	Horizontal Frequency (kHz)	Vertical Frequency (Hz)	Polarity (H/V)	Remarks
640 x 480	31.469	59.94	-/-	
800 x 600	37.879	60.317	+/+	
1024 x 768	48.363	60	-/-	
1152 x 864	54.347	60.05	+/+	
1280 x 720	45	60	+/+	
1280 x 1024	63.981	60.02	+/+	
1600 x 900	60	60	+/+	
1920 x 1080	67.5	60	+/-	

Input Timing (Video)

Vertical dimensions	Vertical Frequency (Hz)	DVI	HDMI	DP	SDI
480i	59.94/60	-	-	-	O
480p	59.94/60	O	O	O	-
576p	50	O	O	-	-
576i	50	-	-	-	O
720p	59.94/60	O	O	O	O
720p	50	O	O	-	O
1080i	59.94/60	O	O	-	O
1080p	59.94/60	O	O	O	O
1080i	50	O	O	-	O
1080p	50	O	O	-	O
1080p	23.98/24	-	O	-	-
1080p	29.97/30	-	O	-	O
2160p	23.98/24	-	O	-	-
2160p	25	-	O	-	-
2160p	29.97/30	-	O	-	-
2160p	50	-	O	-	-
2160p	59.94/60	-	O	-	-

Power indicator

Mode	LED Color
On Mode	Green

EXTERNAL CONTROLLER SETUP

The actual product may differ from the picture shown.
Connect the RS-232C (serial connector) of the PC to the **RS-232C IN** connector at the back of the monitor.
Purchase a cable to connect the RS-232C connectors, as the cable is not provided as an accessory.

Use an RS-232C cable to remotely control the monitor (see Figure 1).

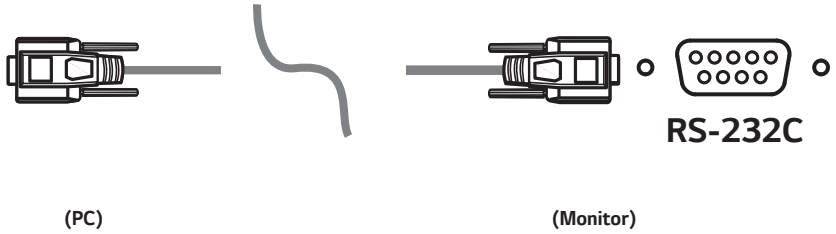

Figure 1: RS-232C Connection Diagram

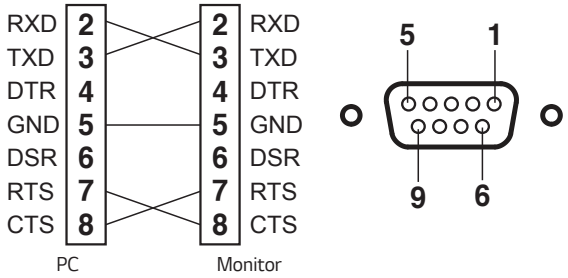

* There are no connections to Pin 1 and Pin 9.

Set ID Function

This function allows you to assign a unique ID to the monitor to control it remotely from your PC.
Please refer to the "Actual Data Structure".

1 Press the [Menu] button.
2 Use the ◄, ►, ▼, ▲ buttons to select **General**. Then press the **OK** button.
3 Use the ◄, ►, ▼, ▲ buttons to select **Set ID**. Then press the **OK** button.
4 Select a **Set ID** to assign. Then press the **OK** button. The Set ID can be a value from 1 to 10.
5 Press the ◄ button to exit (pressing the [Menu] button hides the OSD).

Communication Parameters

- Baud rate: 9600 bps (UART)
- Data length: 8 bits
- Parity bit: None
- Stop bit: 1 bit
- Communication code: ASCII code
- Crossed (reverse) cable used.

Command Reference List

Title	Command1	Command2	Data (Hexadecimal)
01. Power	k	a	00 - 01
02. Screen Mute	k	d	00 - 01
03. Input select (Main)	k	b	00 - 03
04. Input select (Sub)	k	y	00 - 03
05. Aspect Ratio (Main)	k	c	00 - 02
06. Aspect Ratio (Sub)	k	o	00 - 01
07. PBP/PIP	k	n	00 - 05
08. PIP Size	k	p	00 - 02
09. Main/Sub Screen Change	m	a	01
10. Picture Mode	d	x	00 - 09
11. Brightness	k	h	00 - 64
12. Contrast	k	g	00 - 64
13. Sharpness	k	k	00 - 64
14. Brightness Stabilization	m	b	00 - 01
15. SUPER RESOLUTION+	m	c	00 - 03
16. Black Level	m	d	00 - 01
17. HDMI Ultra HD Deep Color	m	e	00 - 01
18. DFC	m	f	00 - 01
19. Response Time	m	g	00 - 03
20. Black Stabilizer	m	h	00 - 64
21. Uniformity	m	i	00 - 01
22. Gamma	m	j	00 - 05
23. Color Temp	k	u	00 - 04
24. Red Gain	j	w	00 - 64
25. Green Gain	j	y	00 - 64
26. Blue Gain	j	z	00 - 64
27. Language	f	i	00 - 10
28. SMART ENERGY SAVING	m	k	00 - 02
29. LED Control Button	m	l	00 - 03
30. DVI Power Supply	m	m	00 - 01
31. Auto Screen Off	m	n	00 - 01
32. DisplayPort 1.2	m	o	00 - 01
33. OSD Lock	k	m	00 - 01
34. Reset	f	k	00 - 02
35. Failover Input Switch	k	z	00 ~ 01
36. Main Input	k	v	00 ~ 03
37. Failover Input	k	w	00 ~ 03

Transmission/Reception Protocol

Transmission

[Command1][Command2][ ][Set ID][ ][Data][Cr]

[Command 1]: j, k, m, x

[Command 2]: This command is used to control the monitor.

[Set ID]: Used to identify the monitor being controlled. [Set ID] can be assigned to each monitor under GENERAL in the Settings Menu.

A value from 1 to 10 can be assigned. By selecting '0' for the [Set ID] value in the protocol format, you can control all connected monitors.

* The value is displayed as base 10 on the OSD menu and used as base 16 (0x00 - 0x63) in the transmission/reception protocol for remote control.

[Data]: Transmits a setting value (Data) required for the command described previously. (base 16)

When the Data 'FF' is sent, the setting value corresponding to the specific command is read (Data read mode).

[Cr]: Carriage return, which is '0x0D' in ASCII code.

[ ]: Space, which is '0x20' in ASCII code.

OK Acknowledgment

[Command2][ ][Set ID][ ][OK][Data][x]

When the Data has been successfully received, the monitor sends an ACK response signal in the above format. The Data showing the current state is received in the Data read mode. The Data from the PC is simply returned in the Data write mode.

Error Acknowledgment

[Command2][ ][Set ID][ ][NG][Data][x]

When the set receives an abnormal piece of Data for an unsupported function or there is a communication error, it returns ACK in the format above.

Data 00 : Illegal code

Actual Data Structure (Base 16 → Base 10)

- See the table below when inserting a base-16 value in [Data].
- The channel setup command (ma) uses a 2-byte base-16 value ([Data]) for channel number input.

00: Step 0	32: Step 50 (Set ID 50)	FE: Step 254
01: Step 1 (Set ID 1)	33: Step 51 (Set ID 51)	FF: Step 255
...	...	...
0A: Step 10 (Set ID 10)	63: Step 99 (Set ID 99)	01 00: Step 256
...	...	...
0F: Step 15 (Set ID 15)	C7: Step 199	27 0E: Step 9998
10: Step 16 (Set ID 16)	C8: Step 200	27 0F: Step 9999
...	...	...

* Commands may work differently depending on the model and signal.

01. Power (Command: k a)

▶ This controls the monitor power on/off.

Transmission [k][a][ ][Set ID][ ][Data][Cr]

Data 00: Power Off 01: Power On

Ack [a][ ][Set ID][ ][OK/NG][Data][x]

02. Screen Mute (Command: k d)

▶ This controls the monitor display power on/off.

Transmission [k][d][ ][Set ID][ ][Data][Cr]

Data 00: Screen Mute Off 01: Screen Mute On

Ack [d][ ][Set ID][ ][OK/NG][Data][x]

03. Input select (Main) (Command: k b)

▶ This controls the input mode of the main screen.

Transmission [k][b][ ][Set ID][ ][Data][Cr]

Data
00: SDI 01: DVI
02: HDMI 03: DisplayPort

Ack [b][ ][Set ID][ ][OK/NG][Data][x]

04. Input select (Sub) (Command: k y)

▶ This controls the input mode of the sub screen.

Transmission [k][y][ ][Set ID][ ][Data][Cr]

Data
00: SDI 01: DVI
02: HDMI 03: DisplayPort

Ack [y][ ][Set ID][ ][OK/NG][Data][x]

05. Aspect Ratio (Main) (Command: k c)

▶ This adjusts the aspect ratio of the main screen.

Transmission [k][c][ ][Set ID][ ][Data][Cr]

Data

00: Full Wide 01: Original

02: 1:1

Ack [c][ ][Set ID][ ][OK/NG][Data][x]

06. Aspect Ratio (Sub) (Command: k o)

▶ This adjusts the aspect ratio of the sub screen.

Transmission [k][o][ ][Set ID][ ][Data][Cr]

Data 00: Full Wide 01: Original

Ack [o][ ][Set ID][ ][OK/NG][Data][x]

07. PBP/PIP (Command: k n)

▶ This controls the PBP/PIP mode.

Transmission [k][n][ ][Set ID][ ][Data][Cr]

Data

00: Off 01: PBP

02: PIP_LT 03: PIP_RT

04: PIP_LB 05: PIP_RB

Ack [n][ ][Set ID][ ][OK/NG][Data][x]

08. PIP Size (Command: k p)

▶ This adjusts the PIP size.

Transmission [k][p][ ][Set ID][ ][Data][Cr]

Data

00: Small 01: Medium

02: Large

Ack [p][ ][Set ID][ ][OK/NG][Data][x]

09. Main/Sub Screen Change (Command: m a)

▶ This controls the main/sub screen change in PBP mode.

Transmission [m][a][ ][Set ID][ ][Data][Cr]

Data 01: Main/Sub Screen exchange

Ack [a][ ][Set ID][ ][OK/NG][Data][x]

10. Picture Mode (Command: d x)

▶ This controls the picture mode.

Transmission [d][x][ ][Set ID][ ][Data][Cr]

Data

00: Custom	01: Mono
02: sRGB	03: EBU
04: REC709	05: REC2020
06: SMPTE-C	07: DICOM
08: Calibration 1	09: Calibration 2

Ack [x][ ][Set ID][ ][OK/NG][Data][x]

11. Brightness (Command: k h)

▶ This adjusts the screen brightness.

Transmission [k][h][ ][Set ID][ ][Data][Cr]

Data Min: 00 - Max: 64

Ack [h][ ][Set ID][ ][OK/NG][Data][x]

12. Contrast (Command: k g)

▶ This adjusts the screen contrast.

Transmission [k][g][ ][Set ID][ ][Data][Cr]

Data Min: 00 - Max: 64

Ack [g][ ][Set ID][ ][OK/NG][Data][x]

13. Sharpness (Command: k k)

▶ Adjusts the sharpness of the screen.

Transmission [k][k][ ][Set ID][ ][Data][Cr]

Data Min: 00 - Max: 64

Ack [k][ ][Set ID][ ][OK/NG][Data][x]

14. Brightness Stabilization (Command: m b)

▶ This adjusts the Brightness Stabilization feature.

Transmission [m][b][ ][Set ID][ ][Data][Cr]

Data 00: Off 01: On

Ack [b][ ][Set ID][ ][OK/NG][Data][x]

15. SUPER RESOLUTION+ (Command: m c)

▶ This controls the SUPER RESOLUTION+ feature.

Transmission [m][c][ ][Set ID][ ][Data][Cr]

Data 00: High 01: Middle
02: Low 03: Off

Ack [c][ ][Set ID][ ][OK/NG][Data][x]

16. Black Level (Command: m d)

▶ This controls the offset level (for HDMI only).

Transmission [m][d][ ][Set ID][ ][Data][Cr]

Data 00: High 01: Low

Ack [d][ ][Set ID][ ][OK/NG][Data][x]

17. HDMI ULTRA HD Deep Color (Command: m e)

▶ This controls the Ultra Deep Color feature. (HDMI only)

Transmission [m][e][ ][Set ID][ ][Data][Cr]

Data 00: On 01: Off

Ack [e][ ][Set ID][ ][OK/NG][Data][x]

18. DFC (Command: m f)

▶ This controls the DFC feature.

Transmission [m][f][ ][Set ID][ ][Data][Cr]

Data 00: On 01: Off

Ack [f][ ][Set ID][ ][OK/NG][Data][x]

19. Response Time (Command: m g)

▶ This controls the response time.

Transmission [m][g][ ][Set ID][ ][Data][Cr]

Data 00: Fast 01: Normal
02: Slow 03: Off

Ack [g][ ][Set ID][ ][OK/NG][Data][x]

20. Black Stabilizer (Command: m h)

▶ This controls the Black Stabilizer feature.

Transmission [m][h][ ][Set ID][ ][Data][Cr]

Data Min: 00 - Max: 64

Ack [h][ ][Set ID][ ][OK/NG][Data][x]

21. Uniformity (Command: m i)

▶ This controls the Uniformity Calibration feature.

Transmission [m][i][ ][Set ID][ ][Data][Cr]

Data 00: On 01: Off

Ack [i][ ][Set ID][ ][OK/NG][Data][x]

22. Gamma (Command: m j)

▶ This adjusts the Gamma settings.

Transmission [m][j][ ][Set ID][ ][Data][Cr]

Data 00: Gamma 1.8 01: Gamma 2.0
02: Gamma 2.2 03: Gamma 2.4
04: Gamma 2.6 05: DICOM Gamma Curve

Ack [j][ ][Set ID][ ][OK/NG][Data][x]

23. Color Temp (Command: k u)

▶ This adjusts the screen color temperature.

Transmission [k][u][ ][Set ID][ ][Data][Cr]

Data

00: Custom	01: 6500K
02: 8500K	03: 9300K
04: Manual	

Ack [u][ ][Set ID][ ][OK/NG][Data][x]

24. Red Gain (Command: j w)

▶ This adjusts the red gain.

Transmission [j][w][ ][Set ID][ ][Data][Cr]

Data Min: 00 - Max: 64

Ack [w][ ][Set ID][ ][OK/NG][Data][x]

25. Green Gain (Command: j y)

▶ This adjusts the green gain.

Transmission [j][y][ ][Set ID][ ][Data][Cr]

Data Min: 00 - Max: 64

Ack [y][ ][Set ID][ ][OK/NG][Data][x]

26. Blue Gain (Command: j z)

▶ This adjusts the blue gain.

Transmission [j][z][ ][Set ID][ ][Data][Cr]

Data Min: 00 - Max: 64

Ack [z][ ][Set ID][ ][OK/NG][Data][x]

27. Language (Command: f i)

▶ This adjusts the language of the OSD.

Transmission [f][i][ ][Set ID][ ][Data][Cr]

English - Korean (17 languages)

Ack [i][ ][Set ID][ ][OK/NG][Data][x]

28. SMART ENERGY SAVING (Command: m k)

▶ This adjusts the SMART ENERGY SAVING feature.

Transmission [m][k][ ][Set ID][ ][Data][Cr]

Data 00: High 01: Low
02: Off

Ack [k][ ][Set ID][ ][OK/NG][Data][x]

29. LED Control Button (Command: m l)

▶ Adjusts how long the control button LEDs remain lit.

Transmission [m][l][ ][Set ID][ ][Data][Cr]

Data 00: Always On 01: 20sec time out
02: 10sec time out 03: 5sec time out

Ack [l][ ][Set ID][ ][OK/NG][Data][x]

30. DVI Power Supply (Command: m m)

▶ This controls the DVI Power Supply feature.

Transmission [m][m][ ][Set ID][ ][Data][Cr]

Data 00: On 01: Off

Ack [m][ ][Set ID][ ][OK/NG][Data][x]

31. Auto Screen Off (Command: m n)

▶ This adjusts the time after which the screen turns off automatically when there are no monitor signals.

Transmission [m][n][ ][Set ID][ ][Data][Cr]

Data 00: On 01: Off

Ack [n][ ][Set ID][ ][OK/NG][Data][x]

32. DisplayPort 1.2 (Command: m o)

▶ This enables or disables DisplayPort 1.2.

Transmission [m][o][ ][Set ID][ ][Data][Cr]

Data 00: Enable 01: Disable

Ack [o][ ][Set ID][ ][OK/NG][Data][x]

33. OSD Lock (Command: k m)

▶ This controls the OSD Lock feature.

Transmission [k][m][ ][Set ID][ ][Data][Cr]

Data 00: Off 01: On

Ack [m][ ][Set ID][ ][OK/NG][Data][x]

34. Reset (Command: f k)

▶ This controls the reset operation.

Transmission [f][k][ ][Set ID][ ][Data][Cr]

Data 00: Picture Reset 01: Factory Reset
02: User Preset Reset

Ack [k][ ][Set ID][ ][OK/NG][Data][x]

35. Failover Input Switch (Command: k z)

▶ Controls the Failover Input Switch function.

Transmission [k][z][ ][Set ID][ ][Data][Cr]

Data

00: Off 01: On

Ack [z][ ][Set ID][ ][OK/NG][Data][x]

36. Main Input (Command: k v)

▶ Controls the input of the Failover Main.

Transmission [k][v][ ][Set ID][ ][Data][Cr]

Data

00: SDI 01: DVI

02: HDMI 03: DisplayPort

Ack [v][ ][Set ID][ ][OK/NG][Data][x]

37. Failover Input (Command: k w)

▶ Controls the input of the Failover.

Transmission [k][w][ ][Set ID][ ][Data][Cr]

Data

00: SDI 01: DVI

02: HDMI 03: DisplayPort

Ack [w][ ][Set ID][ ][OK/NG][Data][x]

To obtain the source code under GPL, LGPL, MPL, and other open source licenses, that is contained in this product, please visit *http://opensource.lge.com*.

In addition to the source code, all referred license terms, warranty disclaimers and copyright notices are available for download.

LG Electronics will also provide open source code to you on CD-ROM for a charge covering the cost of performing such distribution (such as the cost of media, shipping, and handling) upon email request to *opensource@lge.com*. This offer is valid for three (3) years from the date on which you purchased the product.

Read the Owner's Manual (CD) carefully and keep it at hand. Please note that the label attached to the product provides information for product support.

Model _____

Serial No. _____

Supplier's Declaration of Conformity

Trade Name	LG
Responsible Party	LG Electronics USA, Inc.
Address	111 Sylvan Avenue, North Building, Englewood Cliffs, NJ 07632
E-mail	lg.environmental@lge.com

WARNING: This equipment is compliant with Class A of CISPR 32. In a residential environment this equipment may cause radio interference.