OWNER'S MANUAL

CEILING FAN

Read this owner's manual thoroughly before operating the appliance and keep it handy for reference at all times.

TYPE: CEILING FAN

EN English

MFL70584101
Rev.01_032919

www.lg.com

Copyright © 2019 LG Electronics Inc. All Rights Reserved

TABLE OF CONTENTS

This manual may contain images or content different from the model you purchased.

This manual is subject to revision by the manufacturer.

SAFETY INSTRUCTIONS 3

IMPORTANT SAFETY INSTRUCTIONS.....3

PRODUCT OVERVIEW..... 10

Parts and Specifications.....10

OPERATION 12

Status Display Panel 12

Remote Controller 13

Using the Extra Function 15

SMART FUNCTIONS 16

Using LG SmartThinQ Application.....16

MAINTENANCE..... 18

Recommended Maintenance Schedule.....18

TROUBLESHOOTING 19

WARRANTY..... 20

SAFETY INSTRUCTIONS

The following safety guidelines are intended to prevent unforeseen risks or damage from unsafe or incorrect operation of the appliance.
The guidelines are separated into 'WARNING' and 'CAUTION' as described below.

This symbol is displayed to indicate matters and operations that can cause risk. Read the part with this symbol carefully and follow the instructions in order to avoid risk.

WARNING

This indicates that the failure to follow the instructions can cause serious injury or death.

CAUTION

This indicates that the failure to follow the instructions can cause the minor injury or damage to the product.

IMPORTANT SAFETY INSTRUCTIONS

WARNING

To reduce the risk of explosion, fire, death, electric shock, injury or scalding to persons when using this product, follow basic precautions, including the following:

Children in the Household

This appliance is not intended for use by persons (including children) with reduced physical, sensory or mental capabilities, or lack of experience and knowledge, unless they have been given supervision or instruction concerning use of the appliance by a person responsible for their safety. Children should be supervised to ensure that they do not play with the appliance.

Installation

- Electrical or installation work needs to be performed by a qualified service personnel.
- The replacement of parts of the safety suspension system device shall be performed by the manufacturer, its service agent or suitably qualified persons.
- Do not install the appliance less than 2.5 m from the ground and 1 m from the wall to the blades.
- Ensure that the ceiling hook can sustain more than 10 times the appliance weight.
- Ensure that the shaft has been fully tighten to motor shaft and shackle.
- Firmly tighten the blade screws using a screwdriver.
- Do not install the appliance in a place where flammable liquids or gases such as gasoline, propane, paint thinner, etc., are stored.
- Do not install the appliance somewhere exposed to direct sunlight.
- Do not install the appliance in an area prone to combustible gas leaks, grease, or metal dust.

Operation

- Connect this appliance as per the rated voltage and frequency printed on the name plate.
- Do not touch the power switch with wet hands.
- Do not disassemble, repair, modify or touch the appliance while it is operating.
- Do not insert hands or any objects into the appliance.
- Do not place any objects on the appliance.
- Do not use or store flammable or combustible substances (ether, benzene, alcohol, chemical, LPG, combustible spray, insecticide, air freshener, cosmetics, etc.) near the appliance.
- If there is a gas leakage (isobutane, propane, natural gas, etc.), do not touch the appliance or power switch and ventilate the area immediately.

- Cut off the power supply if there is any noise, smell, or smoke coming from the appliance.
- Do not expose the appliance to splashing water or rain.
- Do not touch, operate, or repair the appliance with wet hands.
- In case of flood, cut off the power switch and contact the LG Electronics customer service center.
- Dispose of all packaging materials (such as plastic bags and styrofoam) away from children. The packaging materials can cause suffocation.

Maintenance

- Before cleaning or performing maintenance, disconnect the power supply and wait until the blade stops.
- Do not use an abrasive cloth, sponge, or a metal brush to clean the appliance.

Battery

- A button/coin-shaped battery is used in the remote controller of the appliance. If you accidentally swallowed the battery, go to the doctor immediately for emergency treatment. If you fail to receive first aid within 2 hours after you swallowed it, you may experience damage to your internal organs or death in severe cases.
- Do not swallow the battery.
- If the battery tray is not secured firmly, stop using the appliance instantly and keep it away from children.
- Replace the all batteries in the remote controller with new ones of the same type. Do not mix old and new batteries or different types of batteries.

⚠ CAUTION

To reduce the risk of minor injury to persons, malfunction, or damage to the product or property when using this product, follow basic precautions, including the following:

Installation

- Do not install the appliance at a wet, high temperature, high humidity area, high vibration, windy places.
- Do not install the appliance in freezing temperature.
- Do not install the appliance on or near items that may be damaged or discolored by heat or humidity.
- Do not install the appliance near curtains.
- Do not install the appliance within 1 m of a TV or stereo equipment. It may cause interference.
- After installation make sure the appliance does not tremble extremely.

Operation

- Do not use the appliance in place of a vent hood. Doing so will shorten the appliance's lifespan.
- Do not operate in an area with unstable voltage, the appliance may automatically shut down to protect appliance components.
- This appliance is intended to be used in household and domestic applications only and must not be used for commercial purposes.

Maintenance

- Replace all the blades if any of them breaks or cracks.
- Never use strong cleaning agents or solvents when cleaning the appliance. Use a smooth cloth.
- Use a sturdy stool or ladder, when cleaning, maintaining or repairing the ceiling fan at height.

Battery

- Do not modify the battery arbitrarily.
- Misplaced battery may cause an explosion.
- Do not recharge or take apart the battery.
- Do not throw the battery in the fire for disposal or leave it near the heat.
- Remove and store the battery in a safe location if you don’t intend to use the remote controller for a long time.

Disposal of Your Old Appliance (as per e-waste Rules)

- When this crossed out wheeled bin symbol is depicted on the product and its operator's manual, it means the product is covered by the e-waste Management and Handling Rules, 2011 and are meant to be recycled, dismantled, refurbished or disposed off.
- Do's
  - a. The product is required to be handed over only to the authorized recycler for disposal.
  - b. Keep the product in isolated area, after it becomes non-functional/unrepairable so as to prevent its accidental breakage.
- Don't
  - a. The product should not be opened by the user himself/herself, but only by authorized service personnel.
  - b. The product is not meant for re-sale to any unauthorized agencies/scrap dealer/ kabariwalah.
  - c. The product is not meant for mixing into household waste stream.
  - d. Do not keep any replaced spare part(s) from the product in exposed area.
- Any disposal through unauthorized agencies/person will attract action under Environment (Protection) Act 1986.
- Hazards of improper handling or accidental breakage.
  - If batteries are disposed incorrectly, it can greatly harm the environment. The chemical byproducts are hazardous. The metals and chemicals found in batteries can mix into soil which may be hazardous to humans, plants and animals. If thrown in fire, they can cause blast and release toxic gases which may be harmful for health.
- This product is complied with the requirement of Hazardous Substances as specified under Rule 13 (1) & (2) of the E-Waste (Management & Handling) Rules, 2011.
- To locate a nearest collection centre or call for pick-up (limited area only) for disposal of this appliance, please contact Toll Free No. 1800-315-9999 / 1800-180-9999 for details. All collection centre and pick up facilities are done by third parties with LG Electronics India Pvt. Ltd. Merely as a facilitator. For more detailed information, please visit : http://www.lge.com/in

अपने पुराने निपटान के उपकरण (ई-अपशिष्ट नियम के अनुसार)

- जब इस काटे गए पहिये वाले बिन का चिन्ह किसी उपकरण और इसके ओपेरटर की पुस्तिका के साथ संलग्न होता है तो इसका मतलब है कि इसे "ई- अपशिष्ट" (प्रबंधन और हँथालन) नियम २०११ के अंतर्गत सम्मिलित किया गया है , और इसे नवीनीकरणकरन ,विघटन और निपटान के लिए बनाया गया है ।
- करें
  - क. उपकरण को सिर्फ अधिकृत पुनः नवीनीकरणकर्ता को ही निपतारण करने हेतु हस्तांतरित करें ।
  - ख. जब उपकरण कार्यरत न हो इसे अलग क्षेत्र में रखें ताकि उपकरण से होने वाली दुर्घटनाओ से बचा जा सके ।
- न कर
  - क. इस उपकरण को स्वयं/खुद नहीं खोलना चाहिए ! उपकरण को केवल अधिकृत अधिकारी के द्वारा ही खोला जाना चाहिए ।
  - ख. इस उपकरण को पुनः बिक्री के लिए किसी भी कबाड़ीवाला / भंगार-वाला / अनाधिकृत संस्था को न दें ।
  - ग. इस उपकरण को किसी घरेलू अपशिष्ट सामान के साथ मिलाकर न रखें ।
  - घ. उपकरण के बदले हुए या आतंरिक पुरजो को खुले क्षेत्र में न रखें ।
- यदि किसी अनाधिकृत विभाग या व्यक्ति के द्वारा निपटारन किया जाता है तो यह पर्यावरण (सुरक्षा) धारा १९८६ के अंतर्गत आता है ।
- दुर्घटना टूट / फूट अव्यवस्थित रख-रखाव से बचें।
  - यदि बैटरियों का निपटारन अशुद्ध रूप से कर रहे हैं, तो यह वातावरण को बहुत नुकसान पहुँचा सकता है। रासायनिक उपकरण खतरनाक होते हैं। जो रसायन और धातु बैटरियों में पाए जाते हैं। इसे मिटटी में मिलाने पर यह मनुष्यों, पौधों और पशुओं दसे लिए खतरनाक हो सकती है। यदि इसे आग में फेंकते हैं तो ये विस्फोट कर सकती है और ये जहरीली गैस दे सकती है जो स्वास्थ्य के लिए हानिकारक है.
- यह उत्पाद खतरनाक पदार्थों के लिए बनाये गए नियमांक १३ (१) और (२), ई -वेस्ट (प्रबन्द्धन और रखरखाव) नियम २०११ के क़ानून का पालन करता है.
- उपरोक्त पदार्थों के निपटारन के लिए नजदीकी निपटारन संसथान (संकीर्ण क्षेत्र) में कॉल करें। अधिक जानकारी के लिए हमारे टोल फ्री नंबर **1800-315-9999 / 1800-180-9999** पर कॉल करें. सभी संग्रहण केंद्र व पिक-अप की सुविधाएं किसी थर्ड- पार्टी जो **"LG Electronics India Pvt. Ltd."** को अपनी सेवाएं प्रदान कर रही हों, से करवाएं । ज्यादा जानकारी के लिए देखें वेब:साईट - **http://www.lge.com/in**

Parts and Specifications

Exterior

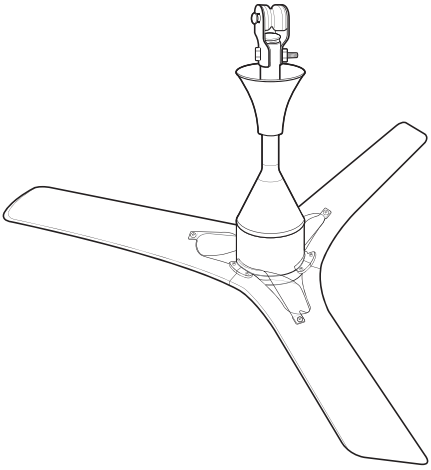

Parts

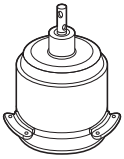

Motor Assembly

Guide (3ea)

Upper Cover

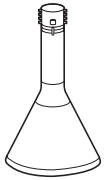

Lower Cover

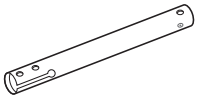

Shaft Assembly

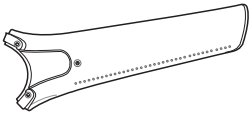

Blade Assembly (3ea)

Shackle Assembly

Bolt Assembly

Accessories

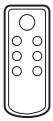

Remote Controller

Accessory Assembly

Owner’s Manual

Installation Manual

• The appearance or components of the appliance may differ depending on the model.

Specifications

Parameters	Values
Input Voltage	230 V
Rated Frequency	50 Hz
Sweep	1200 mm
Typical Speed	230 rpm
Typical Input Power	26.3 W
Service Value	7.6
Air Delivery	200 m^3/min.
Speed Control	Through Remote and Power Switch
Remote Battery	CR2025 3V
Weight	3.5 kg (Net)

NOTE

- Specified weight may differ from actual weight.

Status Display Panel

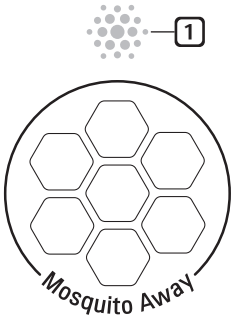

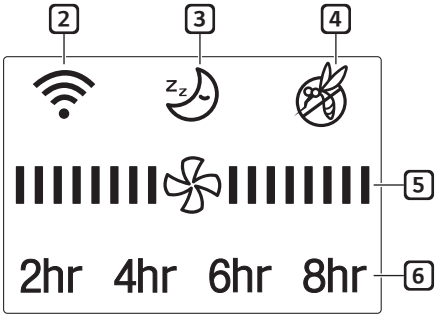

1 Receiver for Remote Controller Signal

Face the remote controller to the Receiver, the remote signal will pass through it.

2 Wi-Fi

When the appliance is connected to a Wi-Fi network, is displayed on the display screen.

3 Sleep Mode

When the sleep mode is selected, all display except the will be off after displaying for 3 seconds.

4 Mosquito Away

When the mosquito away function is working, is displayed on the display screen.

5 Fan Speed

Whenever press **Speed** button ( ) on the remote controller, fan speed will be changed.

6 Timer

Whenever press **Timer** button ( ) on the remote controller, the setting time will be changed.

2hr ➡ 4hr ➡ 6hr ➡ 8hr ➡ Off

NOTE

- Only when the functions operate, the display will light on.

Remote Controller

Inserting Battery

1 With the backside of the remote controller facing up, remove the battery tray from the remote controller.

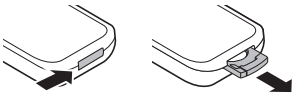

2 Insert the battery provided with the appliance to the tray.

- The (+) electrode of the battery must face upward.

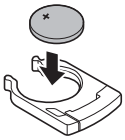

3 Insert the battery tray to the remote controller.

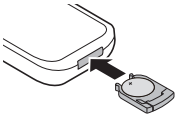

NOTE

- If the battery runs out of charge, replace it with a new one (CR2025).
- If the remote controller does not work as expected, try to replace the battery or check the polarity (+, -) of the battery. If the problem continues, contact the service centre.
- Dispose of the used battery according to the environmental regulations.

Remote Controller Features

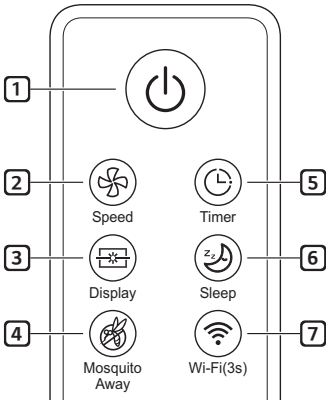

1 **Start/Stop**

2 **Speed**

Controls the fan speed.

3 **Display**

Turn on/off the display lightings.

4 **Mosquito Away**

Turn on/off the mosquito away function.

- Mosquito Away is turned on only when the fan is running.

5 **Timer**

Set time to power off.

6 **Sleep**

Turn on/off the sleep mode.

- When you enter sleep mode, the wind speed decreases by one step every hour. In case of “Speed1”, it is maintained.

7 **Wi-Fi**

Press this button during 3 seconds for paring. For unparing, press 3 seconds again.

- **Turning off Wi-Fi**
  - Press and hold the **Start/Stop** button and the **Wi-Fi** button at the same time for more than 3 seconds to turn off Wi-Fi. After finishing the product registration and while Wi-Fi is off, press and hold the **Wi-Fi** button for more than 3 seconds just once to turn on Wi-Fi and to control the product using the registered smartphone.

NOTE

- When operating the fan, you have to set up the regulator with 5 step (maximum) only.
- If you miss your remote controller, you can operate the fan by using wall switch on/off.
- The appearance or function of the remote controller may vary depending on the model.

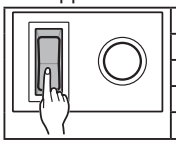

1 time	Return to previous step before you switch on/off.
2 times	Speed 1
3 times	Speed 2
4 times	Speed 3
5 times	Speed 4

Operating Method

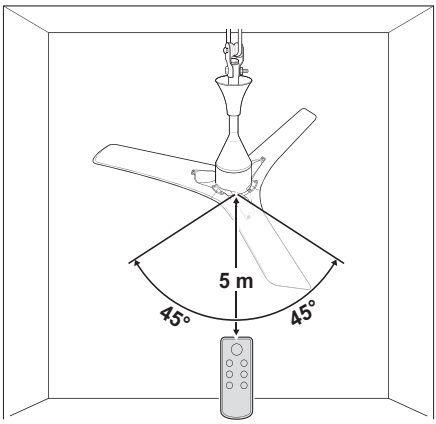

⚠ CAUTION

- Do not step on or apply pressure.
- Do not store or use near water or in high humidity.
- Do not store or use near an open flame or heating devices such as space heaters or ovens. Otherwise the battery could explode.

NOTE

- To use the remote controller, direct the signal sending area of the remote controller toward the signal reception area of the appliance.
- The remote works best within 5 m and 45° to the left or right of the sensor in front of the appliance.
- Pressing multiple buttons at the same time may cause the remote controller to malfunction.
- The remote controller may not work properly where there is a strong light, such as those from a 3-wave length fluorescent lamp or a neon sign.
- If you lost the remote controller, you can purchase a new one in a nearby service centre.

Using the Extra Function

Sleep Mode

Use the sleep mode to make more silent and display lighting off.

1 Press the **Start/Stop** button.

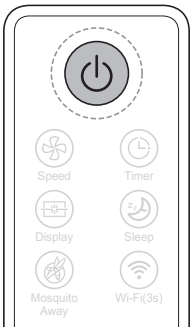

2 Press the **Sleep** button to select the Sleep mode.

NOTE

- After setting this mode, the fan speed will reduce next step automatically and to fan speed 1 finally.
- In Sleep mode, you can adjust the fan speed manually using the Speed button.
- The Sleep mode will be kept until pressing the Sleep button once.

Using LG SmartThinQ Application

Things to check before using LG SmartThinQ

- For appliances with the SmartThinQ logo

1 Check the distance between the appliance and the wireless router (Wi-Fi network).
   - If the distance between the appliance and the wireless router is too far, the signal strength becomes weak. It may take a long time to register or installation may fail.

2 Turn off the Mobile data or Cellular Data on your smartphone.
   - For iPhones, turn data off by going to **Settings** → **Cellular** → **Cellular Data**.

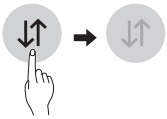

3 Connect your smartphone to the wireless router.

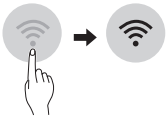

NOTE

- To verify the Wi-Fi connection, check that **Wi-Fi** icon on the control panel is lit.
- The appliance supports 2.4 GHz Wi-Fi networks only. To check your network frequency, contact your Internet service provider or refer to your wireless router manual.
- LG SmartThinQ is not responsible for any network connection problems or any faults, malfunctions, or errors caused by network connection.
- If the appliance is having trouble connecting to the Wi-Fi network, it may be too far from the router. Purchase a Wi-Fi repeater (range extender) to improve the Wi-Fi signal strength.
- The Wi-Fi connection may not connect or may be interrupted because of the home network environment.
- The network connection may not work properly depending on the Internet service provider.
- The surrounding wireless environment can make the wireless network service run slowly.
- The appliance cannot be registered due to problems with the wireless signal transmission. Unplug the appliance and wait about a minute before trying again.
- If the firewall on your wireless router is enabled, disable the firewall or add an exception to it.
- The wireless network name (SSID) should be a combination of English letters and numbers. (Do not use special characters.)
- Smartphone user interface (UI) may vary depending on the mobile operating system (OS) and the manufacturer.
- If the security protocol of the router is set to **WEP**, you may fail to set up the network. Please change it to other security protocols (**WPA2** is recommended) and register the product again.

Installing LG SmartThinQ

Search for the LG SmartThinQ application from the Google Play Store or Apple App Store on a smart phone. Follow instructions to download and install the application.

Wi-Fi Function

- For appliances with the Smart ThinQ logo

Communicate with the appliance from a smart phone using the convenient smart features.

Smart Diagnosis™

If you use the Smart Diagnosis function, you will be provided with the useful information such as a correct way of using the appliance based on the pattern of use.

Settings

Allows you to set various options on the appliance and in the application.

NOTE

- If you change your wireless router, Internet service provider, or password, delete the registered appliance from the LG SmartThinQ application and register it again.
- The application is subject to change for appliance improvement purposes without notice to users.
- Functions may vary by model.

Wireless LAN Module Specifications

Model	LCW-003
Frequency Range	2412 - 2472 MHz
Output Power (Max)	IEEE 802.11b: 10.30 mW/MHz IEEE 802.11g: 3.46 mW/MHz IEEE 802.11n: 3.13 mW/MHz

Open Source Software Notice

Information

To obtain the source code under GPL, LGPL, MPL, and other open source licenses, that is contained in this product, please visit http://opensource.lge.com.

In addition to the source code, all referred license terms, warranty disclaimers and copyright notices are available for download.

LG Electronics will also provide open source code to you on CD-ROM for a charge covering the cost of performing such distribution (such as the cost of media, shipping, and handling) upon email request to opensource@lge.com. This offer is valid for a period of three years after our last shipment of this product. This offer is valid to anyone in receipt of this information.

Smart Diagnosis™ Using a Smartphone

Use this function if you need an accurate diagnosis by an LG Electronics customer information centre when the appliance malfunctions or fails.

Smart Diagnosis™ can not be activated unless the appliance is connected to power. If the appliance is unable to turn on, then troubleshooting must be done without using Smart Diagnosis™.

NOTE

- Be sure to keep ambient noise to a minimum or the phone may not correctly receive the buzzer beeps from the appliance.

MAINTENANCE

⚠ CAUTION

- Do not spray water on or into appliance. Doing so will cause appliance failure.
- Do not bend the blade while cleaning.
- Do not use alkaline detergents to clean the appliance.
- Do not attach stickers or use sulfuric acid, hydrochloric acid, or organic solvents such as thinners, lamp oil, or acetone on the appliance's surface. Doing so may damage the surface.
- Wipe away dirt with a clean soft cloth, ordinary soap and water.

Recommended Maintenance Schedule

Parts	Frequency
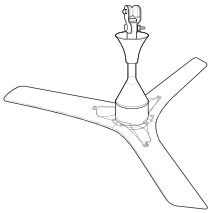 Ceiling Fan	Check and clean every one year.
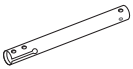 Shaft Assembly	Check any damage and stain every two years.
Shackle Assembly	Check any damage and stain every two years.
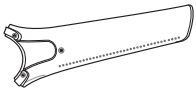 Blade Assembly	Keep the blades clean and check every month.
Guide	Keep the guides clean and check every month.

TROUBLESHOOTING

Before Calling for Service

Please check the following before you contact the service center. If the problem persists, contact your local service center.

Problem	Possible Causes	Solutions
When supply power but not power on, can't hear the beep.	Power is not supplied.	• Turn on the power switch.
Appliance is making noise.	Install location is too close to the wall or ceiling.	• Check the distance and reinstall at proper location.
	Installation is not good.	• Check each assemble parts are proper and firmly tightened.
Sleep lighting is flickering continuously.	Fan is locked.	• Use a regulator to turn off the power and turn on one minute later. • If the same problem occurs, power off and call to service center.
When press a button on remote controller, can't hear the beep.	Remote controller power is not supplied.	• Check the direction of remote controller battery or change it.
Remote controller is not working.	Too far to communicate with sensor.	• Move close to the appliance and try again.
Your home appliance and smartphone is not connected to the Wi-Fi network.	The password for the Wi-Fi that you are trying to connect to is incorrect.	• Find the Wi-Fi network connected to your smartphone and remove it, then register your appliance on LG SmartThinQ.
	Mobile data for your smartphone is turned on.	• Turn off the **Mobile** data of your smartphone and register the appliance using the Wi-Fi network.
	The wireless network name (SSID) is set incorrectly.	• The wireless network name (SSID) should be a combination of English letters and numbers. (Do not use special characters.)
	The router frequency is not 2.4 GHz.	• Only a 2.4 GHz router frequency is supported. Set the wireless router to 2.4 GHz and connect the appliance to the wireless router. To check the router frequency, check with your Internet service provider or the router manufacturer.
	The distance between the appliance and the router is too far.	• If the distance between the appliance and the router is too far, the signal may be weak and the connection may not be configured correctly. Move the location of the router so that it is closer to the appliance.

WARRANTY

The LG Ceiling Fan comes with 24 months warranty from the date of purchase of the product, provided always that the warranty card bears the rubber stamp, date and signature of our authorized dealer.

Terms & Condition

- The warranty is confined to the first purchaser of the Ceiling Fan only & is non-transferable.
- Installation, repairs and replacements will be carried out by the dealer (sales and service) from whom the product has been purchased, or through the authorized service center of LGEIL. In case the customer shifts the place of residence during warranty period. It is advised to call authorized service center directly or call our help line no's (toll free).
- Repairs under warranty shall be carried out by an authorized service personnel only. The details of centralized help lines are attached.
- For units installed beyond municipal limits of the jurisdiction of company's authorized service center, it is responsibility of the purchaser to contact the nearest authorized service center and bring the unit to the authorized service center at its own cost and risk. All expenses incurred in collecting the units or parts thereof from the company's authorized service center, as well as expenses incurred with deputizing of service personnel/technicians towards conveyance and other incidentals etc. will be borne by the customer. Local charges for transportation and handling charges may vary from location to location. Customers are advised to verify before. In case the customer desires to bring the unit on its own to the authorized service center, the same shall be at its own risks & consequences.
- The concerned authorized service center will advise the customer whether to effect the repairs at site or at the authorized service center.
- Call registered with the centralized helpline wherein only cleaning of the unit/parts in the unit due to dust accumulation on portions of the unit, are not to be considered as defects.
- The company reserves the right to withdrawal this offer at its sole direction at any point of time.
- In case of repairs or replacement of any parts of the unit, this warranty will thereafter continue and remain in force only for the unexpired period of the warranty. Replacement of parts would be purely at the discretion of LGEIL alone. In case the replacement of the entire unit is being made, (subject to the sole discretion of LGEIL), the same model shall be replaced and in the event such model has been discontinued, it shall be replaced with the model of price equivalent at the time of purchase.
- In case of any damage to the product/customer abuse / repairs by un-authorised personnels / misuse detected / by the authorized service center personnel, the warranty conditions are not applicable and repairs will be done subject to availability of parts and on a chargeable basis only.
- It is the sole responsibility of the customer to provide necessary support to the company if the unit to be installed is not suitable for the installer or service engineer to reach.
- The 24 months warranty is applicable on the product only.
- This warranty shall not cover any consequential or resulting liability, damage or loss to property or life arising directly or indirectly out of any defect in the Ceiling Fan. The company's obligation under this warranty shall be limited to repair or providing replacment of defective parts only under the warranty period.
- The company or its authorized service center reserves the right to retain any parts or component replaced at its discretion, in the event of a defect being noticed in the equipment during warranty period.
- While the company will make every effort to carry out repairs at the earliest, it however is made explicitly clear that the company is under no obligation to do so in a specified period of time.
- Warranty does not cover accessories external to the equipment supplied by the dealer.

- If any coloured internal or external components are replaced, there will be commitment to ensure that the shades match with the original or other components. The replaced shades, patterns, tints may vary from the customer's unit due to continuous usage of the unit. Any matching components changed at customer's request will be on chargeable basis except the component which actually needed.
- The unit shall be operated with variation of ± 10 % of rated voltage at 50 Hz.

This warranty is not applicable in any of the following cases;

- The warranty card is not completed properly at the time of purchase.
- The purchase made before 1st Jan 2019.
- The completed warranty card is not presented to LG authorized service personnel at the time of service of the product.
- The product is not operated according to instructions given in the operating instructions booklet.
- Defects are caused by improper or reckless use, which shall be determined by the company personnel.
- Any repair work is carried out by persons other than authorized service personnel.
- Defects are caused by due to causes beyond control like lightening, abnormal voltage, mains supply meter bypass (illegal connection), acts of God or while in transit to service center or purchaser's residence.
- The warranty is not valid in case, the serial number is deleted, defected or altered. Damage to the product or any parts due to transportation or shifting is not covered by warranty.
- This warranty will automatically terminate on the expiry of the warranty period of 24 months, even if the Ceiling Fan may not be in use for any time during the warranty period for any reason.
- Only courts in state of Delhi and places where LGEIL has its branch office shall have the jurisdiction for setting any claims, disputes arising under the warranty.

Memo

Customer's Copy

LG
Life's Good

Name of Purchaser _____

Invoice No. & Date _____

Model _____

Serial No. _____

Name & Address of the Seller
(LG / Authorised Dealer) _____

_____

Dealer's Copy

LG
Life's Good

Name of Purchaser _____

Invoice No. & Date _____

Model _____

Serial No. _____

Name & Address of the Seller
(LG / Authorised Dealer) _____

_____

LG
Life's Good

LG 24 x 7 CUSTOMER CARE
CALL 1800-315-9999
1800-180-9999
(Toll Free)
SMS 5757554
(Send SMS)
CLICK www.lg.com/in/support
www.facebook.com/lgindiapage
www.twitter.com/LGIndiaTweets
To know more about LG, visit www.lg.com/in
For Corporate/Institutional enquiries,
please write to corp.enquiries@lge.com
Regd. Office: LG Electronics India Pvt. Ltd., A Wing (3rd Floor), D-3, District Center, Saket, New Delhi-110017